Multi-Sector General Permit (MSGP) Compliance Notebook

Prepared for **Provincetown Municipal Airport**

March 2019 SWPPP/SPCCP

Prepared in accordance with

2015 Multi-Sector General Permit (MSGP)

For Stormwater Discharges Associated with Industrial Activity

COMPLIANCE NOTEBOOK

Table of Contents

Section 1	Notice of Intent and EPA Correspondence
Section 2	Stormwater Pollution Prevention Plan (SWPPP), and Spill Prevention, Control, and Countermeasures Plan (SPCCP)
Section 3	Blank Inspection Forms for Provincetown Municipal Airport
Section 4	EPA 2015 Multi-Sector General Permit (MSGP)

SECTION 1: **Notice of intent, and EPA Correspondence**

MSGP Home Page / Provincetown Municipal Airport

Provincetown Municipal Airport

Facility Name: Provincetown Municipal Airport
Operator Name: Town of Provincetown
My Assigned Permissions: View, Edit

- Details (JavaScript:)
- View User Permissions (JavaScript:)
- Return to Home

Details

NPDES FORM 3510-6	EPA	UNITED STATES ENVIRONMENTAL PROTECTION AGENCY WASHINGTON, DC 20460 NOTICE OF INTENT (NOI) FOR STORMWATER DISCHARGES ASSOCIATED WITH INDUSTRIAL ACTIVITY UNDER THE NPDES MULTI-SECTOR GENERAL PERMIT	FORM Approved OMB No. 2040-0004

Permit Information

Master Permit Number MAR050000

NPDES ID:

Eligibility Information

State/territory where your facility is located: MA

Is your facility located on Indian Country lands? No

Are you a *"Federal Operator"* as defined in Appendix A (https://www.epa.gov/sites/production/files/2015-10/documents/msgp2015_appendixa.pdf)?

No

Are you requesting a "no exposure" exclusion from permitting under 40 CFR 122.26(g)?

No

By indicating "Yes", I confirm that I understand that the MSGP only authorizes the allowable stormwater discharges in Part 1.1.2 and the allowable non-stormwater discharges listed in Part 1.1.3. Any discharges not expressly authorized in this permit cannot become authorized or shielded from liability under CWA section 402(k) by disclosure to EPA, state, or local authorities after issuance of this permit via any means, including the Notice of Intent (NOI) to be covered by the permit, the Stormwater Pollution Prevention Plan (SWPPP), during an inspection, etc. If any discharges requiring NPDES permit coverage other than the allowable stormwater and non-stormwater discharges listed in Parts 1.1.2 and 1.1.3 will be discharged, they must be covered under another NPDES permit.

Yes

Are you a new discharger or a new source as defined in Appendix A (https://www.epa.gov/sites/production/files/2015-10/documents/msgp2015_appendixa.pdf)?

No

Have stormwater discharges from your facility been covered previously under an NPDES permit?

Yes

Most current NPDES ID (i.e., permit tracking number) if you had coverage under EPA's MSGP 2008 or the NPDES permit number if you had coverage under an EPA individual permit:

MAR05EB45

Are you discharging to any waters of the U.S. that are designated by the state or tribal authority under its antidegradation policy as a Tier 3 water (Outstanding National Resource water)? (See Appendix L (https://www.epa.gov/sites/production/files/2015-10/documents/msgp2015_appendixl.pdf))

No

Does your facility directly discharge to a Federal CERCLA site listed in Appendix P (https://www.epa.gov/sites/production/files/2015-10/documents/msgp2015_appendixp.pdf)?

No

Facility Operator Information

Operator Information

Operator Name (Organization Name): Town of Provincetown

Operator Mailing Address:

Address Line 1: 260 Commercial Street

Address Line 2:

City: Provincetown

ZIP/Postal Code: 02657

State: MA

County or Similar Division: BARNSTABLE

Operator Point of Contact Information

First Name Middle Initial Last Name: Arthur Lisenby

Organization:

Title: Airport Operator

Phone: 508-487-0241 **Ext.** 2

Email: butchpvc@hotmail.com

NOI Preparer Information

First Name Middle Initial Last Name: Shilpa Sen

Organization: Jacobs Engineering

Phone: 617-532-4387 **Ext.**

Email: shilpa.sen@jacobs.com

Facility Information

Facility Information

Facility Name: Provincetown Municipal Airport

Address Line 1: 176 Race Point Road

Address Line 2:

City: Provincetown

ZIP/Postal Code: 02657

State: MA

County or Similar Division: BARNSTABLE

Latitude/Longitude for the facility

Latitude/Longitude:
42.0419°N, 70.1317°W

Latitude/Longitude Data Source:
Airport Reference Points

Horizontal Reference Datum: NAD 83

Is your facility located on Indian Country lands? No

Are you requesting coverage under this NOI as a *"Federal Operator"* as defined in Appendix A (https://www.epa.gov/sites/production/files/2015-10/documents/msgp2015_appendixa.pdf)?

No

What is the ownership type of the facility? Municipality

Estimated area of industrial activity at your facility exposed to stormwater:

3.75 (to the nearest quarter acre)

Sector Specific Information

Primary Sector: S

Primary Subsector: S1

Primary SIC Code: 4581

If you are a Sector S (Air Transportation) facility, do you anticipate using more than 100,000 gallons of pure glycol in glycol-based deicing fluids and/or 100 tons or more of urea on an average annual basis?

No

Is your facility presently inactive and unstaffed? No

Discharge Information

By indicating "Yes" below, I confirm that I understand that the MSGP only authorizes the allowable stormwater discharges in Part 1.1.2 and the allowable non-stormwater discharges listed in Part 1.1.3. Any discharges not expressly authorized in this permit cannot become authorized or shielded from liability under CWA section 402(k) by disclosure to EPA, state, or local authorities after issuance of this permit via any means, including the Notice of Intent (NOI) to be covered by the permit, the Stormwater Pollution Prevention Plan (SWPPP), during an inspection, etc. If any discharges requiring NPDES permit coverage other than the allowable stormwater and non-stormwater discharges listed in Parts 1.1.2 and 1.1.3 will be discharged, they must be covered under another NPDES permit.

Yes

Federal Effluent Limitation Guidelines:

Identify the Effluent Limitation Guideline(s) that apply to your stormwater discharges.

40 CFR Part/Subpart	Eligible Discharges	Affected MSGP Sector	New Source Date	Applicability
Part 449	Existing and new primary airports with1,000 or more annual jet departures that discharge wastewater associated with airfield pavement deicing that contains urea commingled with stormwater	S	06/15/2012	**Does your facility have any discharges subject to this effluent limitation guideline?** No

Are you requesting permit coverage for any stormwater discharges subject to effluent limitation guidelines?

No

Benchmark Monitoring:

Are you subject to benchmark monitoring requirements for a hardness-dependent metal?

No

Other Discharge Information:

Does your facility discharge into a Municipal Separate Sewer System (MS4)? No

Are you discharging to any waters of the U.S. that are designated by the state or tribal authority under its antidegradation policy as a Tier 3 water (Outstanding National Resource Water) (See Appendix L (https://www.epa.gov/sites/production/files/2015-10/documents/msgp2015_appendixl.pdf))?

No

Does your facility directly discharge to a Federal CERCLA site listed in Appendix P (https://www.epa.gov/sites/production/files/2015-10/documents/msgp2015_appendixp.pdf)?

No

Receiving Waters Information

List all of the stormwater outfalls from your facility.

Outfall 001: Outfall#1 is a 12” Concrete pipe with sedimentation trap and receives stormwater from the trench drain adjacent to the ARFF/SRE building and catch basin in front of the garage.

Applicable Sectors

Select the Sectors/Subsector(s) that apply to this outfall.

	Sector	Subsector
☑	**S** - AIR TRANSPORTATION FACILITIES	**S1** - Air Transportation Facilities

Latitude/Longitude:
42.4343°N, 70.1258°W

Is this outfall *Substantially Identical* to an existing outfall?

Receiving Water

GNIS Name:
n/a

Waterbody Name:
Groundwater-fed isolated vegetated wetlands; Hatches Harbor

Listed Water ID:
n/a

Is this receiving water designated by the state or tribal authority under its antidegradation policy as a Tier 2 (or Tier 2.5) water (water quality exceeds levels necessary to support propagation of fish, shellfish, and wildlife and recreation in and on the water)?

No

Is the receiving water listed as impaired on the 303(d) list and in need of a TMDL?

No

Has a TMDL been completed for this receiving waterbody? No

Outfall 002: Outfall#2 is an existing 6” corrugated metal pipe and receives stormwater from the catch basin close to the TSA trailer.

Applicable Sectors

Select the Sectors/Subsector(s) that apply to this outfall.

	Sector	Subsector
☑	**S** - AIR TRANSPORTATION FACILITIES	**S1** - Air Transportation Facilities

Latitude/Longitude:
42.4335°N, 70.132°W

Is this outfall *Substantially Identical* to an existing outfall?

Receiving Water

GNIS Name:	Waterbody Name:	Listed Water ID:
n/a	Groundwater-fed isolated vegetated wetlands; Hatches Harbor	n/a

Is this receiving water designated by the state or tribal authority under its antidegradation policy as a Tier 2 (or Tier 2.5) water (water quality exceeds levels necessary to support propagation of fish, shellfish, and wildlife and recreation in and on the water)?

No

Is the receiving water listed as impaired on the 303(d) list and in need of a TMDL?

No

Has a TMDL been completed for this receiving waterbody? No

SWPPP Information

Has the Stormwater Prevention Plan (SWPPP) been prepared in advanced of filing this NOI, as required?

Yes

SWPPP Contact Information:

First Name Middle Initial Last Name: Arthur Lisenby

Organization:
Provincetown Municipal Airport

Title: Airport Operator

Phone: 508-487-0241 **Ext.** 2

Email: butchpvc@hotmail.com

SWPPP Availability:

Your current SWPPP or certain information from your SWPPP must be made available through one of the following two options. Select one of the options and provide the required information:

☑ **Option 2: Provide the following information from your SWPPP:**

A. Describe your onsite industrial activities exposed to stormwater and potential spill and leak areas.

```
Aircraft Fueling
Vehicle Fueling
Aircraft Deicing
Aircraft Maintenance
Material Storage
Preflight checks
AVGAS Delivery
Heating Oil Delivery
Diesel Fuel Delivery
```

B. List the pollutants(s) or pollutant constituent(s) associated with each industrial activity exposed to stormwater that could be discharged in stormwater and/or in any authorized non-stormwater discharges listed in Part 1.1.3.

```
Industrial Activity     Associated Pollutants
Aircraft Fueling
Vehicle Fueling AVGAS
Vehicles fueled at off-site town facility
Aircraft Deicing        Type 1 Propylene glycol
Aircraft Maintenance    Oils/Lubricants
Material Storage        Cleaning Fluids
Preflight checks        AVGAS
AVGAS Delivery  AVGAS
Heating Oil Delivery    No. 2 Heating Oil
Diesel Fuel Delivery    Diesel Oil
```

C. Describe the control measures you will employ to comply with the non-numeric technology-based effluent limits required in Part 2.1.2 and Part 8, and any other measures taken to comply with the requirements in Part 2.2 Water Quality-Based Effluent Limitations (see Part 5.2.4).

Control measures that are included under “Minimi
ze Exposure" are measures that generally prevent
contaminants from coming in contact with stormwa
ter. At the Airport, materials storage and relat
ed activities are located inside the hangar and
ARFF/SRE building.
Fueling and deicing operations are activities th
at must be conducted outside. However, deicing f
or Cape Air flights is minimized by storing airc
raft overnight in the hangar, prior to scheduled
flights.
Aircraft are not washed at the Airport.
During preflight checks, pilot sump their fuel t
anks to clear any water settling in the tanks an
d put the slumped fuel in a one-gallon gasoline
tank for use with maintenance equipment. Therefo
re, all slumped fuel during preflight checks is
recycled and used.

D. Provide a schedule for good housekeeping and maintenance (see Part 5.2.5.1) and a schedule for all inspections required in Part 4 (see Part 5.2.5.2).

The following Good Housekeeping measures are conducted at the Airport:

- Good housekeeping and site maintenance is practiced by all employees and tenants of the facility.
- Working and storage areas are maintained on the site in a clean and orderly manner.
- All solvents, cleaners, de-greasers, paints, lubricants and similar type liquids are kept in plainly labeled closed storage containers with secondary containments inside the Hangar and ARFF/SRE buildings. There is no outside storage of any such products.
- Provide appropriate storage for waste oil and related products with secondary containment and regular removal by contract waste haulers.
- Dumpsters for trash and recyclables are kept inside the hangar and there is regularly scheduled trash pickup.

The Airport has control measures in place for maintenance purposes. The floor drain in the Hangar has been filled with concrete and disabled; oils and fuels are stored in secondary containment areas, and deicing is done by trained personnel on the terminal apron. The deicing at the Airport is minimal. No major maintenance is performed at the Airport. Any preventive maintenance is accomplished with spill controls in place to prevent excessive discharge.

Good Housekeeping occurs routinely and on an as-needed basis. Procedures are same as previously discussed in section 3.1.2. The schedules are in line with routine facility inspection as they are conducted at least quarterly, once for each of the periods listed:
January 1-March 31 (monthly if deicing)
April 1-June 30
July 1-September
October 1-December 31 (monthly if deicing)

Endangered Species Protection

Using the instructions in Appendix E (https://www.epa.gov/sites/production/files/2015-10/documents/msgp2015_appendixe-2.pdf) of the MSGP, under which endangered species criterion listed in Part 1.1.4.5 are you eligible for coverage under this permit?

Criterion A - No listed species of critical habitat are in the action area

Provide a brief summary of the basis for the criterion selected in Appendix E (https://www.epa.gov/sites/production/files/2015-10/documents/msgp2015_appendixe-2.pdf):

There are no federally listed or proposed endangered or threatened species that have been identified at the Airport. However, the NPS (land-owner) has indicated that the Park Service treats all State-listed species the same as any Federally-Threatened or Endangered species. The Airport is mapped for four State-listed rare species: Eastern Box Turtle, Eastern Spadefoot Toad, Vesper Sparrow, and Broom Crowberry.

Coordination has taken place with NPS staff and staff of the MA NHESP to determine potential impacts and mitigation for proposed improvements at the Airport as documented in the 2018 Environmental Assessment (included by reference). Several wildlife surveys were conducted to identify habitat areas at the airport. As part of that coordination, pavement reconstruction and upgrades to the stormwater system were reviewed and approved by the NHESP as having no impact to state-listed species habitat.

Therefore, the Airport would meet the Criterion A (according to the 2015 MSGP, Part 1.1.4.5): No federaly-listed (and no state-listed) species or protected habitat are likely to occur in the “action area" (area affected directly or indirectly) as defined in the MSGP.

Historic Preservation

Is your facility located on a property of religious or cultural significance to an Indian tribe?

No

Using the instructions in Appendix F (https://www.epa.gov/sites/production/files/2015-10/documents/msgp2015_appendixf.pdf) of the MSGP, under which historic properties preservation criterion listed in Part 1.1.4.6 are you eligible for coverage under this permit?

Criterion B - Subsurface stormwater controls will not affect historic properties

Certification Information
Form has not been certified yet.

From: donotreply@epa.gov
Sent: Friday, March 1, 2019 2:30 PM
To: donotreply@epa.gov
Subject: [EXTERNAL] EPA MSGP Coverage Status Change
Attachments: cors.zip

Categories: Important

2019-03-01

Dear NeT User,

Coverage status has changed for a facility under the MAR050000 general permit.

NPDES ID	Form Type	Coverage Status	Operator	Facility Name	EPA Comment
MAR05J00F	NOI	Active	Town of Provincetown	Provincetown Municipal Airport	

If you have questions about this email or about NeT MSGP, please refer to the NeT Help Center at https://epanet.zendesk.com/hc/en-us/categories/202566467 or e-mail NPDESereporting@epa.gov for assistance.

This is an automated notification; please do not reply to this email.

NPDES FORM 3510-6	EPA	UNITED STATES ENVIRONMENTAL PROTECTION AGENCY WASHINGTON, DC 20460 NOTICE OF INTENT (NOI) FOR STORMWATER DISCHARGES ASSOCIATED WITH INDUSTRIAL ACTIVITY UNDER THE NPDES MULTI-SECTOR GENERAL PERMIT	FORM Approved OMB No. 2040-0004

Permit Information

Master Permit Number MAR050000

NPDES ID: MAR05J00F

Eligibility Information

State/territory where your facility is located: MA

Is your facility located on Indian Country lands? No

Are you a *"Federal Operator"* as defined in Appendix A (https://www.epa.gov/sites/production/files/2015-10/documents/msgp2015_appendixa.pdf)? No

Are you requesting a "no exposure" exclusion from permitting under 40 CFR 122.26(g)? No

By indicating "Yes", I confirm that I understand that the MSGP only authorizes the allowable stormwater discharges in Part 1.1.2 and the allowable non-stormwater discharges listed in Part 1.1.3. Any discharges not expressly authorized in this permit cannot become authorized or shielded from liability under CWA section 402(k) by disclosure to EPA, state, or local authorities after issuance of this permit via any means, including the Notice of Intent (NOI) to be covered by the permit, the Stormwater Pollution Prevention Plan (SWPPP), during an inspection, etc. If any discharges requiring NPDES permit coverage other than the allowable stormwater and non-stormwater discharges listed in Parts 1.1.2 and 1.1.3 will be discharged, they must be covered under another NPDES permit.

Yes

Are you a new discharger or a new source as defined in Appendix A (https://www.epa.gov/sites/production/files/2015-10/documents/msgp2015_appendixa.pdf)? No

Have stormwater discharges from your facility been covered previously under an NPDES permit? Yes

Most current NPDES ID (i.e., permit tracking number) if you had coverage under EPA's MSGP 2008 or the NPDES permit number if you had coverage under an EPA individual permit:

MAR05EB45

Are you discharging to any waters of the U.S. that are designated by the state or tribal authority under its antidegradation policy as a Tier 3 water (Outstanding National Resource water)? (See Appendix L (https://www.epa.gov/sites/production/files/2015-10/documents/msgp2015_appendixl.pdf))

No

Does your facility directly discharge to a Federal CERCLA site listed in Appendix P (https://www.epa.gov/sites/production/files/2015-10/documents/msgp2015_appendixp.pdf)? No

Facility Operator Information

Operator Information

Operator Name (Organization Name): Town of Provincetown

Operator Mailing Address:

Address Line 1: 260 Commercial Street

Address Line 2:

City: Provincetown

ZIP/Postal Code: 02657

State: MA

County or Similar Division: BARNSTABLE

Operator Point of Contact Information

First Name Middle Initial Last Name: Arthur Lisenby

Organization:

Title: Airport Operator

Phone: 508-487-0241 **Ext.** 2

Email: butchpvc@hotmail.com

NOI Preparer Information

First Name Middle Initial Last Name: Shilpa Sen

Organization: Jacobs Engineering

Phone: 617-532-4387 **Ext.**

Email: shilpa.sen@jacobs.com

Facility Information

Facility Information

Facility Name: Provincetown Municipal Airport

Address Line 1: 176 Race Point Road

Address Line 2:

City: Provincetown

ZIP/Postal Code: 02657

State: MA

County or Similar Division: BARNSTABLE

Latitude/Longitude for the facility

Latitude/Longitude: 42.0419°N, 70.1317°W

Latitude/Longitude Data Source: Airport Reference Points

Horizontal Reference Datum: NAD 83

Is your facility located on Indian Country lands? No

Are you requesting coverage under this NOI as a *"Federal Operator"* as defined in Appendix A (https://www.epa.gov/sites/production/files/2015-10/documents/msgp2015_appendixa.pdf)?

No

What is the ownership type of the facility? Municipality

Estimated area of industrial activity at your facility exposed to stormwater: 3.75 (to the nearest quarter acre)

Sector Specific Information

Primary Sector: S

Primary Subsector: S1

Primary SIC Code: 4581

If you are a Sector S (Air Transportation) facility, do you anticipate using more than 100,000 gallons of pure glycol in glycol-based deicing fluids and/or 100 tons or more of urea on an average annual basis?

No

Is your facility presently inactive and unstaffed? No

Discharge Information

By indicating "Yes" below, I confirm that I understand that the MSGP only authorizes the allowable stormwater discharges in Part 1.1.2 and the allowable non-stormwater discharges listed in Part 1.1.3. Any discharges not expressly authorized in this permit cannot become authorized or shielded from liability under CWA section 402(k) by disclosure to EPA, state, or local authorities after issuance of this permit via any means, including the Notice of Intent (NOI) to be covered by the permit, the Stormwater Pollution Prevention Plan (SWPPP), during an inspection, etc. If any discharges requiring NPDES permit coverage other than the allowable stormwater and non-stormwater discharges listed in Parts 1.1.2 and 1.1.3 will be discharged, they must be covered under another NPDES permit.

Yes

Federal Effluent Limitation Guidelines:

Identify the Effluent Limitation Guideline(s) that apply to your stormwater discharges.

40 CFR Part/Subpart	Eligible Discharges	Affected MSGP Sector	New Source Date	Applicability
Part 449	Existing and new primary airports with 1,000 or more annual jet departures that discharge wastewater associated with airfield pavement deicing that contains urea commingled with stormwater	S	06/15/2012	**Does your facility have any discharges subject to this effluent limitation guideline?** No

Are you requesting permit coverage for any stormwater discharges subject to effluent limitation guidelines? No

Benchmark Monitoring:

Are you subject to benchmark monitoring requirements for a hardness-dependent metal? No

Other Discharge Information:

Does your facility discharge into a Municipal Separate Sewer System (MS4)? No

Are you discharging to any waters of the U.S. that are designated by the state or tribal authority under its antidegradation policy as a Tier 3 water (Outstanding National Resource Water) (See Appendix L (https://www.epa.gov/sites/production/files/2015-10/documents/msgp2015_appendixl.pdf))?

No

Does your facility directly discharge to a Federal CERCLA site listed in Appendix P (https://www.epa.gov/sites/production/files/2015-10/documents/msgp2015_appendixp.pdf)? No

Receiving Waters Information

List all of the stormwater outfalls from your facility.

Outfall 001: Outfall#1 is a 12" Concrete pipe with sedimentation trap and receives stormwater from the trench drain adjacent to the ARFF/SRE building and catch basin in front of the garage.

Applicable Sectors

Select the Sectors/Subsector(s) that apply to this outfall.

	Sector	Subsector
☑	**S** - AIR TRANSPORTATION FACILITIES	**S1** - Air Transportation Facilities

Latitude/Longitude: 42.4343°N, 70.1258°W

Is this outfall *Substantially Identical* to an existing outfall?

Receiving Water

GNIS Name:
n/a

Waterbody Name:
Groundwater-fed isolated vegetated wetlands; Hatches Harbor

Listed Water ID:
n/a

Is this receiving water designated by the state or tribal authority under its antidegradation policy as a Tier 2 (or Tier 2.5) water (water quality exceeds levels necessary to support propagation of fish, shellfish, and wildlife and recreation in and on the water)?

No

Is the receiving water listed as impaired on the 303(d) list and in need of a TMDL? No

Has a TMDL been completed for this receiving waterbody? No

Outfall 002: Outfall#2 is an existing 6" corrugated metal pipe and receives stormwater from the catch basin close to the TSA trailer.

Applicable Sectors

Select the Sectors/Subsector(s) that apply to this outfall.

	Sector	Subsector
☑	**S** - AIR TRANSPORTATION FACILITIES	**S1** - Air Transportation Facilities

Latitude/Longitude: 42.4335°N, 70.132°W

Is this outfall *Substantially Identical* to an existing outfall?

Receiving Water

GNIS Name:
n/a

Listed Water ID:
n/a

Waterbody Name:
Groundwater-fed isolated vegetated wetlands; Hatches Harbor

Is this receiving water designated by the state or tribal authority under its antidegradation policy as a Tier 2 (or Tier 2.5) water (water quality exceeds levels necessary to support propagation of fish, shellfish, and wildlife and recreation in and on the water)?
No

Is the receiving water listed as impaired on the 303(d) list and in need of a TMDL? No

Has a TMDL been completed for this receiving waterbody? No

SWPPP Information

Has the Stormwater Prevention Plan (SWPPP) been prepared in advanced of filing this NOI, as required? Yes

SWPPP Contact Information:

First Name Middle Initial Last Name: Arthur Lisenby

Organization: Provincetown Municipal Airport

Title: Airport Manager

Phone: 508-487-0241 **Ext.** 2

Email: butchpvc@hotmail.com

SWPPP Availability:
Your current SWPPP or certain information from your SWPPP must be made available through one of the following two options. Select one of the options and provide the required information:

☑ **Option 2: Provide the following information from your SWPPP:**

A Describe your onsite industrial activities exposed to stormwater and potential spill and leak areas.

Aircraft Fueling
Vehicle Fueling
Aircraft Deicing
Aircraft Maintenance
Material Storage
Preflight checks
AVGAS Delivery
Heating Oil Delivery
Diesel Fuel Delivery

B. List the pollutants(s) or pollutant constituent(s) associated with each industrial activity exposed to stormwater that could be discharged in stormwater and/or in any authorized non-stormwater discharges listed in Part 1.1.3.

Industrial Activity Associated Pollutants
Aircraft Fueling
Vehicle Fueling AVGAS
Vehicles fueled at off-site town facility
Aircraft Deicing Type 1 Propylene glycol
Aircraft Maintenance Oils/Lubricants
Material Storage Cleaning Fluids
Preflight checks AVGAS
AVGAS Delivery AVGAS
Heating Oil Delivery No. 2 Heating Oil
Diesel Fuel Delivery Diesel Oil

C. Describe the control measures you will employ to comply with the non-numeric technology-based effluent limits required in Part 2.1.2 and Part 8, and any other measures taken to comply with the requirements in Part 2.2 Water Quality-Based Effluent Limitations (see Part 5.2.4).

Control measures that are included under "Minimize Exposure" are measures that generally prevent contaminants from coming in contact wi th stormwater. At the Airport, materials storage and related activities are located inside the hangar and ARFF/SRE building.
Fueling and deicing operations are activities that must be conducted outside. However, deicing for Cape Air flights is minimized by storing ai rcraft overnight in the hangar, prior to scheduled flights.
Aircraft are not washed at the Airport.
During preflight checks, pilots sump their fuel tanks to clear any water settling in the tanks and put the slumped fuel in a one-gallon gasoline tank for use with maintenance equipment. Therefore, all slumped fuel during preflight checks is recycled and used.

D. Provide a schedule for good housekeeping and maintenance (see Part 5.2.5.1) and a schedule for all inspections required in Part 4 (see Part 5.2.5.2).

The following Good Housekeeping measures are conducted at the Airport:
• Good housekeeping and site maintenance is practiced by all employees and tenants of the facility.
• Working and storage areas are maintained on the site in a clean and orderly manner.
• All solvents, cleaners, de-greasers, paints, lubricants and similar type liquids are kept in plainly labeled closed storage containers with sec ondary containments inside the Hangar and ARFF/SRE buildings. There is no outside storage of any such products.
• Provide appropriate storage for waste oil and related products with secondary containment and regular removal by contract waste haulers .
• Dumpsters for trash and recyclables are kept inside the hangar and there is regularly scheduled trash pickup.

The Airport has control measures in place for maintenance purposes. The floor drain in the Hangar has been filled with concrete and disabl ed; oils and fuels are stored in secondary containment areas, and deicing is done by trained personnel on the terminal apron. The deicing at the Airport is minimal. No major maintenance is performed at the Airport. Any preventive maintenance is accomplished with spill controls in place to prevent excessive discharge.

Good Housekeeping occurs routinely and on an as-needed basis. Procedures are same as previously discussed in section 3.1.2. The schedul es are in line with routine facility inspection as they are conducted at least quarterly, once for each of the periods listed:
January 1-March 31 (monthly if deicing)
April 1-June 30
July 1-September
October 1-December 31 (monthly if deicing)

Endangered Species Protection

Using the instructions in Appendix E (https://www.epa.gov/sites/production/files/2015-10/documents/msgp2015_appendixe-2.pdf) of the MSGP, under which endangered species criterion listed in Part 1.1.4.5 are you eligible for coverage under this permit?

Criterion A - No listed species of critical habitat are in the action area

Provide a brief summary of the basis for the criterion selected in Appendix E (https://www.epa.gov/sites/production/files/2015-10/documents/msgp2015_appendixe-2.pdf):

There are no federally listed or proposed endangered or threatened species that have been identified at the Airport. However, the NPS (lan d-owner) has indicated that the Park Service treats all State-listed species the same as any Federally-Threatened or Endangered species. T he Airport is mapped for four State-listed rare species: Eastern Box Turtle, Eastern Spadefoot Toad, Vesper Sparrow, and Broom Crowberr y.

Coordination has taken place with NPS staff and staff of the MA NHESP to determine potential impacts and mitigation for proposed improve ments at the Airport as documented in the 2018 Environmental Assessment (included by reference). Several wildlife surveys were conducte d to identify habitat areas at the airport. As part of that coordination, pavement reconstruction and upgrades to the stormwater system wer e reviewed and approved by the NHESP as having no impact to state-listed species habitat.

Therefore, the Airport would meet the Criterion A (according to the 2015 MSGP, Part 1.1.4.5): No federaly-listed (and no state-listed) specie s or protected habitat are likely to occur in the "action area" (area affected directly or indirectly) as defined in the MSGP.

Historic Preservation

Is your facility located on a property of religious or cultural significance to an Indian tribe? No

Using the instructions in Appendix F (https://www.epa.gov/sites/production/files/2015-10/documents/msgp2015_appendixf.pdf) of the MSGP, under which historic properties preservation criterion listed in Part 1.1.4.6 are you eligible for coverage under this permit?

Criterion B - Subsurface stormwater controls will not affect historic properties

Certification Information

I certify under penalty of law that this document and all attachments were prepared under my direction or supervision in accordance with a system designed to assure that qualified personnel properly gathered and evaluated the information submitted. Based on my inquiry of the person or persons who manage the system, or those persons directly responsible for gathering the information, the information submitted is, to the best of my knowledge and belief, true, accurate, and complete. I have no personal knowledge that the information submitted is other than true, accurate, and complete. I am aware that there are significant penalties for submitting false information, including the possibility of fine and imprisonment for knowing violations. Signing an electronic document on behalf of another person is subject to criminal, civil, administrative, or other lawful action.

Certified By: Arthur Lisenby (BUTCHPVC)

Certified On: 01/30/2019 2:08 PM

SECTION 2: **Stormwater Pollution Prevention Plan (SWPPP), and Spill Prevention, Control, and Countermeasures Plan (SPCCP)**

Stormwater Pollution Prevention Plan (SWPPP)

and

Spill Prevention, Control, and Countermeasures Plan (SPCCP)

Prepared for:

Provincetown Municipal Airport,
176 Race Point Road
Provincetown, MA, 02657

Prepared by:

Jacobs Engineering
January, 2019

Page Intentionally Blank

Stormwater Pollution Prevention Plan (SWPPP)

for:

Provincetown Municipal Airport Commission
Race Point Road
Provincetown, MA, 02657
Telephone: 508-487-0241

SWPPP Contact(s):

Airport Manager
Arthur Lisenby
176 Race Point Road
Provincetown, MA, 02657
Telephone: 508-487-0241
Fax: 508-487-4110

SWPPP Preparation Date:

1/2 /2019

Page Intentionally Blank

Contents

Table of Contents

SECTION 1: FACILITY DESCRIPTION AND CONTACT INFORMATION. 6
1.1 Facility Information. 6
1.2 Contact Information/Responsible Parties. 7
1.3 Stormwater Pollution Prevention Team. 8
1.4 Site Description. 9
1.5 General Location Map. 10
1.6 Site Map. 11
SECTION 2: POTENTIAL POLLUTANT SOURCES. 11
2.1 Potential Pollutants Associated with Industrial Activity. 11
2.2 Spills and Leaks. 13
2.3 Unauthorized Non-stormwater Discharges Documentation. 13
2.4 Salt Storage. 14
2.5 Sampling Data Summary. 14
SECTION 3: STORMWATER CONTROL MEASURES. 14
3.1 Non-numeric Technology-based Effluent Limits (BPT/BAT/BCT) 15
3.1.1 Minimize Exposure. 15
3.1.2 Good Housekeeping. 15
3.1.3 Maintenance. 16
3.1.4 Spill Prevention and Response. 16
3.1.5 Erosion and Sediment Controls. 17
3.1.6 Management of Runoff. 17
3.1.7 Salt Storage Piles or Piles Containing Salt. 17
3.1.8 Dust Generation and Vehicle Tracking of Industrial Materials. 17
3.2 Sector-Specific Non-Numeric Effluent Limits. 18
3.3 Numeric Effluent Limitations Based on Effluent Limitations Guidelines. 18
3.4 Water Quality-based Effluent Limitations and Water Quality Standards. 19
SECTION 4: SCHEDULES AND PROCEDURES. 19
4.1 Good Housekeeping. 19
4.2 Maintenance. 20
4.3 Spill Prevention and Response Procedures. 20
4.4 Erosion and Sediment Control. 20
4.5 Employee Training. 21
4.6 Inspections and Assessments. 21
4.6.1 Routine Facility Inspections. 22
4.6.2 Quarterly Visual Assessment of Stormwater Discharges. 23
4.6.3 Exception to Routine Facility Inspections and Quarterly Visual Assessments for Inactive and Unstaffed Sites. 25
4.7 Monitoring. 26
SECTION 5: DOCUMENTATION TO SUPPORT ELIGIBILITY CONSIDERATIONS UNDER OTHER FEDERAL LAWS. 28
5.1 Documentation Regarding Endangered Species. 28
5.2 Documentation Regarding Historic Properties. 29

SECTION 6: CORRECTIVE ACTIONS. 29
SECTION 7: SWPPP CERTIFICATION. 30
SECTION 8: SWPPP MODIFICATIONS. 31
SWPPP ATTACHMENTS 31
Attachment A – General Location Map
Attachment B – Ortho Map
Attachment C – SWPPP SITE PLAN
Attachment D – SWPPP Site Assessment Memo
Attachment E – Spill Prevention Control and Counter Measures Plan (SPCCP)

SECTION 1: FACILITY DESCRIPTION AND CONTACT INFORMATION.

1.1 Facility Information.

The Provincetown Municipal Airport (PVC), is owned by the Town of Provincetown and located within the Cape Cod National Seashore (CCNS). It is located on approximately 322 acres of federally-owned land administered by the National Park Service (NPS) (Attachment A, Locus Figures). The Provincetown Airport Commission operates and maintains the Airport under the conditions of two Special Use Permits issued by the National Park Service.

The Airport is situated in a low lying flat swale east of Hatches Harbor, between a series of dune ridges. Soils are generally loose course sands with a fluctuating high groundwater table. Surrounding vegetation includes areas of freshwater wetlands, coastal dunes, and managed grassland within the safety areas.

The Provincetown Airport Commission originally adopted a Stormwater Pollution Prevention Plan (SWPPP) in 2000 and updated in 2002 based on modifications to the facility. This SWPPP has been prepared following the 2015 Multi-Sector General Permit for Stormwater Discharges Associated with Industrial Activity (2015 MSGP) as modified effective June 4th, 2015, for EPA Region 1, Massachusetts Permit Number MAR050000.

Facility Information

Name of Facility: Provincetown Municipal Airport

Street: 176 Race Point Road

City: Provincetown State: MA ZIP Code: 02657

County or Similar Subdivision: Barnstable County

NPDES ID (i.e., permit tracking number): MAR05J00F_____ (if covered under a previous permit)

Primary Industrial Activity SIC code, and Sector and Subsector (2015 MSGP, Appendix D and Part 8):
Sector S: Air Transportation Facilities, Subsector S1, SIC Code or Activity Code 4512-4581

Co-located Industrial Activity(s) SIC code(s), Sector(s) and Subsector(s) (2015 MSGP, Appendix D):

Latitude/Longitude

Latitude: 42 º 04´19˝ N (decimal degrees)

Longitude: 70 º 13´17˝ W (decimal degrees)

Method for determining latitude/longitude (check one):

☐USGS topographic map (specify scale:_____) ☐GPS

☒Other (please specify): Airport Reference Point

Horizontal Reference Datum (check one):

☐NAD 27 ☒NAD 83 ☐WGS 84

Is the facility located in Indian country? ☐Yes ☒No

If yes, name of Reservation, or if not part of a Reservation, indicate "not applicable." Not Applicable_____

Are you considered a "federal operator" of the facility?

Federal Operator – an entity that meets the definition of "operator" in this permit and is either any department, agency or instrumentality of the executive, legislative and judicial branches of the Federal government of the United States, or another entity, such as a private contractor, operating for any such department, agency, or instrumentality.

☐Yes ☒No

Estimated area of industrial activity at site exposed to stormwater: 3.6 (acres)

Discharge Information

Does this facility discharge stormwater into a municipal separate storm sewer system

(MS4)? ☐Yes ☒No

If yes, name of MS4 operator: _____

Name(s) of surface water(s) that receive stormwater from your facility: Ground-water fed isolated vegetated wetlands; Hatches Harbor

Does this facility discharge industrial stormwater directly into any segment of an "impaired water" (see definition in 2015 MSGP, Appendix A)? ☐Yes ☒No

If Yes, identify name of the impaired water(s) (and segment(s), if applicable):

Identify the pollutant(s) causing the impairment(s):

Which of the identified pollutants may be present in industrial stormwater discharges from this facility?

Has a Total Maximum Daily Load (TMDL) been completed for any of the identified pollutants? If yes, please list the TMDL pollutants:

Does this facility discharge industrial stormwater into a receiving water designated as a Tier 2, Tier 2.5 or Tier 3 water (see definitions in 2015 MSGP, Appendix A)? ☒Yes ☐No

Are any of your stormwater discharges subject to effluent limitation guidelines (ELGs) (2015 MSGP Table 1-1)? ☐Yes ☒No

If Yes, which guidelines apply?

1.2 Contact Information/Responsible Parties.

Facility Operator(s):

Name: Arthur Lisenby, Airport Manager
Address: 176 Race Point Road
City, State, Zip Code: Provincetown, MA, 02657
Telephone Number: 508-487-0241
Email address: butchpvc@hotmail.com
Fax number: 508-487-4110

(repeat for multiple operators by copying and pasting the above rows)

Facility Owner(s):

Name: Town of Provincetown
Address: 176 Race Point Road
City, State, Zip Code: Provincetown, MA, 02657
Telephone Number: 508-487-0241
Email address: butchpvc@hotmail.com
Fax number: 508-487-4110

(repeat for multiple operators by copying and pasting the above rows)

SWPPP Contact:

SWPPP Contact Name (Primary): Arthur Lisenby, Airport Manager
Telephone number: 508-487-0241
Email address: butchpvc@hotmail.com
Fax number: 508-487-4110

SWPPP Contact Name (Secondary): Erik Strand, PE, Senior Project Manager, JACOBS
Telephone number: 617.532.4360
Email address: Erik.Strand@jacobs.com

1.3 Stormwater Pollution Prevention Team.

Staff Names	Individual Responsibilities
Arthur Lisenby, Airport Manager	· SWPPP development and updates. · Implementation and maintenance of control measures/BMPs for all airport and tenant facilities. · SWPPP compliance inspection.
Erik Strand*, PE JACOBS	· Record keeping as required by the SWPPP (e.g., spill reports, materials inventories). · Training of personnel under SWPPP requirements. · Emergency response coordination.

*Or, designated personal from JACOBS

1.4 Site Description.

The Provincetown Municipal Airport is a public use commercial service airport with scheduled year-round Cape Air airline passenger service to and from Logan International Airport and seasonal commercial passenger service to and from Westchester Airport in White Plains, New York. Cape Air airlines, Transportation Security Administration (TSA) staff, and seasonal Enterprise Rental Car operations are located at the Airport.

Approximately 19 acres of the 322-acre lease area (lease area shown on the locus maps in Attachment A) is paved or impervious. Approximately 3.6 acres of paved area is within the activity area and includes the Terminal Apron and the paved GA Apron (Attachment B) as shown on the SWPPP Site Plan provided in Attachment C.

The Airport has a single 3,500-foot paved precision instrument runway (Runway 7-25) with a partial parallel taxiway and three connector taxiways. Aircraft parking areas include two paved aircraft parking aprons (GA apron and the terminal apron) and a turf apron for smaller aircraft.

The Instrument Landing System (ILS) system consists of a glide slope antenna, the glide slope critical area, a localized antenna and an approach lighting system (MALSF). The Airport also has an on-field Automated Weather Observation Station (AWOS).

Structures and other facilities on the site include:

- Terminal Building-4,989 SF
- Hangar- 6,000 SF
- ARFF/SRE Building 3,200 SF
- Sightseeing Shack less than 500 SF
- TSA Trailer
- Equipment shelters for ILS and Glide Slope
- Storage Container
- 300-gallon above ground storage tank (AST)
- Fuel storage one 10,000-gallon below-ground tank
- Visitor parking
- Employee Parking

Vehicles kept on the site are:

- 1500-gallon fuel truck
- Truck (F-750) with a 10-foot plow blade
- Truck (F-150) with an 8-foot plow blade
- Electric baggage cart
- Ford Expedition SUV

Sanitary waste from the site is discharged to a 10,000-gallon mounded septic system north of the visitor parking area. The current septic system was constructed in approximately 1998. Drinking water is municipal water.

1.5 General Location Map.

Instructions (see 2015 MSGP Part 5.2.2):

Provide a general location map (e.g., U.S. Geological Survey (USGS) quadrangle map or aerial image from the internet) with enough detail to identify the location of your facility and all receiving waters for your stormwater discharges (include as Attachment A of this SWPPP Template).

Please refer to Attachment A for a general location map of the project site.

1.6 Site Map.

Instructions (see 2015 MSGP Part 5.2.2):

Prepare a site map showing the following information. The site map will be included as Attachment B of the finished SWPPP.

- Boundaries of the property and the size of the property in acres;
- Location and extent of significant structures and impervious surfaces;
- Directions of stormwater flow (use arrows);
- Locations of all stormwater control measures;
- Locations of all receiving waters, including wetlands, in the immediate vicinity of your facility. Indicate which waterbodies are listed as impaired and which are identified by your state, tribe or EPA as Tier 2, Tier 2.5, or Tier 3 waters;
- Locations of all stormwater conveyances including ditches, pipes and swales;
- Locations of potential pollutant sources identified under Part 5.2.3.2;
- Locations where significant spills or leaks identified under Part 5.2.3.3 have occurred;
- Locations of all stormwater monitoring points;
- Locations of stormwater inlets and discharge points, with a unique identification code for each discharge point (e.g., Discharge points001, 002), indicating if you are treating one or more discharge points as "substantially identical" under Parts 3.2.3, 5.2.5.3, and 6.1.1, and an approximate outline of the areas draining to each discharge point;
- If applicable, MS4s and where your stormwater discharges to them;
- Areas of designated critical habitat for endangered or threatened species, if applicable.
- Locations of the following activities where such activities are exposed to precipitation:
    - fueling stations;
    - vehicle and equipment maintenance and/or cleaning areas;
    - loading/unloading areas;
    - locations used for the treatment, storage or disposal of wastes;
    - liquid storage tanks;
    - processing and storage areas;
    - immediate access roads and rail lines used or traveled by carriers of raw materials, manufactured products, waste material, or by-products used or created by the facility;
    - transfer areas for substances in bulk;
    - machinery; and
    - locations and sources of run-on to your site from adjacent property that contains significant quantities of pollutants.

The site map for this facility can be found in Attachment C.

SECTION 2: POTENTIAL POLLUTANT SOURCES.

2.1 Potential Pollutants Associated with Industrial Activity.

A site assessment was conducted on Dec 19th, 2018 to gain an understanding of activities and the location of activities and equipment. The Site Assessment Memo is provided as Attachment D. The Airport

currently maintains a 10,000-gallon underground storage tank (UST) for the storage of Avgas, located approximately 120 feet west of the terminal. The Avgas UST is a double-walled tank with interstitial monitoring and cathodic protection from corrosion. The Airport also maintains a 300-gallon above ground storage tank (AST) for the storage of diesel fuel, located east of the Airport Hangar. The diesel fuel AST is equipped with a secondary containment concrete bunker and supplies the main terminals emergency generator.

Cape Air, the fixed base operator (FBO) at the Airport, conducts and oversees all transfers of Avgas. Vendor deliveries, as well as the transfer of Avgas to the Airport's 1,500-gallon mobile refueler, occur at the fuel farm transfer station. Aircraft refueling takes place on the terminal apron, and GA apron (seasonal).

In addition to the transfer of Avgas and diesel fuel, the use of Oil and Hazardous Materials (OHM) at the Airport is limited to occasional light operator maintenance of Airport equipment, and occasional use of Type I ethylene glycol for deicing Cape Air aircraft. Deicing operations are conducted away from the catch basins when necessary, on the terminal apron pavement in front of the Hangar in an as needed basis. Only 35 to 45 gallons of deicing fluid is used annually. Deicing operations always are done at least 50 ft away from any wetland and water resources of the commonwealth. Hazardous waste is properly disposed of by a licensed hazardous waste contractor as needed. Except for light servicing of maintenance equipment, Airport operations do not include aircraft maintenance or vehicle servicing. The Airport does not use pesticides, insecticides, or herbicides in grounds keeping operations.

Industrial Activity	Associated Pollutants
Aircraft Fueling	AVGAS
Vehicle Fueling	Vehicles fueled at an off-site town facility
Aircraft Deicing	Type 1 Propylene glycol
Aircraft Maintenance	Oils/Lubricants
Material Storage	Cleaning Fluids
Preflight checks	AVGAS
AVGAS Delivery	AVGAS
Heating Oil Delivery	No. 2 Heating Oil
Diesel Fuel Delivery	Diesel Oil

2.2 Spills and Leaks.

Instructions (See 2015 MSGP Part 5.2.3.3):

Include the following in this section:

- Potential spills and leaks: A description of where potential spills and leaks could occur at your site that could contribute pollutants to your stormwater discharge and specify which discharge points are likely to be affected by such spills and leaks.
- Past spills and leaks: A description of significant spills and leaks in the past three years of oil or toxic or hazardous substances that actually occurred at exposed areas, or that drained to a stormwater conveyance.

Note: Significant spills and leaks include, but are not limited to, releases of oil or hazardous substances in excess of quantities that are reportable under CWA Section 311 (see 40 CFR 110.6 and 40 CFR 117.21) or Section 102 of the Comprehensive Environmental Response, Compensation and Liability Act (CERCLA), 42 USC §9602.

Areas of Site Where Potential Spills/Leaks Could Occur

Location	Discharge Points
Terminal Apron	Infiltrate into adjacent soils or Outfall#1 (near employee lot)
GA Apron	Infiltrate into adjacent soils or Outfall#2 (near TSA trailer)
Underground Fuel Tank	Released to underlying soil
Above Ground Fuel Tank	Released to underlying soil

Description of Past Spills/Leaks

Date	Description	Discharge Points
2014	No Reportable Spills	Outfalls
2015	No Reportable Spills	Outfalls
2016	No Reportable Spills	Outfalls
2017	No Reportable Spills	Outfalls

2.3 Unauthorized Non-stormwater Discharges Documentation.

Instructions (see 2015 MSGP Part 5.2.3.4):

Part 1.1.3 of the 2015 MSGP identifies allowable non-stormwater discharges. The questions below require you to provide documentation of the following:

- Evaluation for the presence of unauthorized non-stormwater discharges at your site; and
- Elimination of any unauthorized non-stormwater discharges.

Description of this facility's unauthorized non-stormwater discharge evaluation:

- Date of evaluation: Summer/Fall 2019 date anticipated because of high groundwater levels.
- Description of the evaluation criteria used: Observe outfalls after a period of low groundwater and no precipitation three days before inspection; make a note of any flow, odors, staining or debris.
- List of the drainage points that were directly observed during the evaluation: Outfall #1, Outfall #2

- Action(s) taken, such as a list of control measures used to eliminate unauthorized discharge(s), or documentation that a separate NPDES permit was obtained. For example, a floor drain was sealed, a sink drain was re-routed to the sanitary sewer or an NPDES permit application was submitted for an unauthorized cooling water discharge: None Required

2.4 Salt Storage.

Instructions (see 2015 MSGP Part 5.2.3.5):

Document the location of any storage piles containing salt used for deicing or other commercial or industrial purposes.

Note: you will be asked additional questions concerning salt storage in Section 3.1.7 of this SWPPP template, below.

Salt Storage piles are not kept at the facility. A small amount of the ice melt is stored in the hanger for use on the landside terminal entrance for pedestrian safety.

2.5 Sampling Data Summary.

Instructions (See 2015 MSGP Part 5.2.3.6):

Summarize all stormwater sampling data collected from your permitted discharge points during the previous permit term. Include a narrative description that summarizes the collected data to support identification of potential pollution sources. Note that data tables and/or figures may be used to aid the summary.

None Required

Provincetown Municipal Airport was not required to collect and analyze stormwater discharge for the last permit.

SECTION 3: STORMWATER CONTROL MEASURES.

Instructions (See 2015 MSGP Parts 2.1.2, Part 8, and 5.2.4):

In Sections 3.1 - 3.11 of this SWPPP template, you are asked to describe the stormwater control measures that you have installed at your site to meet each of the permit's

- Non-numeric technology-based effluent limits in Part 2.1.2;
- Applicable numeric effluent limitations guidelines-based limits in Part 2.1.3 and Part 8;
- Water quality-based effluent limits in Part 2.2;
- Any additional measures that formed the basis of eligibility regarding threatened and endangered species, historic properties, and/or federal CERCLA site requirements in Part 2.3; and
- Applicable effluent limits in Parts 8 and 9.

In addition to your control measure descriptions, include explanations of how the controls fulfill the following requirements (see 2015 MSGP Part 2.1.1):

- The selection and design considerations; and
- How they address the pollutant sources identified in section 2.1 of the Template.

3.1 Non-numeric Technology-based Effluent Limits (BPT/BAT/BCT)

You must comply with the following non-numeric effluent limits (except where otherwise specified in Part 8) as well as any sector-specific non-numeric effluent limits in Part 8.

3.1.1 Minimize Exposure.

Instructions (see 2015 MSGP Part 2.1.2.1):
Describe any structural controls or practices used to minimize the exposure of industrial activities to rain, snow, snowmelt and runoff. Describe where the controls or practices are being implemented at your site.

Control measures that are included under "Minimize Exposure" are measures that generally prevent contaminants from coming in contact with stormwater. At the Airport, materials storage and related activities are located inside the hangar and ARFF/SRE building.

Fueling and deicing operations are activities that must be conducted outside. However, deicing for Cape Air flights is minimized by storing aircraft overnight in the hangar, before scheduled flights.

Aircraft are not washed at the Airport.

During preflight checks, pilot sumps their fuel tanks to clear any water settling in the tanks and put the slumped fuel in a one-gallon gasoline tank for use with maintenance equipment. Therefore, all slumped fuel during preflight checks is recycled and used.

3.1.2 Good Housekeeping.

Instructions (see 2015 MSGP Parts 2.1.2.2 and 5.2.5.1):
Describe any practices you are implementing to keep exposed areas of your site clean. Describe where each practice is being implemented at your site. Include here your schedule for: (1) regular pickup and disposal of waste materials, and (2) routine inspections for leaks and of the condition of drums, tanks and containers. Note: There are specific requirements for facilities that handle pre-production plastic.

The following Good Housekeeping measures are conducted at the Airport:

- Good housekeeping and site maintenance are practiced by all employees and tenants of the facility.
- Working and storage areas are maintained on the site in a clean and orderly manner.
- All solvents, cleaners, degreasers, paints, lubricants and similar type liquids are kept in plainly labeled closed storage containers with secondary containment inside the Hangar and ARFF/SRE buildings. There is no outside storage of any such products.
- Provide appropriate storage for waste oil and related products with secondary containment and regular removal by contract waste haulers.
- Dumpsters for trash and recyclables are kept inside the hangar and there is regularly scheduled trash pickup.

3.1.3 Maintenance.

Instructions (see 2015 MSGP Parts 2.1.2.3 and 5.2.5.1):

Describe procedures (1) to maintain industrial equipment so that spills/leaks are avoided and (2) to keep control measures in effective operating condition. Include the schedule you will follow for such maintenance activities. Describe where each applicable procedure is being implemented at the site.

The Airport has control measures in place for maintenance purposes. The floor drain in the Hangar has been filled with concrete and disabled; oils and fuels are stored in secondary containment areas, and deicing is done by trained personnel on the terminal apron. The deicing at the Airport is minimal. No major maintenance is performed at the Airport. Any preventive maintenance is accomplished with spill controls in place to prevent excessive discharge.

3.1.4 Spill Prevention and Response.

Instructions (see 2015 MSGP Parts 2.1.2.4 and 5.2.5.1):

Describe any structural controls or procedures used to minimize the potential for leaks, spills and other releases. You must implement the following at a minimum:

- Plainly label containers (e.g., "Used Oil," "Spent Solvents," "Fertilizers and Pesticides") that could be susceptible to spillage or leakage to encourage proper handling and facilitate rapid response if spills or leaks occur; *
- Implement procedures for material storage and handling, including the use of secondary containment and barriers between material storage and traffic areas, or a similarly effective means designed to prevent the discharge of pollutants from these areas;
- Develop training and train all staff on procedures to quickly stop, contain and clean up leaks, spills, and other releases. As appropriate, execute such procedures as soon as possible;
- Keep spill kits on-site, located near areas where spills may occur or where a rapid response can be made; and
- Notify appropriate facility personnel when a leak, spill or other release occurs.

Describe where each control is to be located or where applicable procedures will be implemented.

Note: some facilities may be required to develop a Spill Prevention Control and Countermeasure (SPCC) plan under a separate regulatory program (40 CFR 112). If you are required to develop an SPCC plan, or you already have one, you should include references to the relevant requirements from your plan.

EPA recommends you include:

Where a leak, spill or other release containing a hazardous substance or oil in an amount equal to or in excess of a reportable quantity established under either 40 CFR Part 110, 40 CFR Part 117, or 40 CFR Part 302 occurs during a 24-hour period, you must notify the National Response Center (NRC) at (800) 424-8802 or, in the Washington, DC, metropolitan area, call (202) 267-2675 in accordance with the requirements of 40 CFR Part 110, 40 CFR Part 117, and 40 CFR Part 302 as soon as you have knowledge of the discharge. State or local requirements may necessitate reporting spills or discharges to local emergency response, public health, or drinking water supply agencies. Contact information must be in locations that are readily accessible and available.

The Airport has a current Spill Prevention Control and Countermeasures Plan (SPCCP provided as Attachment E). The Airport maintains spill response equipment at the fuel farm transfer station, inside the hangar, inside the ARFF/SRE building, and on the mobile refueler.

3.1.5 Erosion and Sediment Controls.

Instructions (see 2015 MSGP Parts 2.1.2.5 and 5.2.5.1):

Describe activities and processes for stabilizing exposed soils to minimize erosion. Describe flow velocity dissipation devices placed at all discharge locations and all structural and non-structural control measures to prevent the discharge of sediment. If applicable, describe the type and purpose of any polymers and/or chemical treatments used to control erosion and the location at your site where each control is implemented.

Areas surrounding the pavement at the Airport are maintained as grassland or natural coastal dunes. Areas are well vegetated and relatively flat. Outfall #1 is fitted with a sediment trap which reduces velocities and potential erosion. As part of any construction project at the Airport, construction phase erosion controls are required and slopes must be stabilized and well vegetated to reduce the potential for any significant erosion.

The vegetated Buffer Strips are inspected as one of the control measures identified on the site plan.

3.1.6 Management of Runoff.

Instructions (See 2015 MSGP Part 2.1.2.6):

Describe controls used at your site to divert, infiltrate, reuse, contain or otherwise reduce stormwater runoff. Describe the location at your site where each control is implemented.

Pavement within the activity area flows toward either catch basins or trench drains. The structures are outfitted with filter systems as shown on the site plan.

3.1.7 Salt Storage Piles or Piles Containing Salt.

Instructions (see 2015 MSGP Part 2.1.2.7):

If applicable, describe structures at your site that either cover or enclose salt storage piles or piles containing salt, and any controls that minimize or prevent the discharge of stormwater from such piles. Also, describe any controls or procedures used to minimize exposure resulting from adding to or removing materials from the pile. Describe the location at your site where each control and/or procedure is implemented.

None Required. Salt storage piles are not kept at the facility. A small amount of ice melt is stored in the hangar for use on the landside terminal entryway for pedestrian safety.

3.1.8 Dust Generation and Vehicle Tracking of Industrial Materials.

Instructions (see 2015 MSGP Part 2.1.2.10):

Describe controls and procedures that will be used at your site to minimize generation of dust and off-site tracking of raw, final or waste materials in order to minimize pollutant discharges.

None required.

Provincetown Airport facility activities do not generate dust and do not involve vehicle tracking of industrial materials.

3.2 Sector-Specific Non-Numeric Effluent Limits.

Instructions (see 2015 MSGP Part 8):

Describe any controls or procedures that will be used at your site to comply with any sector-specific requirements that apply to you in Part 8 of the 2015 MSGP. Describe the location at your site where each control and/or procedure will be implemented.

Note: Sector-specific effluent limits apply to Sectors A, E, F, G, H, I, J, L, M, N, O, P, Q, R, S, T, U, V, X, Y, Z and AA.

Specific requirements for Sector S- Air Transportation are included in Part 8.S.4 of the 2015 MSGP. These include:

- good housekeeping measures,
- control measures for vehicle and equipment storage areas, controls for material storage areas,
- controls for fueling systems and fueling areas,
- source reduction (specifically deicing chemicals and operations), and management of runoff (within deicing operations).

These sector-specific measures are similar to the general SWPPP measures and have been addressed in previous sections of the SWPPP. They are not discussed separately here except deicing control measures. Additionally, sector-specific requirements for the Site Plan have been addressed as part of the general requirements for the Site Plan.

The Airport tenant, Cape Air, does not have a separate SWPPP at PVC.

3.3 Numeric Effluent Limitations Based on Effluent Limitations Guidelines.

Instructions (see 2015 MSGP Part 2.1.3):

If you are in an industrial category subject to one of the effluent limitations guidelines identified in the table below (Table 2-1 of the 2015 MSGP), describe controls or procedures that will be implemented at your site to meet these effluent limitations guidelines.

Provincetown Municipal Airport is not in an industrial category subject to the effluent guidelines identified in the table below:

Regulated Activity	40 CFR Part/Subpart	Effluent Limit
Discharges resulting from spray down or intentional wetting of logs at wet deck storage areas	Part 429, Subpart I	See Part 8.A.7
Runoff from phosphate fertilizer manufacturing facilities that comes into contact with any raw	Part 418, Subpart A	See Part 8.C.4

Regulated Activity	40 CFR Part/Subpart	Effluent Limit
materials, finished product, by-products or waste products (SIC 2874)		
Runoff from asphalt emulsion facilities	Part 443, Subpart A	See Part 8. D.4
Runoff from material storage piles at cement manufacturing facilities	Part 411, Subpart C	See Part 8. E.5
Mine dewatering discharges at crushed stone, construction sand and gravel, or industrial sand mining facilities	Part 436, Subparts B, C, or D	See Part 8. J.9
Runoff from hazardous waste landfills	Part 445, Subpart A	See Part 8. K.6
Runoff from non-hazardous waste landfills	Part 445, Subpart B	See Part 8. L.10
Runoff from coal storage piles at steam electric generating facilities	Part 423	See Part 8. O.8
Runoff containing urea from airfield pavement deicing at existing and new primary airports with 1,000 or more annual non-propeller aircraft departures	Part 449	See Part 8. S.8

3.4 Water Quality-based Effluent Limitations and Water Quality Standards.

Instructions (see 2015 MSGP Part 2.2.1):

Describe the measures that will be implemented at your site to control industrial stormwater discharge as necessary to meet applicable water quality standards of all affected states (i.e., your discharge must not cause or contribute to an exceedance of applicable water quality standards in any affected state).

EPA expects that compliance with the conditions in this permit will control discharges as necessary to meet applicable water quality standards. If at any time you become aware, or EPA determines, that your discharge does not meet applicable water quality standards, you must take corrective action(s) as required in Part 4.1 of the 2015 MSGP and document the corrective actions as required in Part 4.3 of the 2015 MSGP. You must also comply with any additional requirements required by your state or tribe.

EPA may also require that you undertake additional control measures (to meet the narrative water quality-based effluent limit above) on a site-specific basis, or require you to obtain coverage under an individual permit, if information in your NOI, required reports, or from other sources indicates that your discharges are not controlled as necessary to meet applicable water quality standards. You must implement all measures necessary to be consistent with an available wasteload allocation in an EPA-established or approved TMDL.

Not Applicable.

The water quality standard for the Hatches harbor has not been developed. The area is within the Cape Cod National Seashore/National Park Service (NPS) boundary, and there is currently no residential development in the watershed.

SECTION 4: SCHEDULES AND PROCEDURES.

4.1 Good Housekeeping.

Instructions (see 2015 MSGP Part 5.2.5.1):

Document a schedule or the process used for determining when pickup and disposal of waste materials occurs (e.g., roll off dumpsters are collected when full). Provide a schedule for routine inspections for leaks and conditions of drums, tanks and containers.

Good Housekeeping occurs routinely and on an as-needed basis. Procedures are same as previously discussed in section 3.1.2. The schedules are in line with routine facility inspection as they are conducted at least quarterly, once for each of the periods listed:

January 1-March 31 (monthly if deicing)

April 1-June 30

July 1-September

October 1-December 31 (monthly if deicing)

4.2 Maintenance.

Instructions (see 2015 MSGP Part 5.2.5.1):

Document preventative maintenance procedures, including regular inspections, testing, maintenance and repair of all control measures to avoid situations that may result in leaks, spills, and other releases, and any back-up practices in place should a runoff event occur while a control measure is off-line. Include the schedule or frequency for maintaining all control measures used to comply with the effluent limits in Part 2 of the 2015 MSGP.

Maintenance occurs routinely and on an as-needed basis. Schedules and procedures can be found in Section 3.1.3 of this SWPPP.

4.3 Spill Prevention and Response Procedures.

Instructions (see 2015 MSGP Part 5.2.5.1):

Document procedures for preventing and responding to spills and leaks, including notification procedures. For preventing spills, include control measures for material handling and storage, and the procedures for preventing spills that can contaminate stormwater. Also specify cleanup equipment, procedures and spill logs, as appropriate, in the event of spills. You may reference the existence of other plans for Spill Prevention Control and Countermeasure (SPCC) developed for the facility under Section 311 of the CWA or BMP programs otherwise required by an NPDES permit for the facility.

Provincetown Municipal Airport maintains a Spill Prevention, Control, and Countermeasure (SPCC) Plan and an Accidental Spill Prevention Plan to address spill prevention control measures and equipment for material handling and storage, cleanup equipment, and spill response procedures. References to both documents can be found in Attachment E.

Spill response and material handling procedures are referenced in Attachment E.

4.4 Erosion and Sediment Control.

Instructions (see 2015 MSGP Part 5.2.5.1):

Document if polymers and/or other chemical treatments are used for erosion and sediment control and identify the polymers and/or chemicals used and the purpose.

Provincetown Municipal Airport does not utilize polymer and chemical treatments for erosion and sediment control.

4.5 Employee Training.

Instructions (see 2015 MSGP Part 2.1.2.8 and 5.2.5.1):

Provide the elements of your training plan, including:

- The content of the training;
- The frequency/schedule of training for employees who work in areas where industrial materials or activities are exposed to stormwater, or who are responsible for implementing activities necessary to meet the conditions of the permit.

The following personnel, at a minimum, must receive training, and therefore should be listed out individually in the table below:

- Personnel who are responsible for the design, installation, maintenance, and/or repair of controls (including pollution prevention measures);
- Personnel responsible for the storage and handling of chemicals and materials that could become contaminants in stormwater discharges;
- Personnel who are responsible for conducting and documenting monitoring and inspections as required in Parts 3 and 6; and
- Personnel who are responsible for taking and documenting corrective actions as required in Part 4.

2015 MSGP Part 2.1.2.8 requires that the personnel who are required to be trained must also be trained to understand the following if related to the scope of their job duties (e.g., only personnel responsible for conducting inspections need to understand how to conduct inspections):

- An overview of what is in the SWPPP;
- Spill response procedures, good housekeeping, maintenance requirements, and material management practices;
- The location of all controls on the site required by this permit, and how they are to be maintained;

All employees who work in areas where industrial materials or activities are exposed to stormwater and those who are responsible for compliance with the MSGP permit receive annual training from trained professional.

Training is conducted in the spring, before the peak season at the Airport.

All employees who fuel aircraft are required to take training courses.

4.6 Inspections and Assessments.

Two types of inspections are required by the 2015 MSGP:

- Routine facility inspections (2015 MSGP Part 3.1)
- Quarterly visual assessment of stormwater discharges (2015 MSGP Part 3.2)

Blank inspection forms for the Airport are provided in Section 3 of the Compliance Notebook. The 2015 MSGP is attached in the compliance notebook.

Instructions (see 2015 MSGP Part 3):

Document procedures for performing the types of inspections specified by this permit, including:

- Routine facility inspections (see Part 3.1) and;
- Quarterly visual assessment of stormwater discharges (see Part 3.2).

Note: If you are invoking the exception for inactive and unstaffed sites proceed to 4.6.3 below.

4.6.1 Routine Facility Inspections.

Instructions (see 2015 MSGP Part 3.1):

Describe the procedures you will follow for conducting routine facility inspections in accordance with Part 3.1 of the 2015 MSGP. Document any findings of your facility inspections and maintain this report with your SWPPP as required in Part 5.5 of the 2015 MSGP. Summarize your findings in the annual report per Part 7.5 of the 2015 MSGP. Any corrective action required as a result of a routine facility inspection must be performed consistent with Part 4 of the 2015 MSGP.

1. Person(s) or positions of person(s) responsible for inspection. Arthur Lisenby, Airport Manager

   Note: Inspections must be performed by qualified personnel with at least one member of your stormwater pollution prevention team participating. Inspectors must consider the results of visual and analytical monitoring (if any) for the past year when planning and conducting inspections. Qualified personnel are those who possess the knowledge and skills to assess conditions and activities that could impact stormwater quality at your facility, and who can also evaluate the effectiveness of control measures.

2. Schedules for conducting inspections. Routine facility inspections must be conducted at least quarterly, once for each of the periods listed:

   January 1-March 31 (monthly if deicing)

   April 1-June 30

   July 1-September

   October 1-December 31 (monthly if deicing)

   During the deicing season, Routine Facility inspections will be conducted monthly.

   Note: Inspections must be conducted at least quarterly (i.e., once each calendar quarter), or in some instances more frequently (e.g., monthly), as appropriate. Increased frequency may be appropriate for some types of equipment, processes and stormwater control measures, or areas of the facility with significant activities and materials exposed to stormwater. At least one of your routine inspections must be conducted during a period when a stormwater discharge is occurring.

3. List areas where industrial materials or activities are exposed to stormwater. Areas of the facility to be inspected (including outfalls) are listed on the Routine Inspection Report Form and include:

   - CB (terminal south)
   - Trench Drain (terminal south)

- CB (terminal west)
- Trench Drain (ARFF/SRE Buildings)
- Outlet #1
- Outlet #2

4. List areas identified in the SWPPP (section 1 of the SWPPP Template) and any others that are potential pollutant sources (see Part 5.2.3)
   - Terminal Apron
   - GA Apron
   - Underground Fuel Tank
   - Above ground Fuel Tank
5. Areas where spills and leaks have occurred in the past 3 years. No Spills and leaks have occurred in the past three years
6. Inspection information for discharge points. Outlet#1 is a 12" Concrete pipe with sedimentation trap and receives stormwater from the trench drain adjacent to the ARFF/SRE building and catch basin in front of the garage. It is located safely outside the fencing without any disturbance from daily operations. The GPS coordinates for Outlet #1 is 42° 4'34.30"N, 70°12'58.47"W

   Outlet#2 is an existing 6" corrugated metal pipe and receives stormwater from the catch basin close to the TSA trailer. It is also safely located outside the main operating area. The GPS coordinate for Outlet #2 is 42° 4'33.53"N, 70°13'2.00"W
7. List the control measures used to comply with the effluent limits contained in this permit. None required
8. Other site-specific inspection objectives. None required

4.6.2 Quarterly Visual Assessment of Stormwater Discharges.

Instructions (see 2015 MSGP Part 3.2):

Describe the procedures you will follow for conducting quarterly visual assessments in accordance with Part 3.2 of the 2015 MSGP. The visual assessment must be made:

- Of a discharge sample contained in a clean, colorless glass or plastic container, and examined in a well-lit area;
- On samples collected within the first 30 minutes of an actual discharge from a storm event. If it is not possible to collect the sample within the first 30 minutes of discharge, the sample must be collected as soon as practicable after the first 30 minutes and you must document why it was not possible to take the sample within the first 30 minutes. In the case of snowmelt, samples must be taken during a period with a measurable discharge from your site; and
- For storm events, on discharges that occur at least 72 hours (3 days) from the previous discharge. The 72-hour (3-day) storm interval does not apply if you document that less than a 72-hour (3-day) interval is representative for local storm events during the sampling period.

Document the results of your visual assessments and maintain this documentation onsite with your SWPPP as required in Part 5.5 of the 2015 MSGP. Any corrective action required as a result of a quarterly visual assessment must be performed consistent with Part 4 of the 2015 MSGP.

Three types of visual assessment of stormwater discharges are required following Part 3.2 of the 2015 MSGP standards:

- Of a discharge sample contained in a clean, colorless glass or plastic container, and examined in a well-lit area;
- On samples collected within the first 30 minutes of an actual discharge from a storm event. If it is not possible to collect the sample within the first 30 minutes of discharge, the sample must be collected as soon as practicable after the first 30 minutes, and you must document why it was not possible to take the sample within the first 30 minutes. In the case of snowmelt, samples must be taken during a period with a measurable discharge from your site; and
- For storm events, on discharges that occur at least 72 hours (3 days) from the previous discharge. The 72-hour (3-day) storm interval does not apply if you document that less than a 72-hour (3-day) interval is representative for local storm events during the sampling period.

For quarterly visual assessments to be performed at your site, here are the following requirements:

Person(s) or positions of person(s) responsible for assessments. Erik Strand, PE, JACOBS

1. Schedules for conducting assessments. Quarterly Visual Assessments must be conducted four times a year. The quarterly Visual Assessment will be completed as part of the quarterly Routine Facility Inspections:

   January 1- March 31

   April 1- June 30

   July 1 -September 30

   October 1- December 31

2. Specific assessment activities. Areas to be inspected are listed on the Quarterly Visual Assessments will specifically include:

   Outlet # 1

   Outlet #2

4.6.3 Exception to Routine Facility Inspections and Quarterly Visual Assessments for Inactive and Unstaffed Sites.

Instructions (see 2015 MSGP Parts 3.1.1 and 3.2.3):

If you are invoking the exception for inactive and unstaffed sites relating to routine facility inspections and/or quarterly visual assessments, you must include documentation to support your claim that your facility has changed its status from active to inactive and unstaffed.

To invoke this exception you must also include a statement in your SWPPP per Part 5.2.5.2 indicating that the site is inactive and unstaffed, and that there are no industrial materials or activities exposed to stormwater, in accordance with the substantive requirements in 40 CFR 122.26(g)(4)(iii). The statement must be signed and certified in accordance with Appendix B, Subsection 11.

Note: If circumstances change and industrial materials or activities become exposed to stormwater or your facility becomes active and/or staffed, this exception no longer applies and you must immediately resume routine facility inspections. If you are not qualified for this exception at the time you become authorized under the 2015 MSGP, but during the permit term you become qualified because your facility becomes inactive and unstaffed, and there are no industrial materials or activities that are exposed to stormwater, you must include the same signed and certified statement as above and retain it with your records pursuant to Part 5.5.

Inactive and unstaffed facilities covered under Sectors G (Metal Mining), H (Coal Mines and Coal Mining-Related Facilities), and J (Non-Metallic Mineral Mining and Dressing) are not required to meet the "no industrial materials or activities exposed to stormwater" standard to be eligible for this exception from routine inspections, per Parts 8.G.8.4, 8.H.8.1, and 8.J.8.1.

☐This site is inactive and unstaffed, and has no industrial materials or activities exposed to stormwater, in accordance with the substantive requirements in 40 CFR 122.26(g)(4)(iii) as signed and certified in Section 7 below.

If you are invoking the exception for inactive and unstaffed sites for your routine facility inspections and/or quarterly visual assessments, include information to support this claim.

NOT APPLICABLE.

4.7 Monitoring.

Instructions (see 2015 MSGP Part 5.2.5.3):

Describe your procedures for conducting the five types of analytical monitoring specified by the 2015 MSGP, where applicable to your facility, including:

- Benchmark monitoring (2015 MSGP Part 6.2.1 and relevant requirements in Part 8 and/or Part 9);
- Effluent limitations guidelines monitoring (2015 MSGP Part 6.2.2 and relevant requirements in Part 8);
- State- or tribal-specific monitoring (2015 MSGP Part 6.2.3 and relevant requirements in Part 9);
- Impaired waters monitoring (2015 MSGP Part 6.2.4);
- Other monitoring as required by EPA (2015 MSGP Part 6.2.5).

Depending on the type of facility you operate, and the monitoring requirements to which you are subject, you must collect and analyze stormwater samples and document monitoring activities consistent with the procedures described in 2015 MSGP Part 6 and Appendix B, Subsections 10 – 12, and any additional sector-specific or state/tribal-specific requirements in 2015 MSGP Parts 8 and 9, respectively. Refer to 2015 MSGP Part 7 for reporting and recordkeeping requirements. *Note: All monitoring must be conducted in accordance with the relevant sampling and analysis requirements at 40 CFR Part 136*. Include in your description procedures for ensuring compliance with these requirements.

If you are invoking the exception for inactive and unstaffed sites for benchmark monitoring, you must include in your SWPPP the information to support this claim as required by 2015 MSGP Part 6.2.1.3.

If you plan to use the substantially identical discharge point exception for your benchmark monitoring requirements, impaired waters monitoring requirements, and/or your quarterly visual assessment, you must include the following documentation:

- Location of each of the substantially identical discharge points;
- Description of the general industrial activities conducted in the drainage area of each discharge point;
- Description of the control measures implemented in the drainage area of each discharge point;
- Description of the exposed materials located in the drainage area of each discharge point that are likely to be significant contributors of pollutants to stormwater discharges;
- An estimate of the runoff coefficient of the drainage areas (low = under 40%; medium = 40 to 65%; high = above 65%);
- Why the discharge points are expected to discharge substantially identical effluents.

Check the following monitoring activities applicable to your facility:

☐Quarterly benchmark monitoring

☐Effluent limitations guidelines monitoring

☐State- or tribal-specific monitoring

☐Impaired waters monitoring

☐Other monitoring required by EPA

For each type of monitoring checked above, your SWPPP must include the following information:

Select type of monitoring activity from drop-down list below (*if subject to more than one type of monitoring activity, you will need to copy and paste the items below for each monitoring activity*):

Click here to select monitoring activity type

The 2015 MSGP includes five types of required analytical monitoring which may apply to discharge at PVC. At this time, no monitoring is required as explained in the following table:

Types of Monitoring	
Monitoring activity Type	Required at PVC
1. Benchmark monitoring (2015 MSGP, Part 6.2.1 and relevant requirements in Part 8 and Part 9)	Not Required. PVC does not use more than 100,000 gallons of glycol-based deicing.
2. Annual Effluent limitations guidelines monitoring (2015 MSGP, Part 6.2.2 and relevant requirements in Part 8)	Not Required. PVC does not conduct any of the regulated activities that require effluent monitoring.
3. State or Tribal monitoring (2015 MSGP, Part 6.2.3) and relevant requirements in Part 9	Not Required. The airport must comply with Clean Water Act and Wetlands Protection Act.
4. Impaired waters monitoring (2015 MSGP, Part 6.2.4)	Not Required. No impaired waters
5. Other Monitoring as required by EPA (2015 MSGP part 6.2.5).	Not required. No monitoring has been required by EPA

1. Sample location(s). Describe where samples will be collected, including any determination that two or more discharge points are substantially identical. N/A
2. Pollutants to be sampled. Include a list of the pollutants that will be sampled and the frequency of sampling for each pollutant. N/A
3. Monitoring Schedules. Include the schedule you will follow for monitoring your stormwater discharge, including where applicable any alternate monitoring periods to be used for facilities in climates with irregular stormwater runoff (2015 MSGP Part 6.1.6) or airport deicing monitoring. N/A
4. Numeric Limitations. List here any pollutants subject to numeric limits (effluent limitations guidelines), and which discharge points are subject to such limits. Note that numeric limits are only included for Sectors A, C, D, E, J, K, L, and O. N/A
5. Procedures. Describe procedures you will follow for collecting samples, including responsible staff who will be involved, logistics for taking and handling samples, laboratory to be used, etc. N/A

Note: it may be helpful to create a table with columns corresponding to # 1 - 5 above for each type of monitoring you are required to conduct.

Inactive and unstaffed sites exception (if applicable) N/A

☐This site is inactive and unstaffed, and has no industrial materials or activities exposed to stormwater, in accordance with the substantive requirements in 40 CFR 122.26(g)(4)(iii) as signed and certified in Section 7 below.

Substantially identical discharge point (outfall) exception (if applicable)

If you plan to use the substantially identical discharge point exception for your benchmark monitoring and/or quarterly visual assessment requirements, include the following information here to substantiate your claim that these discharge points are substantially identical (2015 MSGP Part 5.2.5.3):

- Location of each of the substantially identical discharge points: N/A
- List the general industrial activities conducted in the drainage area of each discharge point: N/A
- List the control measures implemented in the drainage area of each discharge point: N/A
- List the exposed materials located in the drainage area of each discharge point that are likely to be significant contributors of pollutants to stormwater discharges: N/A
- An estimate of the runoff coefficient of the drainage areas (low=under 40%; medium=40 to 65%; high =above 65%): N/A
- Why the discharge points are expected to discharge substantially identical effluents: N/A

SECTION 5: DOCUMENTATION TO SUPPORT ELIGIBILITY CONSIDERATIONS UNDER OTHER FEDERAL LAWS.

5.1 Documentation Regarding Endangered Species.

Instructions (see 2015 MSGP Part 5.2.6.1):
Include any documentation you have that supports your determination of eligibility consistent with 2015 MSGP, Part 1.1.4.5 (Endangered and Threatened Species and Critical Habitat Protection). Refer to Appendix E of the 2015 MSGP for specific instructions for establishing eligibility.

There are no federally listed or proposed endangered or threatened species that have been identified at the Airport. However, the NPS (land-owner) has indicated that the Park Service treats all State-listed species the same as any Federally-Threatened or Endangered species. The Airport is mapped for four State-listed rare species: Eastern Box Turtle, Eastern Spadefoot Toad, Vesper Sparrow, and Broom Crowberry.

Coordination has taken place with NPS staff and staff of the MA NHESP to determine potential impacts and mitigation for proposed improvements at the Airport as documented in the 2018 Environmental Assessment (included by reference). Several wildlife surveys were conducted to identify habitat areas at the airport. As part of that coordination, pavement reconstruction and upgrades to the stormwater system were reviewed and approved by the NHESP as having no impact to state-listed species habitat.

Therefore, the Airport would meet the Criterion A (according to the 2015 MSGP, Part 1.1.4.5): No federally-listed (and no state-listed) species or protected habitat are likely to occur in the "action area" (area affected directly or indirectly) as defined in the MSGP.

5.2 Documentation Regarding Historic Properties.

Instructions (see 2015 MSGP Part 5.2.6.2):

Include any documentation you have that supports your determination of eligibility consistent with 2015 MSGP Part 1.1.4.6 (Historic Properties Preservation). Refer to 2015 MSGP, Appendix F for specific instructions for establishing eligibility.

Coordination has been carried out with the Massachusetts Historical Commission (MHC) regarding the historical significance of the Sightseeing Shack and other significant historical or archaeological resources within the Airport lease area. In their correspondence dated April 2, 2007, (included in the 2011 Environmental Assessment) MHC determined that the Airport CIP project is unlikely to affect significant historical or archaeological resources.

The Cape Cod National Seashore archaeologist has determined that no archaeological testing is necessary for the fence or taxiway lights projects as documented in the 2011 Environmental Assessment prepared for the Airport.

SECTION 6: CORRECTIVE ACTIONS.

Instructions (see 2015 MSGP Part 4):

Describe the procedures for taking corrective action in compliance with Part 4 of the 2015 MSGP.

If a condition requiring corrective action should occur, the condition will be documented within 24-hours of discovery on the Corrective Action Log Sheet and the appropriate personnel will be notified. Follow-up actions will be completed as soon as possible and must include the status of the corrective actions on the log sheet within 14 days of the discovery.

The SWPPP will be reviewed and revised as required in Part 4 of the MSGP.

SECTION 7: SWPPP CERTIFICATION.

Instructions (see 2015 MSGP Part 5.2.7):

The following certification statement must be signed and dated by a person who meets the requirements of Appendix B, Subsection 11.A, of the 2015 MSGP.

Note: this certification must be re-signed in the event of a SWPPP modification in response to a Part 4.1 trigger for corrective action.

I certify under penalty of law that this document and all attachments were prepared under my direction or supervision in accordance with a system designed to assure that qualified personnel properly gathered and evaluated the information submitted. Based on my inquiry of the person or persons who manage the system, or those persons directly responsible for gathering the information, the information submitted is, to the best of my knowledge and belief, true, accurate and complete. I am aware that there are significant penalties for submitting false information, including the possibility of fine and imprisonment for knowing violations.

Name: Arthur W. Lisenby Title: Airport Manager

Signature: Date: 2/12/19

SECTION 8: SWPPP MODIFICATIONS.

Instructions (see 2015 MSGP Part 5.3):

Your SWPPP is a "living" document and is required to be modified and updated, as necessary, in response to corrective actions. See Part 4 of the 2015 MSGP.

- If you need to modify the SWPPP in response to a corrective action required by Part 4.1 or 4.2 of the 2015 MSGP, then the certification statement in section 7 of this SWPPP template must be re-signed in accordance with 2015 MSGP Appendix B, Subsection 11.A.
- For any other SWPPP modification, you should keep a log with a description of the modification, the name of the person making it, and the date and signature of that person. See 2015 MSGP Appendix B, Subsection 11.C.

The SWPPP will be updated as necessary to address corrective actions and annually within 45 days of the last quarterly inspection. The annual update will include recent applicable changes to the City of Provincetown and EPA stormwater regulations, guidance, and site-specific requirements. SWPPP modifications will be reviewed internally following a peer review process and then signed by the appropriate person as required in Appendix B.11 of the MSGP. So far there have been these following SWPPP modifications:

1. SWPPP prepared by Eggleston Environmental, October 2000
2. SWPPP revised by Eggleston Environmental, July 2002
3. SWPPP prepared by Jacobs Engineering, May 2013
4. SWPPP prepared by Jacobs Engineering, December 2018

SWPPP ATTACHMENTS

Attach the following documentation to the SWPPP:

Attachment A – General Location Map

Attachment B – Site Map

Attachment C –SWPPP SITE PLAN

Attachment D – SWPPP Site Assessment Memo

Attachment D –Spill Prevention Control and Counter Measures Plan (SPCCP)

Note: it is helpful to keep a printed-out copy of the 2015 MSGP so that it is accessible to you for easy reference. However, you do not need to formally incorporate the entire 2015 MSGP into your SWPPP. As an alternative, you can include a reference to the permit and where it is kept at the site.

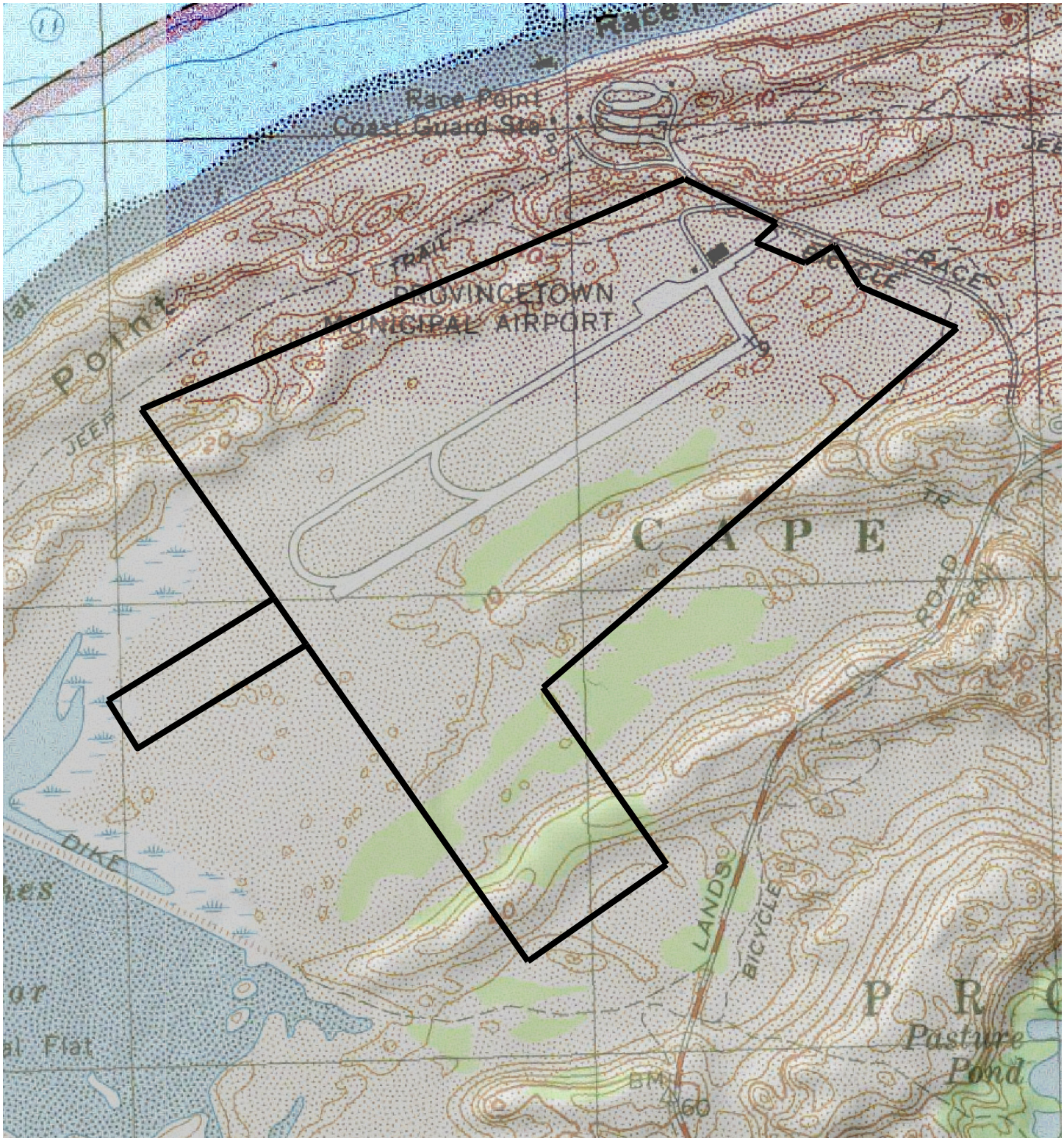

Document Path: H:\Projects\2004\4027 E&K-PTown Airport\GIS\Maps\150429_Maps\150430_USGSLocus.mxd

*Provincetown Topographic Quadrangle

Legend

Lease Line

N

0 1,000

1" = 1,000 feet

Horsley Witten Group
Sustainable Environmental Solutions
90 Route 6A • Sandwich, MA • 02563
Tel: 508-833-6600 • Fax: 508-833-3150 • www.horsleywitten.com

USGS Topographic Quadrangles
Provincetown Municipal Airport
Provincetown, MA

Date: 1/23/2019

ATTACHMENT A

Source: MassGIS, Commonwealth of Massachusetts, InformationTechnology Division

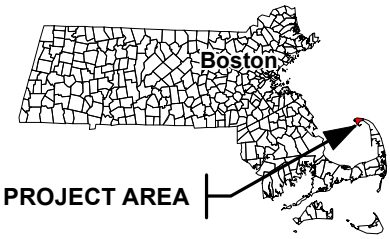

N
W E
S

1 inch = 417 feet

0 105 210 420
Feet

Prepared by:	Orthophoto Locus	JAN 2019
JACOBS	STORMWATER POLLUTION PREVENTION PLAN, PROVINCETOWN MUNICIPAL AIRPORT, PROVINCETOWN, MA	ATTACHMENT B

WETLAND AREA Ⓒ

10,000 GALLON 100-LL AVGAS DOUBLE WALLED UNDERGROUND STORAGE TANK WITH INTERSTITIAL MONITORING AND CATHODIC PROTECTION

UNDERGROUND FUEL TRANSFER LINE WITH FIBERGLASS SECONDARY CONTAINMENT AND INTERSTITIAL MONITORING

SIGHT SEEING SHACK

GENERAL AVIATION RAMP

STORAGE CONTAINER FOR SUMPED FUEL FROM AIRCRAFT

FUEL FARM TRANSFER STATION

FUEL PUMP CONNECTOR

FUEL VAPOR CONNECTOR

AV FUEL PUMP

TSA TRAILER

15' SWING GATE (PADLOCKED WHEN PUMPS NOT IN USE)

FUEL FARM EMERGENCY SHUT OFF SWITCH

SCM #3 CATCH BASIN WITH FILTER INSERT

SCM #6 STORMWATER DISCHARGE OUTLET #2 EXISTING 6" CORREGATED METAL PIPE

AUTO PARKING

SECURE AREA DO NOT ENTER

SCM #1 CATCH BASIN WITH FILTER INSERT*

*SEE INSERT DETAIL BELOW

15' SWING GATE (PADLOCKED)

SPEEDY DRY STORED UNDER STAIR WELL (2-20 LB. BAGS)

2-275 GALLON TANKS FOR HEATING OIL

TERMINAL

MATERIALS STORAGE LOCKER
- AIRCRAFT OIL (IN QUARTS)
- ANTIFREEZE (2 GALLONS)
- WINDSHIELD WASHING FLUID

GARAGE

SCM #2 TRENCH DRAIN

PARTS STORAGE LOCKERS

EQUIPMENT CAGE

2-55 GALLON DRUM FOR SUMPED AV FUEL IN SECONDARY CONTAINMENT

1-OIL DRUM OIL TO RECYCLE

HANGAR

2-55 GAL GLYCOL DRUMS

GLYCOL CART

EXISTING 12" R.C.P.

15' SWING GATE (PADLOCKED AT END OF THE DAY)

SCM #4 TRENCH DRAIN WITH FILTER INSERT*

*SEE INSERT DETAIL BELOW

EXISTING DIRECTION OF FLOW (TYP.)

MOTORIZED SLIDING GATE (KEYPAD/CARD ACCESS)

TERMINAL RAMP

STORAGE CONTAINER (OFFICE SUPPLIES AND MISCELLANEOUS GROUND EQUIPMENT. NO OIL OR OTHER HAZARDOUS MATERIALS)

MAINTENANCE VEHICLE PARKING

SCM #7

WETLAND AREA Ⓐ

FUEL TANK FOR EMERGENCY GENERATOR WITH SPILL CONTAINMENT BUILT IN

EMERGENCY GENERATOR

MOBILE REFUELER OVERNIGHT PARKING AREA (TRUCK CARRIES A SPILL KIT)

SCM #5 STORM WATER DISCHARGE OUTLET #1 12" CONCRETE PIPE WITH SEDIMENTATION TRAP

INV=8.02

PROPANE GAS TANKS (2-60 GAL. TANKS)

3 PAILS INERT FIRE RETARDANT

ARFF/SRE BUILDING

EMPLOYEE PARKING LOT

TRENCH DRAIN

ACCESS ROAD

TO RACE POINT ROAD

HOLDING TANK

DRY FIRE RETARDANT

TAXIWAY A

TAXIWAY B

WETLAND AREA Ⓗ

WETLAND AREA Ⓑ

NOTES:

1. ALL DRAINAGE STRUCTURES HAVE SOLID CONCRETE BOTTOMS.
2. AIRCRAFT AND VEHICLE MAINTENANCE IS NOT PERFORMED AT THE AIRPORT EXCEPT FOR EMERGENCY PURPOSES ONLY.
3. FOR HAZARDOUS SPILLS GREATER THAN 10 GALLONS REPORT TO PROVINCETOWN FIRE DEPARTMENT AT 508-487-7023 AND MASS DEPARTMENT OF ENVIRONMENTAL PROTECTION.

KEY MAP

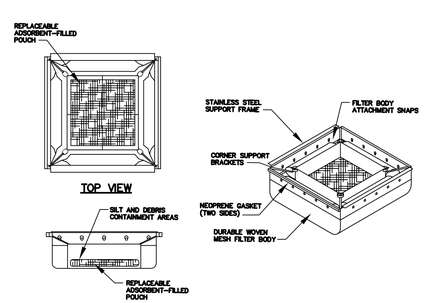

CATCH BASIN INSERT DETAIL

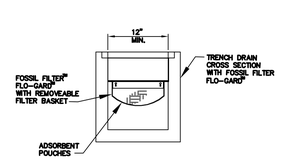

ARFF/SRE TRENCH DRAIN INSERT DETAIL

LEGEND

8.6	CONTOURS
	DRAINLINE
	TAXIWAY CENTERLINE MARKER
	WOODEN FENCE (POST & RAIL)
	8' HIGH CHAIN LINK FENCE
W	OBSERVATION WELL
	TAXIWAY EDGE MARKER
C.B.	CATCH BASIN
H.H.	ELECTRIC HANDHOLE
	EDGE OF PAVEMENT
C.M.	CABLE MARKER
	WETLANDS
	BOLLARDS
	DIRECTION OF FLOW
	WATER GATE
	FIRE HYDRANT
LT	LIGHT POLE 4'
SCM #1	STRUCTURAL CONTROL MEASURE
	BUFFER STRIPS
D	DUMPSTER
	GLYCOL DRUM IN SECONDARY CONTAINMENT
	DRUM IN SECONDARY CONTAINMENT
S.K	SPILL KIT

NO.	REVISIONS	BY	APP.	DATE

GRAPHIC SCALE

20 0 10 20 40

(IN FEET)
1 inch = 20 ft.

SUBMITTED BY:

JACOBS

TOWN OF PROVINCETOWN

PROVINCETOWN MUNICIPAL AIRPORT
PROVINCETOWN, MASSACHUSETTS

SWPPP SITE PLAN

JACOBS

DESIGNED	MM	DATE 3/13	SCALE: AS SHOWN
DRAWN	JLC	DATE 3/13	DRAWING NO.
CHECKED	SJF	DATE 3/13	SHEET NO. 1 OF 1

Jacobs – P:\PROVINCETOWN AIRPORT\2011\E2X57800\700 CADD\740-WORK\Project\SWPPP\SWPPP SITE PLAN.dwg May 22, 2013

Memorandum

120 St. James Avenue, 5th Floor
Boston, Massachusetts 02116
United States
T +1.617.242.9222
F +1.617.242.9824
www.jacobs.com

Subject	**SWPPP Site Assessment**
Attention	Arthur W. Lisenby, Airport Manager, Provincetown Municipal Airport
From	Tim D'Agostino Shilpa Sen
Date	December 20, 2018
Copies to	**Erik Strand, Michael Turgeon, Xue Li**

On December 19th, 2018 Tim D'Agostino and Shilpa Sen of Jacobs Engineering conducted a site assessment at the Provincetown Municipal Airport as required to complete the Stormwater Pollution Prevention Plan for an upgradation of the existing SWPPP under the 2015 Multi Sector General Permit (MSGP).

The purpose of this site assessment was to gain a thorough understanding of activities and operations conducted at the airport, the location of the activities, and the equipment, to identify potential pollutant sources.

The Interior and exterior of the following facilities were inspected:

- Stormwater Drainage System
- Terminal Garage (Overhead door for storage room between Hangar and Terminal)
- ARFF-SRE Building
- Hanger
- TSA Trailer (exterior only)
- Storage Container (not in use – exterior only)
- Terminal Apron
- Sightseeing Shack/Pilot Shack

The Cape Air staff and the airport manager were interviewed regarding daily operations and maintenance activities. These activities included: seasonal deicing operations, type of containment for any probable spilling events, silt filter replacement and trash pick-up.

Recommendations:

According to the overall observation, the Airport has best Management Practices in place to prevent or minimize potential pollutant sources for the Stormwater Pollution Prevention Plan (SWPPP).

The following minor improvements are recommended:

- ✓ Consider regular maintenance of the discharge points, both Outlet#1 and Outlet#2, periodic removal of leaf litter is recommended;
- ✓ Label the sealed monitoring well in the Hanger;
- ✓ Label the speedy dry container, consider putting a large sign on the wall to indicate the location of the spill response materials;
- ✓ Consider replacing silt filters for both catch basins;
- ✓ Consider replacing the holding tank manhole covers adjacent to the ARFF/SRE building which currently read “Sewer” to read “Holding Tank;”
- ✓ Make sure that the sump barrels and extra glycol drums are always on secondary containment pallets.

U.S. ENVIRONMENTAL PROTECTION AGENCY
TIER I QUALIFIED FACILITY SPCC PLAN TEMPLATE

Instructions to Complete this Template

This template is intended to help the owner or operator of a Tier I qualified facility develop a self-certified Spill Prevention, Control, and Countermeasure (SPCC) Plan. To use this template, your facility must meet all of the applicability criteria of a Tier I qualified facility listed under §112.3(g)(1) of the SPCC rule. This template provides every SPCC rule requirement necessary for a Tier I qualified facility, which you must address and implement.

You may use this template to comply with the SPCC regulation or use it as a model and modify it as necessary to meet your facility-specific needs. If you modify the template, your Plan must include a section cross-referencing the location of each applicable requirement of the SPCC rule and you must ensure that your Plan is an equivalent Plan that meets all applicable rule requirements of 40 CFR 112.6(a)(3).

You may complete this template either electronically or by hand on a printed copy. This document is a reformatted version of the template found in Appendix G of 40 CFR part 112.[a] No substantive changes have been made. Please note that a "Not Applicable" ("N/A") column has been added to both Table G-10 (General Rule Requirements for Onshore Facilities) and Table G-11 (General Rule Requirements for Onshore Oil Production Facilities). The "N/A" column should help you complete your self-certification when a required rule element does not apply to your facility. Use of the "N/A" column is optional and is not required by rule.

All Tier I qualified facility self-certifiers must complete Sections I, II, and III. Additionally, the owner or operator of an:

- Onshore facility (excluding production) must complete Section A.
- Onshore oil production facility (excluding drilling and workover facilities) must complete Section B.
- Onshore oil drilling and workover facility must complete Section C.

Complete and include with your Plan the appropriate attachments. You should consider printing copies of the attachments for use in implementing the SPCC Plan (e.g. Attachment 3.1 - Inspection Log & Schedule;
Attachment 4 - Discharge Notification Form).

To complete the template, check the box next to the requirement to indicate that it has been adequately addressed. Either write "N/A" in the column or check the box under the "N/A" column to indicate those requirements that are not applicable to the facility. Where a section requires a description or listing, write in the spaces provided (or attach additional descriptions if more space is needed).

Below is a key for the colors used in the section headers:

Sections I, II, and III:	Required for all Tier I qualified facilities
Section A:	Onshore facilities (excluding production)
Section B:	Onshore oil production facilities (excluding drilling and workover facilities)
Section C:	Onshore oil drilling and workover facilities
Attachments:	1 - Five Year Review and Technical Amendment Logs 2 - Oil Spill Contingency Plan and Checklist 3 - Inspections, Dike Drainage and Personnel Training Logs 4 - Discharge Notification Form

After you have completed all appropriate sections, certify and date your Plan, and then implement it by the compliance date. If your facility was in operation before August 16, 2002, and you do not already have a Plan, then implement this template immediately. Conduct inspections and tests in accordance with the written procedures that you have developed for your facility. You must keep with the SPCC Plan a record of these inspections and tests, signed by the appropriate supervisor or inspector, for a period of three years.

Do not forget to periodically review your Plan (at least once every five years) or to update it when you make changes to your facility. You must prepare amendments within six months of the facility change, and implement them as soon as possible, but not later than six months following preparation of any amendment.

In the event that your facility releases oil to navigable waters or adjoining shorelines, immediately call the National Response Center (NRC) at 1-800-424-8802. The NRC is the federal government's centralized reporting center, which is staffed 24 hours per day by U.S. Coast Guard personnel.

---

[a] Please note that the use of this template is not mandatory for a Tier I qualified facility. You may also meet the SPCC Plan requirement by preparing a satisfactory Tier II qualified facility Plan, preparing a satisfactory Plan that is certified by a Professional Engineer, or by developing an equivalent Plan for a Tier I qualified facility. Further information on the requirements of these methods can be found in 40 CFR part 112.6(a)(1). If you use any of these alternative methods you must include a cross reference in your Plan that shows how the equivalent Plan meets all applicable 40 CFR part 112 requirements.

Tier I Qualified Facility SPCC Plan

This template constitutes the SPCC Plan for the facility, when completed and signed by the owner or operator of a facility that meets the applicability criteria in §112.3(g)(1). This template addresses the requirements of 40 CFR part 112. Maintain a complete copy of the Plan at the facility if the facility is normally attended at least four hours per day, or for a facility attended fewer than four hours per day, at the nearest field office. When making operational changes at a facility that are necessary to comply with the rule requirements, the owner/operator should follow state and local requirements (such as for permitting, design and construction) and obtain professional assistance, as appropriate.

Facility Description

Facility Name	Provincetown Municipal Airport				
Facility Address	176 Race Point Road				
City	Provincetown	State	MA	ZIP	02657
County	Barnstable	Tel. Number	(508) 487 - 0241		
Owner or Operator Name	Town of Provincetown				
Owner or Operator Address	176 Race Point Road				
City	Provincetown	State	MA	ZIP	02657
County	Barnstable	Tel. Number	(508) 487 - 0241		

I. Self-Certification Statement (§112.6(a)(1))

The owner or operator of a facility certifies that each of the following is true in order to utilize this template to comply with the SPCC requirements:

I Arthur W. Lisenby certify that the following is accurate:

1. I am familiar with the applicable requirements of 40 CFR part 112;
2. I have visited and examined the facility;
3. This Plan was prepared in accordance with accepted and sound industry practices and standards;
4. Procedures for required inspections and testing have been established in accordance with industry inspection and testing standards or recommended practices;
5. I will fully implement the Plan;
6. This facility meets the following qualification criteria (under §112.3(g)(1)):
   a. The aggregate aboveground oil storage capacity of the facility is 10,000 U.S. gallons or less; and
   b. The facility has had no single discharge as described in §112.1(b) exceeding 1,000 U.S. gallons and no two discharges as described in §112.1(b) each exceeding 42 U.S. gallons within any twelve month period in the three years prior to the SPCC Plan self-certification date, or since becoming subject to 40 CFR part 112 if the facility has been in operation for less than three years (not including oil discharges as described in §112.1(b) that are the result of natural disasters, acts of war, or terrorism); and
   c. There is no individual oil storage container at the facility with an aboveground capacity greater than 5,000 U.S. gallons.
7. This Plan does not deviate from any requirement of 40 CFR part 112 as allowed by §112.7(a)(2) (environmental equivalence) and §112.7(d) (impracticability of secondary containment) or include any measures pursuant to §112.9(c)(6) for produced water containers and any associated piping;
8. This Plan and individual(s) responsible for implementing this Plan have the full approval of management and I have committed the necessary resources to fully implement this Plan.

I also understand my other obligations relating to the storage of oil at this facility, including, among others:

1. To report any oil discharge to navigable waters or adjoining shorelines to the appropriate authorities. Notification information is included in this Plan.
2. To review and amend this Plan whenever there is a material change at the facility that affects the potential for an oil discharge, and at least once every five years. Reviews and amendments are recorded in an attached log [See Five Year Review Log and Technical Amendment Log in Attachments 1.1 and 1.2.]
3. Optional use of a contingency plan. A contingency plan:
   a. May be used in lieu of secondary containment for qualified oil-filled operational equipment, in accordance with the requirements under §112.7(k), and;
   b. Must be prepared for flowlines and/or intra-facility gathering lines which do not have secondary containment at an oil production facility, and;
   c. Must include an established and documented inspection or monitoring program; must follow the provisions of 40 CFR part 109; and must include a written commitment of manpower, equipment and materials to expeditiously remove any quantity of oil discharged that may be harmful. If applicable, a copy of the contingency plan and any additional documentation will be attached to this Plan as Attachment 2.

I certify that I have satisfied the requirement to prepare and implement a Plan under §112.3 and all of the requirements under §112.6(a). I certify that the information contained in this Plan is true.

Signature _____ Title: Airport Manager

Name Arthur W. Lisenby Date: 2/12/15

II. Record of Plan Review and Amendments

Five Year Review (§112.5(b)):

Complete a review and evaluation of this SPCC Plan at least once every five years. As a result of the review, amend this Plan within six months to include more effective prevention and control measures for the facility, if applicable. Implement any SPCC Plan amendment as soon as possible, but no later than six months following Plan amendment. Document completion of the review and evaluation, and complete the Five Year Review Log in Attachment 1.1. If the facility no longer meets Tier I qualified facility eligibility, the owner or operator must revise the Plan to meet Tier II qualified facility requirements or complete a full PE certified Plan.

Table G-1 Technical Amendments (§§112.5(a), (c) and 112.6(a)(2))	
This SPCC Plan will be amended when there is a change in the facility design, construction, operation, or maintenance that materially affects the potential for a discharge to navigable waters or adjoining shorelines. Examples include adding or removing containers, reconstruction, replacement, or installation of piping systems, changes to secondary containment systems, changes in product stored at this facility, or revisions to standard operating procedures.	☒
Any technical amendments to this Plan will be re-certified in accordance with Section I of this Plan template. *[§112.6(a)(2)]* **[See Technical Amendment Log in Attachment 1.2]**	☒

III. Plan Requirements

1. Oil Storage Containers (§112.7(a)(3)(i)):

Table G-2 Oil Storage Containers and Capacities		
This table includes a complete list of all oil storage containers (aboveground containers[a] and completely buried tanks[b]) with capacity of 55 U.S. gallons or more, unless otherwise exempt from the rule. For mobile/portable containers, an estimated number of containers, types of oil, and anticipated capacities are provided.		☒
Oil Storage Container *(indicate whether aboveground (A) or completely buried (B))*	**Type of Oil**	**Shell Capacity (gallons)**
B - Underground fuel farm tank	100LL gasoline	10,000
A - Aboveground terminal backup generator tank	Diesel fuel oil	300
A - Aboveground terminal heating oil tanks (2)	No. 2 diesel heating oil	550
A - Aboveground mobile fueler tank	100LL gasoline	1,500
A – Sumped 100LL gasoline (Hangar)	100LL gasoline	110
A – Oil Drum to Recycle (Hangar)	Oil	55
A – Glycol Deicer (Hangar)	Glycol	110

Total Aboveground Storage Capacity [c] 2,625 gallons
Total Completely Buried Storage Capacity 10,000 gallons
Facility Total Oil Storage Capacity 12,625 gallons

[a] Aboveground storage containers that must be included when calculating total facility oil storage capacity include: tanks and mobile or portable containers; oil-filled operational equipment (e.g. transformers); other oil-filled equipment, such as flow-through process equipment. Exempt containers that are not included in the capacity calculation include: any container with a storage capacity of less than 55 gallons of oil; containers used exclusively for wastewater treatment; permanently closed containers; motive power containers; hot-mix asphalt containers; heating oil containers used solely at a single-family residence; and pesticide application equipment or related mix containers.

[b] Although the criteria to determine eligibility for qualified facilities focuses on the aboveground oil storage containers at the facility, the completely buried tanks at a qualified facility are still subject to the rule requirements and must be addressed in the template; however, they are not counted toward the qualified facility applicability threshold.

[c] Counts toward qualified facility applicability threshold.

2. Secondary Containment and Oil Spill Control (§§112.6(a)(3)(i) and (ii), 112.7(c) and 112.9(c)(2)):

Table G-3 Secondary Containment and Oil Spill Control	
Appropriate secondary containment and/or diversionary structures or equipment[a] is provided for all oil handling containers, equipment, and transfer areas to prevent a discharge to navigable waters or adjoining shorelines. The entire secondary containment system, including walls and floor, is capable of containing oil and is constructed so that any discharge from a primary containment system, such as a tank or pipe, will not escape the containment system before cleanup occurs.	☒

[a] Use one of the following methods of secondary containment or its equivalent: (1) Dikes, berms, or retaining walls sufficiently impervious to contain oil; (2) Curbing; (3) Culverting, gutters, or other drainage systems; (4) Weirs, booms, or other barriers; (5) Spill diversion ponds; (6) Retention ponds; or (7) Sorbent materials.

Table G-4 below identifies the tanks and containers at the facility with the potential for an oil discharge; the mode of failure; the flow direction and potential quantity of the discharge; and the secondary containment method and containment capacity that is provided.

Table G-4 Containers with Potential for an Oil Discharge

Area	Type of failure (discharge scenario)	Potential discharge volume (gallons)	Direction of flow for uncontained discharge	Secondary containment method[a]	Secondary containment capacity (gallons)
Bulk Storage Containers and Mobile/Portable Containers[b]					
Fuel Farm (east of sightseeing shack/west of terminal building)	Leak	1-10,000	Southwest	Double-walled	10,000
Terminal backup generator (east of aircraft hangar)	Leak	1-500	Southeast	Double tank walled	300
Terminal building heating oil (maintenance room, northeast corner of terminal)	Leak/ transfer spill	1-550	North	Contingency Plan	550
Cape Air Mobile Fueler (southeast of terminal building on terminal ramp)	Leak/ transfer spill	1-1,500	East	Contingency Plan	50
Sumped gasoline	Leak	1-110	Northeast	Spill containment pallet	200
Recycled Oil	Leak	1-55	Northeast	Spill containment pallet	80
Glycol	Leak	1-110	Northeast	Spill containment pallet	200
Oil-filled Operational Equipment (e.g., hydraulic equipment, transformers)[c]					
Piping, Valves, etc.					
Product Transfer Areas (location where oil is loaded to or from a container, pipe or other piece of equipment.)					
Other Oil-Handling Areas or Oil-Filled Equipment (e.g. flow-through process vessels at an oil production facility)					

[a] Use one of the following methods of secondary containment or its equivalent: (1) Dikes, berms, or retaining walls sufficiently impervious to contain oil; (2) Curbing; (3) Culverting, gutters, or other drainage systems; (4) Weirs, booms, or other barriers; (5) Spill diversion ponds; (6) Retention ponds; or (7) Sorbent materials.
[b] For storage tanks and bulk storage containers, the secondary containment capacity must be at least the capacity of the largest container plus additional capacity to contain rainfall or other precipitation.
[c] For oil-filled operational equipment: Document in the table above if alternative measures to secondary containment (as described in §112.7(k)) are implemented at the facility.

3. Inspections, Testing, Recordkeeping and Personnel Training (§§112.7(e) and (f), 112.8(c)(6) and (d)(4), 112.9(c)(3), 112.12(c)(6) and (d)(4)):

Table G-5 Inspections, Testing, Recordkeeping and Personnel Training	
An inspection and/or testing program is implemented for all aboveground bulk storage containers and piping at this facility. *[§§112.8(c)(6) and (d)(4), 112.9(c)(3), 112.12(c)(6) and (d)(4)]*	☒
The following is a description of the inspection and/or testing program (e.g. reference to industry standard utilized, scope, frequency, method of inspection or test, and person conducting the inspection) for all aboveground bulk storage containers and piping at this facility: Properly trained personnel conduct routine periodic inspections of fuel tanks at the Airport. Inspection sheets will be kept on file at the operations office for a minimum of three years per 40 CFR 112.7. Routine daily inspections for the mobile refueler will include the checking of chocks, dome covers and gaskets, loose gear, fluid levels, hoses and lines, filters, belts and wiring, upholstery, debris, controls, brakes, steering, horn, wipers, lights, fire extinguishers, shut-off valves, tires, drain sumps, dispensing hoses and accessories, meters and gauges, pressures, and quality control. The mobile refueler will be inspected on a monthly basis for grounding cable continuity, nozzle screens and fueling hoses. Routine daily fuel tank inspections include the visual checks of fuel level, emergency shut-off, water, hoses, nozzles, dust caps, static grounding, fire extinguishers, electrical control switches, fuel pump, piping, valves, nozzles, product identification, no smoking sign placement, and security. Bi-monthly cleaning and testing of fuel storage tanks and the mobile refueler is conducted by outside contractors. Tanks are inspected for wall thickness, corrosion, integrity, and tightness.	
Inspections, tests, and records are conducted in accordance with written procedures developed for the facility. Records of inspections and tests kept under usual and customary business practices will suffice for purposes of this paragraph. *[§112.7(e)]*	☒
A record of the inspections and tests are kept at the facility or with the SPCC Plan for a period of three years. *[§112.7(e)]* **[See Inspection Log and Schedule in Attachment 3.1]**	☒
Inspections and tests are signed by the appropriate supervisor or inspector. *[§112.7(e)]*	☒
Personnel, training, and discharge prevention procedures [§112.7(f)]	
Oil-handling personnel are trained in the operation and maintenance of equipment to prevent discharges; discharge procedure protocols; applicable pollution control laws, rules, and regulations; general facility operations; and, the contents of the facility SPCC Plan. *[§112.7(f)]*	☒
A person who reports to facility management is designated and accountable for discharge prevention. *[§112.7(f)]* Name/Title: Erik Strand, Project Manager	☒
Discharge prevention briefings are conducted for oil-handling personnel annually to assure adequate understanding of the SPCC Plan for that facility. Such briefings highlight and describe past reportable discharges or failures, malfunctioning components, and any recently developed precautionary measures. *[§112.7(f)]* **[See Oil-handling Personnel Training and Briefing Log in Attachment 3.4]**	☒

4. Security (excluding oil production facilities) §112.7(g):

Table G-6 Implementation and Description of Security Measures	
Security measures are implemented at this facility to prevent unauthorized access to oil handling, processing, and storage area.	☐
The following is a description of how you secure and control access to the oil handling, processing and storage areas; secure master flow and drain valves; prevent unauthorized access to starter controls on oil pumps; secure out-of-service and loading/unloading connections of oil pipelines; address the appropriateness of security lighting to both prevent acts of vandalism and assist in the discovery of oil discharges: Secure Airport personnel are at the Airport between 12 and 18 hours per day. Airport security is maintained through TSA staff, local police officers during peak periods, Security Identification Display Areas, field supervision, security fencing, and security gates limiting access onto the airfield. Airfield lighting deters vandalism.	

5. Emergency Procedures and Notifications (§112.7(a)(3)(iv) and 112.7(a)(5)):

Table G-7 Description of Emergency Procedures and Notifications
The following is a description of the immediate actions to be taken by facility personnel in the event of a discharge to navigable waters or adjoining shorelines *[§112.7(a)(3)(iv) and 112.7(a)(5)]*: 1. Initiate evacuation if necessary; 2. Notify coordinator or program manager; 3. Stop spill flow when possible without risk of personal injury to self or others; 4. Deploy any readily available response resources; 5. Make the release area off limits to unauthorized personnel; 6. Restrict all sources of ignition when flammable substances are involved; 7. Continue response actions at the direction of the coordinator or program manager; and, 8. Ensure that all contaminated response resources and PPE are properly containerized and labeled. 9. Disposal by a licensed hazardous waste handler.

6. Contact List (§112.7(a)(3)(vi)):

Table G-8 Contact List	
Contact Organization / Person	**Telephone Number**
National Response Center (NRC)	1-800-424-8802
Cleanup Contractor(s)	
Key Facility Personnel	
Designated Person Accountable for Discharge Prevention: Program Manager Arthur W. Lisenby, Airport Manager	Office: 508-487-0241
	Emergency: 508-847-4001
Coordinator Erik Strand, Project Manager	Office: 508-487-0241
	Emergency: 603.305.8704
	Office:
	Emergency:
	Office:
	Emergency:
State Oil Pollution Control Agencies DEP	Daytime 508-946-2700 After Hours 888-304-1133
Other State, Federal, and Local Agencies MassDOT Inspector	617-412-3680
Local Fire Department Provincetown Fire Department	508-487-1212
Local Police Department Provincetown Police Department	911
Hospital Cape Cod Hospital	508-771-1800
Other Contact References (e.g., downstream water intakes or neighboring facilities)	

7. NRC Notification Procedure (§112.7(a)(4) and (a)(5)):

Table G-9 NRC Notification Procedure	
In the event of a discharge of oil to navigable waters or adjoining shorelines, the following information identified in Attachment 4 will be provided to the National Response Center immediately following identification of a discharge to navigable waters or adjoining shorelines **[See Discharge Notification Form in Attachment 4]**: *[§112.7(a)(4)]*	☒
• The exact address or location and phone number of the facility; • Date and time of the discharge; • Type of material discharged; • Estimate of the total quantity discharged; • Estimate of the quantity discharged to navigable waters; • Source of the discharge; • Description of all affected media; • Cause of the discharge; • Any damages or injuries caused by the discharge; • Actions being used to stop, remove, and mitigate the effects of the discharge; • Whether an evacuation may be needed; and • Names of individuals and/or organizations who have also been contacted.	

8. SPCC Spill Reporting Requirements (Report within 60 days) (§112.4):

Submit information to the EPA Regional Administrator (RA) and the appropriate agency or agencies in charge of oil pollution control activities in the State in which the facility is located within 60 days from one of the following discharge events:

A single discharge of more than 1,000 U.S. gallons of oil to navigable waters or adjoining shorelines or
Two discharges to navigable waters or adjoining shorelines each more than 42 U.S. gallons of oil occurring within any twelve-month period

You must submit the following information to the RA:

(1) Name of the facility;
(2) Your name;
(3) Location of the facility;
(4) Maximum storage or handling capacity of the facility and normal daily throughput;
(5) Corrective action and countermeasures you have taken, including a description of equipment repairs and replacements;
(6) An adequate description of the facility, including maps, flow diagrams, and topographical maps, as necessary;
(7) The cause of the reportable discharge, including a failure analysis of the system or subsystem in which the failure occurred; and
(8) Additional preventive measures you have taken or contemplated to minimize the possibility of recurrence
(9) Such other information as the Regional Administrator may reasonably require pertinent to the Plan or discharge

* * * * *

NOTE: Complete one of the following sections (A, B or C) as appropriate for the facility type.

A. Onshore Facilities (excluding production) (§§112.8(b) through (d), 112.12(b) through (d)):

The owner or operator must meet the general rule requirements as well as requirements under this section. Note that not all provisions may be applicable to all owners/operators. For example, a facility may not maintain completely buried metallic storage tanks installed after January 10, 1974, and thus would not have to abide by requirements in §§112.8(c)(4) and 112.12(c)(4), listed below. **In cases where a provision is not applicable, write "N/A".**

Table G-10 General Rule Requirements for Onshore Facilities		N/A
Drainage from diked storage areas is restrained by valves to prevent a discharge into the drainage system or facility effluent treatment system, except where facility systems are designed to control such discharge. Diked areas may be emptied by pumps or ejectors that must be manually activated after inspecting the condition of the accumulation to ensure no oil will be discharged. *[§§112.8(b)(1) and 112.12(b)(1)]*	☐	☒
Valves of manual, open-and-closed design are used for the drainage of diked areas. *[§§112.8(b)(2) and 112.12(b)(2)]*	☐	☒
The containers at the facility are compatible with materials stored and conditions of storage such as pressure and temperature. *[§§112.8(c)(1) and 112.12(c)(1)]*	☒	☐
Secondary containment for the bulk storage containers (including mobile/portable oil storage containers) holds the capacity of the largest container plus additional capacity to contain precipitation. Mobile or portable oil storage containers are positioned to prevent a discharge as described in §112.1(b). *[§112.6(a)(3)(ii)]*	☒	☐
If uncontaminated rainwater from diked areas drains into a storm drain or open watercourse the following procedures will be implemented at the facility: *[§§112.8(c)(3) and 112.12(c)(3)]*		
• Bypass valve is normally sealed closed	☐	☒
• Retained rainwater is inspected to ensure that its presence will not cause a discharge to navigable waters or adjoining shorelines	☒	☐
• Bypass valve is opened and resealed under responsible supervision	☐	☒
• Adequate records of drainage are kept **[See Dike Drainage Log in Attachment 3.3]**	☒	☐
For completely buried metallic tanks installed on or after January 10, 1974 at this facility *[§§112.8(c)(4) and 112.12(c)(4)]*:		
• Tanks have corrosion protection with coatings or cathodic protection compatible with local soil conditions.	☒	☐
• Regular leak testing is conducted.	☒	☐
For partially buried or bunkered metallic tanks *[§112.8(c)(5) and §112.12(c)(5)]*:		
• Tanks have corrosion protection with coatings or cathodic protection compatible with local soil conditions.	☒	☐
Each aboveground bulk container is tested or inspected for integrity on a regular schedule and whenever material repairs are made. Scope and frequency of the inspections and inspector qualifications are in accordance with industry standards. Container supports and foundations are regularly inspected. **[See Inspection Log and Schedule and Bulk Storage Container Inspection Schedule in Attachments 3.1 and 3.2]** *[§112.8(c)(6) and §112.12(c)(6)(i)]*	☒	☐
Outsides of bulk storage containers are frequently inspected for signs of deterioration, discharges, or accumulation of oil inside diked areas. **[See Inspection Log and Schedule in Attachment 3.1]** *[§§112.8(c)(6) and 112.12(c)(6)]*	☒	☐
For bulk storage containers that are subject to 21 CFR part 110 which are shop-fabricated, constructed of austenitic stainless steel, elevated and have no external insulation, formal visual inspection is conducted on a regular schedule. Appropriate qualifications for personnel performing tests and inspections are documented. **[See Inspection Log and Schedule and Bulk Storage Container Inspection Schedule in Attachments 3.1 and 3.2]** *[§112.12(c)(6)(ii)]*	☒	☐

Table G-10 General Rule Requirements for Onshore Facilities		N/A
Each container is provided with a system or documented procedure to prevent overfills for the container. Describe: All fuel transfers typically consist of two people to visually ensure overflow does not occur. Sorbent material that soaks up hydrocarbons are used to ensure any minimal overflow is removed and placed in certified hazmat containers. The fuel farm has a VETTER ROOT alarm system warning of any overflow condition prior to it occurring. Fueling is conducted on a pervious surface aiding in the detection of, and response to any potential release.	☒	☐
Liquid level sensing devices are regularly tested to ensure proper operation **[See Inspection Log and Schedule in Attachment 3.1]**. *[§112.6(a)(3)(iii)]*	☒	☐
Visible discharges which result in a loss of oil from the container, including but not limited to seams, gaskets, piping, pumps, valves, rivets, and bolts are promptly corrected and oil in diked areas is promptly removed. *[§§112.8(c)(10) and 112.12(c)(10)]*	☒	☐
Aboveground valves, piping, and appurtenances such as flange joints, expansion joints, valve glands and bodies, catch pans, pipeline supports, locking of valves, and metal surfaces are inspected regularly. **[See Inspection Log and Schedule in Attachment 3.1]** *[§§112.8(d)(4) and 112.12(d)(4)]*	☒	☐
Integrity and leak testing are conducted on buried piping at the time of installation, modification, construction, relocation, or replacement. **[See Inspection Log and Schedule in Attachment 3.1]** *[§§112.8(d)(4) and 112.12(d)(4)]*	☒	☐

B. Onshore Oil Production Facilities (excluding drilling and workover facilities) (§112.9(b), (c), and (d)):

The owner or operator must meet the general rule requirements as well as the requirements under this section. Note that not all provisions may be applicable to all owners/operators. **In cases where a provision is not applicable, write "N/A".**

Table G-11 General Rule Requirements for Onshore Oil Production Facilities		N/A
At tank batteries, separation and treating areas, drainage is closed and sealed except when draining uncontaminated rainwater. Accumulated oil on the rainwater is returned to storage or disposed of in accordance with legally approved methods. *[§112.9(b)(1)]*	☐	☒
Prior to drainage, diked areas are inspected and *[§112.9(b)(1)]*:		
• Retained rainwater is inspected to ensure that its presence will not cause a discharge to navigable waters	☐	☒
• Bypass valve is opened and resealed under responsible supervision	☐	☒
• Adequate records of drainage are kept **[See Dike Drainage Log in Attachment 3.3]**	☐	☒
Field drainage systems and oil traps, sumps, or skimmers are inspected at regularly scheduled intervals for oil, and accumulations of oil are promptly removed **[See Inspection Log and Schedule in Attachment 3.1]** *[§112.9(b)(2)]*	☐	☒
The containers used at this facility are compatible with materials stored and conditions of storage. *[§112.9(c)(1)]*	☐	☒
All tank battery, separation, and treating facility installations (except for flow-through process vessels) are constructed with a capacity to hold the largest single container plus additional capacity to contain rainfall. Drainage from undiked areas is safely confined in a catchment basin or holding pond. *[§112.9(c)(2)]*	☐	☒
Except for flow-through process vessels, containers that are on or above the surface of the ground, including foundations and supports, are visually inspected for deterioration and maintenance needs on a regular schedule. **[See Inspection Log and Schedule in Attachment 3.1]** *[§112.9(c)(3)]*	☐	☒
New and old tank batteries at this facility are engineered/updated in accordance with good engineering practices to prevent discharges including at least one of the following: i. adequate container capacity to prevent overfill if regular pumping/gauging is delayed; ii. overflow equalizing lines between containers so that a full container can overflow to an adjacent container; iii. vacuum protection to prevent container collapse; or iv. high level sensors to generate and transmit an alarm to the computer where the facility is subject to a computer production control system. *[§112.9(c)(4)]*	☐	☒
Flow-through process vessels and associated components are:		
• Are constructed with a capacity to hold the largest single container plus additional capacity to contain rainfall. Drainage from undiked areas is safely confined in a catchment basin or holding pond; *[§112.9(c)(2)]* and	☐	☒
• That are on or above the surface of the ground, including foundations and supports, are visually inspected for deterioration and maintenance needs on a regular schedule. **[See Inspection Log and Schedule in Attachment 3.1]** *[§112.9(c)(3)]*	☐	☒
Or		
• Visually inspected and/or tested periodically and on a regular schedule for leaks, corrosion, or other conditions that could lead to a discharge to navigable waters; and	☐	☒
• Corrective action or repairs are applied to flow-through process vessels and any associated components as indicated by regularly scheduled visual inspections, tests, or evidence of an oil discharge; and	☐	☒
• Any accumulations of oil discharges associated with flow-through process vessels are promptly removed; and	☐	☒
• Flow-through process vessels are provided with a secondary means of containment for the entire capacity of the largest single container and sufficient freeboard to contain precipitation within six months of a discharge from flow-through process vessels of more than 1,000 U.S. gallons of oil in a single discharge as described in §112.1(b), or a discharge more than 42 U.S. gallons of oil in each of two discharges as described in §112.1(b) within any twelve month period. *[§112.9(c)(5)] (Leave blank until such time that this provision is applicable.)*	☐	☒

Table G-11 General Rule Requirements for Onshore Oil Production Facilities		N/A
All aboveground valves and piping associated with transfer operations are inspected periodically and upon a regular schedule. The general condition of flange joints, valve glands and bodies, drip pans, pipe supports, pumping well polish rod stuffing boxes, bleeder and gauge valves, and other such items are included in the inspection. **[See Inspection Log and Schedule in Attachment 3.1]** *[§112.9(d)(1)]*	☐	☒
An oil spill contingency plan and written commitment of resources are provided for flowlines and intra-facility gathering lines **[See Oil Spill Contingency Plan and Checklist in Attachment 2 and Inspection Log and Schedule in Attachment 3.1]** *[§112.9(d)(3)]*	☐	☒
or Appropriate secondary containment and/or diversionary structures or equipment is provided for flowlines and intra-facility gathering lines to prevent a discharge to navigable waters or adjoining shorelines. The entire secondary containment system, including walls and floor, is capable of containing oil and is constructed so that any discharge from the pipe, will not escape the containment system before cleanup occurs.	☐	☐
A flowline/intra-facility gathering line maintenance program to prevent discharges from each flowline has been established at this facility. The maintenance program addresses each of the following:	☐	☒
• Flowlines and intra-facility gathering lines and associated valves and equipment are compatible with the type of production fluids, their potential corrosivity, volume, and pressure, and other conditions expected in the operational environment;	☐	☒
• Flowlines, intra-facility gathering lines and associated appurtenances are visually inspected and/or tested on a periodic and regular schedule for leaks, oil discharges, corrosion, or other conditions that could lead to a discharge as described in §112.1(b). The frequency and type of testing allows for the implementation of a contingency plan as described under part 109 of this chapter.	☐	☒
• Corrective action and repairs to any flowlines and intra-facility gathering lines and associated appurtenances as indicated by regularly scheduled visual inspections, tests, or evidence of a discharge.	☐	☒
• Accumulations of oil discharges associated with flowlines, intra-facility gathering lines, and associated appurtenances are promptly removed. *[§112.9(d)(4)]*	☐	☒
The following is a description of the flowline/intra-facility gathering line maintenance program implemented at this facility:		

C. Onshore Oil Drilling and Workover Facilities (§112.10(b), (c) and (d)):

The owner or operator must meet the general rule requirements as well as the requirements under this section.

Table G-12 General Rule Requirements for Onshore Oil Drilling and Workover Facilities	
Mobile drilling or worker equipment is positioned or located to prevent discharge as described in §112.1(b). *[§112.10(b)]*	☐
Catchment basins or diversion structures are provided to intercept and contain discharges of fuel, crude oil, or oily drilling fluids. *[§112.10(c)]*	☐
A blowout prevention (BOP) assembly and well control system was installed before drilling below any casing string or during workover operations. *[§112.10(d)]*	☐
The BOP assembly and well control system is capable of controlling any well-head pressure that may be encountered while the BOP assembly and well control system are on the well. *[§112.10(d)]*	☐

ATTACHMENT 1 – Five Year Review and Technical Amendment Logs

ATTACHMENT 1.1 – Five Year Review Log

I have completed a review and evaluation of the SPCC Plan for this facility, and will/will not amend this Plan as a result.

Table G-13 Review and Evaluation of SPCC Plan for Facility			
Review Date	Plan Amendment		Name and signature of person authorized to review this Plan
	Will Amend	Will Not Amend	
12/21/2018	☒	☐	Erik Strand
	☐	☐	
	☐	☐	
	☐	☐	
	☐	☐	
	☐	☐	
	☐	☐	
	☐	☐	
	☐	☐	
	☐	☐	
	☐	☐	
	☐	☐	
	☐	☐	

Any technical amendments to this Plan will be re-certified in accordance with Section I of this Plan template.

Table G-15 Description and Certification of Technical Amendments		
Review Date	Description of Technical Amendment	Name and signature of person certifying this technical amendment
12/21/2018	Update of container locations and preventive measures and inspection routines	Erik Strand

ATTACHMENT 1.2 – Technical Amendment Log

ATTACHMENT 2 – Oil Spill Contingency Plan and Checklist

An oil spill contingency plan and written commitment of resources is required for:

- Flowlines and intra-facility gathering lines at oil production facilities and
- Qualified oil-filled operational equipment which has no secondary containment.

An oil spill contingency plan meeting the provisions of 40 CFR part 109, as described below, and a written commitment of manpower, equipment and materials required to expeditiously control and remove any quantity of oil discharged that may be harmful is attached to this Plan.	☒

Complete the checklist below to verify that the necessary operations outlined in 40 CFR part 109 - Criteria for State, Local and Regional Oil Removal Contingency Plans - have been included.

Table G-15 Checklist of Development and Implementation Criteria for State, Local and Regional Oil Removal Contingency Plans (§109.5)[a]	
(a) Definition of the authorities, responsibilities and duties of all persons, organizations or agencies which are to be involved in planning or directing oil removal operations.	☒
(b) Establishment of notification procedures for the purpose of early detection and timely notification of an oil discharge including:	
(1) The identification of critical water uses areas to facilitate the reporting of and response to oil discharges.	☒
(2) A current list of names, telephone numbers and addresses of the responsible persons (with alternates) and organizations to be notified when an oil discharge is discovered.	☒
(3) Provisions for access to a reliable communications system for timely notification of an oil discharge, and the capability of interconnection with the communications systems established under related oil removal contingency plans, particularly State and National plans (e.g., NCP).	☒
(4) An established, prearranged procedure for requesting assistance during a major disaster or when the situation exceeds the response capability of the State, local or regional authority.	☒
(c) Provisions to assure that full resource capability is known and can be committed during an oil discharge situation including:	
(1) The identification and inventory of applicable equipment, materials and supplies which are available locally and regionally.	☒
(2) An estimate of the equipment, materials and supplies which would be required to remove the maximum oil discharge to be anticipated.	☒
(3) Development of agreements and arrangements in advance of an oil discharge for the acquisition of equipment, materials and supplies to be used in responding to such a discharge.	☒
(d) Provisions for well defined and specific actions to be taken after discovery and notification of an oil discharge including:	
(1) Specification of an oil discharge response operating team consisting of trained, prepared and available operating personnel.	☒
(2) Predesignation of a properly qualified oil discharge response coordinator who is charged with the responsibility and delegated commensurate authority for directing and coordinating response operations and who knows how to request assistance from Federal authorities operating under existing national and regional contingency plans.	☒
(3) A preplanned location for an oil discharge response operations center and a reliable communications system for directing the coordinated overall response operations.	☒
(4) Provisions for varying degrees of response effort depending on the severity of the oil discharge.	☒
(5) Specification of the order of priority in which the various water uses are to be protected where more than one water use may be adversely affected as a result of an oil discharge and where response operations may not be adequate to protect all uses.	☒
(6) Specific and well-defined procedures to facilitate recovery of damages and enforcement measures as provided for by State and local statutes and ordinances.	☒

[a] The contingency plan must be consistent with all applicable state and local plans, Area Contingency Plans, and the National Contingency Plan (NCP)

Provincetown Municipal Airport Oil Spill Contingency Plan

National Response Center - 24 Hours: 800-424-8802

Massachusetts DEP Emergency Response Center -Daytime: 508-946-2700
After Hours: 888-304-1133

Massachusetts State Police - 911

Provincetown Police Department - 508-228-1213

Provincetown Fire Department - 508-487-1212

In the event of an oil spill into the environment, Airport or Cape Air personnel shall implement the following response actions to contain the release of oil. Once the oil is contained, the Coordinator or Program Manager shall be notified. The following response contingency plan will be followed for oil spills.

Note: Personnel undertaking oil spill response activity are responsible to wear appropriate, properly-fitted, Personnel Protective Equipment (PPE) at all times.

General Response Procedures for properly trained Airport / FBO employees

1. Initiate evacuation, if necessary;
2. Notify Coordinator or Program Manager, listed in Section 2.0;
3. Stop spill flow when possible without risk of personal injury to self or others;
4. Immediately deploy any readily available response resources (e.g., absorbent pads, drain covers, granulated absorbent, etc.);
5. Make the release area off limits to unauthorized personnel;
6. Restrict all sources of ignition when flammable substances are involved;
7. Continue response actions at the direction of the Coordinator or Program Manager; and,
8. Ensure that all contaminated response resources and PPE are properly containerized and labeled for disposal by a licensed hazardous waste handler.

Note: The sequence of the initial response action may be altered depending upon the spill characteristics (i.e., type of material, quantity).

Spill Response Program Manager or if unavailable, Coordinator

1. Evacuate any non-essential personnel, if necessary;
2. Eliminate the source of the release, if not already accomplished, without jeopardizing the health and safety of self or others;
3. Report the release to the appropriate local contacts (Provincetown Fire Department, Emergency Response Contractors, and Board of Health Agent). When notifying any outside agency of a release of oil or hazardous material the following information, at minimum, should be provided:
    a. Name of individual reporting spill;
    b. Release location and contact information;
    c. Substance released, estimated amount;
    d. Date and time of release;
    e. Description of response actions, undertaken and planned;
    f. Other agencies notified or to be notified; and
    g. Any other relevant information.

4. Direct the deployment of response resources and ensure their proper use;
5. Minimize the potential for environmental impact;
6. Notify emergency response contractors if necessary;
7. Notify the Program Manager and inform them of the release. Determine if release requires Massachusetts Department of Environmental Protection (DEP) or Federal notification;
8. Ensure that all contaminated response resources and PPE are properly containerized and labeled for disposal by a licensed hazardous waste handler; and,
9. Properly document all response activities.

Notification Requirements

In response to a release of oil or hazardous materials, responsible parties are required to conduct response activities in accordance with Massachusetts General Laws, Chapter 21 E, 40 CFR 112, and the Massachusetts Contingency Plan (310 CMR 40). Notification of Local, State, or Federal agencies may be necessary. All releases, regardless of size or material, shall be reported to the Coordinator or Program Manager. The Coordinator or Program Manager shall establish whether a harmful quantity has been released, and if the release requires notification of outside agencies.

Federal regulations generally define an oil discharge as any leak or spill. An oil discharge may cause a film or sheen on the surface or the water, or cause a sludge or emulsion to be deposited beneath the water surface." "Navigable waters" has been defined as all water bodies and streams, including surface waters and groundwater.

Massachusetts regulations 310 CMR 40.0000 define a release of 10 gallons or greater of oil or gasoline as a reportable quantity. Contaminants detected in the environment at or above threshold concentrations also require reporting to DEP, and are listed in 310 CMR 40.1600. A release of oil or hazardous materials to a stormwater conveyance requires DEP notification.

In the event of a single discharge of more than 1,000 gallons into or upon the navigable waters of the U.S. or adjoining shorelines, or two discharges greater than 42 gallons within any 12 month period, the SPCCP shall be submitted to the Regional Administrator at EPA Region **1** and DEP for review.

Reporting to State and Federal Agencies

In accordance with Massachusetts Regulations 310 CMR 30.0000 and 310 CMR 40.0000, certain releases or threats of releases of a reportable quantity of oil and or hazardous materials must be reported to DEP within 2 hours (www.state.ma.gov/dep). Federal reportable quantities for releases into soil, water and air are listed in Table 302.4 of 40 CFR 302.4. Oil spills shall be reported to the following agencies:

National Response Center - 24 Hours: 800-424-8802

Massachusetts DEP Emergency Response Center -Daytime: 508-946-2700
After Hours: 888-304-1133

Massachusetts State Police - 911

Provincetown Police Department - 508-228-1213

Provincetown Fire Department - 508-487-1212

The following information shall be provided to State and Federal agencies when a spill is reported. All correspondence with Local, State, or Federal agencies will be recorded on a Spill Reporting Form.

1. Name, location and type of facility;
2. Person in charge of facility and phone number;
3. Name and phone number of person reporting;
4. Type and estimated amount of material;
5. Location of spill;
6. Time and date of incident;
7. Impacted waterways;
8. Whether or not storm drains have been impacted;
9. Cause of incident and equipment involved;

10. Injuries and/or property damage;
11. Duration of discharge;
12. Response Actions taken; and,
13. Agencies notified.

Spill response equipment is maintained at the fuel transfer station, mobile fuel truck, ARFF/SRE building, and in the Hangar. Spill response equipment includes spill kits with pad absorbents, granulated absorbents, sorbent booms, "pop-up" pools, magnetic catch-basin covers, and hand tools.

ATTACHMENT 3 – Inspections, Dike Drainage and Personnel Training Logs

ATTACHMENT 3.1 – Inspection Log and Schedule

Table G-16 Inspection Log and Schedule

This log is intended to document compliance with §§112.6(a)(3)(iii), 112.8(c)(6), 112.8(d)(4), 112.9(b)(2), 112.9(c)(3), 112.9(d)(1), 112.9(d)(4), 112.12.(c)(6), and 112.12(d)(4), as applicable.

Date of Inspection	Container / Piping / Equipment	Describe Scope (or cite Industry Standard)	Observations	Name/ Signature of Inspector	Records maintained separately [a]
					☐
					☐
					☐
					☐
					☐

[a] Indicate in the table above if records of facility inspections are maintained separately at this facility.

ATTACHMENT 3.2 – Bulk Storage Container Inspection Schedule – onshore facilities (excluding production):

To comply with integrity inspection requirement for bulk storage containers, inspect/test each shop-built aboveground bulk storage container on a regular schedule in accordance with a recognized container inspection standard based on the minimum requirements in the following table.

Table G-17 Bulk Storage Container Inspection Schedule

Container Size and Design Specification	Inspection requirement
Portable containers (including drums, totes, and intermodal bulk containers (IBC))	Visually inspect monthly for signs of deterioration, discharges or accumulation of oil inside diked areas
55 to 1,100 gallons with sized secondary containment	Visually inspect monthly for signs of deterioration, discharges or accumulation of oil inside diked areas plus any annual inspection elements per industry inspection standards
1,101 to 5,000 gallons with sized secondary containment and a means of leak detection[a]	
1,101 to 5,000 gallons with sized secondary containment and no method of leak detection[a]	Visually inspect monthly for signs of deterioration, discharges or accumulation of oil inside diked areas, plus any annual inspection elements and other specific integrity tests that may be required per industry inspection standards

[a] Examples of leak detection include, but are not limited to, double-walled tanks and elevated containers where a leak can be visually identified.

ATTACHMENT 3.3 – Dike Drainage Log

Table G-18 Dike Drainage Log

Date	Bypass valve sealed closed	Rainwater inspected to be sure no oil (or sheen) is visible	Open bypass valve and reseal it following drainage	Drainage activity supervised	Observations	Signature of Inspector
	☐	☐	☐	☐		
	☐	☐	☐	☐		
	☐	☐	☐	☐		
	☐	☐	☐	☐		
	☐	☐	☐	☐		
	☐	☐	☐	☐		
	☐	☐	☐	☐		
	☐	☐	☐	☐		

ATTACHMENT 3.4 – Oil-handling Personnel Training and Briefing Log

Table G-19 Oil-Handling Personnel Training and Briefing Log		
Date	**Description / Scope**	**Attendees**
	A Aircraft Checking. The interior of the aircraft must be checked. No one should be on board during refueling unless an aircrew member must be on board to monitor the quantity of fuel to be loaded. B. Refueler Positioning. The refueler must be driven into position in front of the aircraft. It should not be driven directly toward the aircraft because brake failure could cause a serious accident. (1) Minimum distances. A distance of at least 10 feet should be kept between the refueler and the aircraft. There must be at least 10 feet between the refueler and rotor blades of a helicopter. A distance of at least 20 feet should be kept between the exhaust pipe of the pump engine refueler and the aircraft fill port. (2) Refueler path. The refueler should be parked so that there is a clear and open path to drive it away from the aircraft in an emergency. A tank trailer should not be detached from its tractor when refueling an aircraft. The tractor must be ready to pull the trailer away from the aircraft if the necessary. (3) Ground guides. If possible, the refueler should be driven into position without backing. If the refueler must be backed toward the aircraft, the truck must be brought to full stop 20 to 25 feet away from the aircraft and/or its rotor blades. Another individual should act as a ground guide and his/her signals followed to guide the final backing approach until the refueler is stopped at the proper distance from the aircraft and its fill port and vent. (4) Parking. The refueler's engine (unless it powers the pump) must be stopped and the brake set. Tires of the refueler, and if appropriate, the aircraft, should be chocked. (5) Refueler must be bonded to the aircraft. C. Fuel Check. Refueler product placards must be checked to make sure it is the right type and grade for the aircraft. D. Fire Extinguishers. The refueler fire extinguishers must be placed by the fueler in a position where they will not be in the fueler's way and where they are not likely to be engulfed if a fire should start. E. Bonding Nozzle to Aircraft. The nozzle must be bonded to the aircraft before the dust cap is taken off the nozzle. If the aircraft has a receiver for the bond plug, it should be used. If not, the alligator clip must be attached to a bare metal part of the aircraft. F. Open Fill Port/Closed Circuit Refueling (CCR). After the fill port is opened, the nozzle dust cap must be removed. If an open-port nozzle or the closed circuit refueling (CCR) nozzle adapter is being used, the nozzle well must be put down into the port. The nozzle should not be opened until it is inside the fill port. If the CCR nozzle is being used, the nozzle needs to be mated into the fill port. If they will not latch together, dirt may have gotten in the fill port.	

ATTACHMENT 4 – Discharge Notification Form

In the event of a discharge of oil to navigable waters or adjoining shorelines, the following information will be provided to the National Response Center **[also see the notification information provided in Section 7 of the Plan]**:

Table G-20 Information provided to the National Response Center in the Event of a Discharge			
Discharge/Discovery Date		Time	
Facility Name	Provincetown Municipal Airport		
Facility Location (Address/Lat-Long/Section Township Range)	176 Race Point Road (42-04-20.2N/ 070-13-14.6W)		
Name of reporting individual		Telephone #	
Type of material discharged		Estimated total quantity discharged	Gallons/Barrels
Source of the discharge		Media affected	☐ Soil ☐ Water (specify) ☐ Other (specify)
Actions taken			
Damage or injuries	☐ No ☐ Yes (specify)	Evacuation needed?	☐ No ☐ Yes (specify)
Organizations and individuals contacted	☐ National Response Center 800-424-8802 Time		
	☐ Cleanup contractor (Specify) Time		
	☐ Facility personnel (Specify) Time		
	☐ State Agency (Specify) Time		
	☐ Other (Specify) Time		

SECTION 3: **Blank Inspection Forms for Provincetown Municipal Airport**

Stormwater Industrial Routine Facility Inspection Report

General Information			
Facility Name	**Provincetown Municipal Airport**		
NPDES Tracking No.	**MAR05J00F**		
Date of Inspection		**Start/End Time**	
Inspector's Name(s)	Arthur Lisenby		
Inspector's Title(s)	Airport Manager		
Inspector's Contact Information	508-487-0241		
Inspector's Qualifications	Member of Stormwater Pollution prevention Team		

Weather Information

Weather at time of this inspection?
❑ Clear ❑Cloudy ❑ Rain ❑ Sleet ❑ Fog ❑ Snow ❑ High Winds
❑ Other: Temperature:

Have any previously unidentified discharges of pollutants occurred since the last inspection? ❑Yes ❑No
If yes, describe:

Are there any discharges occurring at the time of inspection? ❑Yes ❑No
If yes, describe:

Control Measures

- *Number the structural stormwater control measures identified in your SWPPP on your site map and list them below (add as many control measures as are implemented on-site). Carry a copy of the numbered site map with you during your inspections. This list will ensure that you are inspecting all required control measures at your facility.*
- *Describe corrective actions initiated, date completed, and note the person that completed the work in the Corrective Action Log.*

	Structural Control Measure	**Control Measure is Operating Effectively?**	**If No, In Need of Maintenance, Repair, or Replacement?**	**Corrective Action Needed and Notes** (identify needed maintenance and repairs, or any failed control measures that need replacement)
1	CB (terminal south)	❑Yes ❑No	❑ Maintenance ❑ Repair ❑ Replacement	
2	Trench Drain (terminal south)	❑Yes ❑No	❑ Maintenance ❑ Repair ❑ Replacement	
3	CB (terminal west)	❑Yes ❑No	❑ Maintenance ❑ Repair ❑ Replacement	
4	Trench Drain (ARFF/SRE Bldg)	❑Yes ❑No	❑ Maintenance ❑ Repair ❑ Replacement	
5	Outlet # 1	❑Yes ❑No	❑ Maintenance ❑ Repair ❑ Replacement	
6	Outlet # 2	❑Yes ❑No	❑ Maintenance ❑ Repair ❑ Replacement	
7	Apron Buffer Strips	❑Yes ❑No	❑ Maintenance ❑ Repair ❑ Replacement	

Areas of Industrial Materials or Activities exposed to stormwater

Below are some general areas that should be assessed during routine inspections. Customize this list as needed for the specific types of industrial materials or activities at your facility.

	Area/Activity	Inspected?	Controls Adequate (appropriate, effective, and operating)?	Corrective Action Needed and Notes
1	**Material loading/unloading and storage areas**	❑Yes ❑No ❑ N/A	❑Yes ❑No	
2	**Equipment operations and maintenance areas**	❑Yes ❑No ❑ N/A	❑Yes ❑No	
3	**Fueling areas Fuel Storage and Transfer Areas**	❑Yes ❑No ❑ N/A	❑Yes ❑No	
4	**Outdoor vehicle and equipment washing areas**	❑Yes ❑No ❑ N/A	❑Yes ❑No	
5	**Waste handling and disposal areas**	❑Yes ❑No ❑ N/A	❑Yes ❑No	
6	**Erodible areas/construction**	❑Yes ❑No ❑ N/A	❑Yes ❑No	
7	**Non-stormwater/ illicit connections**	❑Yes ❑No ❑ N/A	❑Yes ❑No	
8	**Salt storage piles or pile containing salt**	❑Yes ❑No ❑ N/A	❑Yes ❑No	
9	**Dust generation and vehicle tracking**	❑Yes ❑No ❑ N/A	❑Yes ❑No	
10	**Deicing Areas and deicing chemical storage areas**	❑Yes ❑No ❑ N/A	❑Yes ❑No	
11	**Apron Areas**	❑Yes ❑No ❑ N/A	❑Yes ❑No	
12	**Other:**	❑Yes ❑No ❑ N/A	❑Yes ❑No	

Non-Compliance

Describe any incidents of non-compliance observed and not described above:

Additional Control Measures

Describe any additional control measures needed to comply with the permit requirements:

Notes

Use this space for any additional notes or observations from the inspection:

CERTIFICATION STATEMENT

"I certify under penalty of law that this document and all attachments were prepared under my direction or supervision in accordance with a system designed to assure that qualified personnel properly gathered and evaluated the information submitted. Based on my inquiry of the person or persons who manage the system, or those persons directly responsible for gathering the information, the information submitted is, to the best of my knowledge and belief, true, accurate, and complete. I am aware that there are significant penalties for submitting false information, including the possibility of fine and imprisonment for knowing violations."

Print name and title: **Arthur Lisenby, Airport Manager**

Signature:_____**Date:**_____

MSGP Quarterly Visual Assessment Form

(Complete a separate form for each outfall you assess)

Name of Facility: Provincetown Municipal Airport NPDES Tracking No. **MAR05J00F**

Outfall Name: Circle One "Substantially Identical Outfall"? No ☐ ☐ Yes (identify substantially identical outfalls):
Outfall # 1 Outfall # 2

Person(s)/Title(s) collecting sample: _____

Person(s)/Title(s) examining sample: _____

Date & Time Discharge Began: _____ Date & Time Sample Collected: _____ Date & Time Sample Examined: _____

Substitute Sample? ☐ No ☐ Yes (identify quarter/year when sample was originally scheduled to be collected):

Nature of Discharge: ☐ Rainfall ☐ Snowmelt

If rainfall: Rainfall Amount: inches Previous Storm Ended > 72 hours Before Start of This Storm? ☐ Yes ☐ No* (explain):

Parameter

Color ☐ None ☐ Other (describe):

Odor ☐ None ☐ Musty ☐ Sewage ☐ Sulfur ☐ Sour ☐ Petroleum/Gas _____ ☐ Solvents ☐ Other (describe):

Clarity ☐ Clear ☐ Slightly Cloudy ☐ Cloudy ☐ Opaque ☐ Other

Floating Solids ☐ No ☐ Yes (describe):

Settled Solids** ☐ No ☐ Yes (describe):

Suspended Solids ☐ No ☐ Yes (describe):

Foam (gently shake sample) ☐ No ☐ Yes (describe):

Oil Sheen ☐ None ☐ Flecks ☐ Globs ☐ Sheen ☐ Slick ☐ Other (describe):

Other Obvious Indicators of Stormwater Pollution ☐ No ☐ Yes (describe):

* The 72-hour interval can be waived when the previous storm did not yield a measurable discharge or if you are able to document (attach applicable documentation) that less than a 72-hour interval is representative of local storm events during the sampling period.

** Observe for settled solids after allowing the sample to sit for approximately one-half hour.

Detail any concerns, additional comments, descriptions of pictures taken, and any corrective actions taken below (attach additional sheets as necessary).

Certification by Facility Responsible Official (Refer to MSGP Subpart 11 Appendix B for Signatory Requirements)

I certify under penalty of law that this document and all attachments were prepared under my direction or supervision in accordance with a system designed to assure that qualified personnel properly gathered and evaluated the information submitted. Based on my inquiry of the person or persons who manage the system, or those persons directly responsible for gathering the information, the information submitted is, to the best of my knowledge and belief, true, accurate, and complete. I am aware that there are significant penalties for submitting false information, including the possibility of fine and imprisonment for knowing violations.

A. Name: Arthur Lisenby B. Title: Airport Manager

C. Signature: D. Date Signed:

NPDES Permit Tracking No.: MAR05J00F

UNITED STATES ENVIRONMENTAL PROTECTION AGENCY
WASHINGTON, DC 20460

Annual Reporting Form

A. GENERAL INFORMATION

1. Facility Name: PROVINCETOWN MUNICIPAL AIRPORT

2. NPDES Permit Tracking No.: MAR05J00F

3. Facility Physical Address:

a. Street: 176 RACE POINT ROAD

b. City: PROVINCETOWN c. State: MA d. Zip Code: 02657 -

4. Lead Inspectors Name: ARTHUR LISENBY Title: AIRPORT MANAGER

Additional Inspectors Name(s):

5. Contact Person: ARTHUR LISENBY Title: AIRPORT MANAGER

Phone: 508 - 487 - 0241 Ext. E-mail: butchpvc@hotmail.com

6. Inspection Date: / /

B. GENERAL INSPECTION FINDINGS

1. As part of this comprehensive site inspection, did you inspect all potential pollutant sources, including areas where industrial activity may be exposed to stormwater?
☐ YES ☐ NO

If NO, describe why not:

NOTE: *Complete Section C of this form for each industrial activity area inspected and included in your SWPPP or as newly identified in B.2 or B.3 below where pollutants may be exposed to stormwater.*

2. Did this inspection identify any stormwater or non-stormwater outfalls not previously identified in your SWPPP? ☐ YES ☐ NO

If YES, for each location, describe the sources of those stormwater and non-stormwater discharges and any associated control measures in place:

NPDES Permit Tracking No.: M A R 0 5 J 0 0 F

3. Did this inspection identify any sources of stormwater or non-stormwater discharges not previously identified in your SWPPP? ☐ YES ☐ NO

If YES, describe these sources of stormwater or non-stormwater pollutants expected to be present in these discharges, and any control measures in place:

4. Did you review stormwater monitoring data as part of this inspection to identify potential pollutant hot spots? ☐ YES ☐ NO ☐ NA, no monitoring performed

If YES, summarize the findings of that review and describe any additional inspection activities resulting from this review:

5. Describe any evidence of pollutants entering the drainage system or discharging to surface waters, and the condition of and around outfalls, including flow dissipation measures to prevent scouring:

6. Have you taken or do you plan to take any corrective actions, as specified in Part 3 of the permit, since your last annual report submission (or since you received authorization to discharge under this permit if this is your first annual report), including any corrective actions identified as a result of this annual comprehensive site inspection?
☐ YES ☐ NO

If YES, how many conditions requiring review for correction action as specified in Parts 3.1 and 3.2 were addressed by these corrective actions? ☐☐

NOTE: *Complete the attached Corrective Action Form (Section D) for each condition identified, including any conditions identified as a result of this comprehensive stormwater inspection.*

NPDES Permit Tracking No.:

M	A	R	0	5	J	0	0	F	

C. INDUSTRIAL ACTIVITY AREA SPECIFIC FINDINGS

Complete one block for each industrial activity area where pollutants may be exposed to stormwater. Copy this page for additional industrial activity areas.

In reviewing each area, you should consider:

- Industrial materials, residue, or trash that may have or could come into contact with stormwater;
- Leaks or spills from industrial equipment, drums, tanks, and other containers;
- Offsite tracking of industrial or waste materials from areas of no exposure to exposed areas; and
- Tracking or blowing of raw, final, or waste materials from areas of no exposure to exposed areas.

INDUSTRIAL ACTIVITY AREA APRON AREAS:

1. Brief Description**:**

2. Are any control measures in need of maintenance or repair? ☐ YES ☐ NO

3. Have any control measures failed and require replacement? ☐ YES ☐ NO

4. Are any additional/revised control measures necessary in this area? ☐ YES ☐ NO

If YES to any of these three questions, provide a description of the problem: (Any necessary corrective actions should be described on the attached Corrective Action Form)

INDUSTRIAL ACTIVITY AREA _____:

1. Brief Description:

2. Are any control measures in need of maintenance or repair? ☐ YES ☐ NO

3. Have any control measures failed and require replacement? ☐ YES ☐ NO

4. Are any additional/revised c necessary in this area? ☐ YES ☐ NO

If YES to any of these three questions, provide a description of the problem: (Any necessary corrective actions should be described on the attached Corrective Action Form)

INDUSTRIAL ACTIVITY AREA _____:

Brief Description:

2. Are any control measures in need of maintenance or repair? ☐ YES ☐ NO

3. Have any control measures failed and require replacement? ☐ YES ☐ NO

4. Are any additional/revised BMPs necessary in this area? ☐ YES ☐ NO

If YES to any of these three questions, provide a description of the problem: (Any necessary corrective actions should be described on the attached Corrective Action Form)

NPDES Permit Tracking No.:

M	A	R	0	5	J	0	0	F	

D. CORRECTIVE ACTIONS

Complete this page for each specific condition requiring a corrective action or a review determining that no corrective action is needed. Copy this page for additional corrective actions or reviews.

Include both corrective actions that have been initiated or completed since the last annual report, and future corrective actions needed to address problems identified in this comprehensive stormwater inspection. Include an update on any outstanding corrective actions that had not been completed at the time of your previous annual report.

1. Corrective Action # ___ of ___ for this reporting period.

2. Is this corrective action:

   ☐ An update on a corrective action from a previous annual report; or

   ☐ A new corrective action?

3. Identify the condition(s) triggering the need for this review:

   ☐ Unauthorized release or discharge

   ☐ Numeric effluent limitation exceedance

   ☐ Control measures inadequate to meet applicable water quality standards

   ☐ Control measures inadequate to meet non-numeric effluent limitations

   ☐ Control measures not properly operated or maintained

   ☐ Change in facility operations necessitated change in control measures

   ☐ Average benchmark value exceedance

   ☐ Other (describe): _____

4. Briefly describe the nature of the problem identified:

5. Date problem identified: __ / __ / ____

6. How problem was identified:

   ☐ Comprehensive site inspection

   ☐ Quarterly visual assessment

   ☐ Routine facility inspection

   ☐ Benchmark monitoring

   ☐ Notification by EPA or State or local authorities

   ☐ Other (describe): _____

7. Description of corrective action(s) taken or to be taken to eliminate or further investigate the problem (e.g., describe modifications or repairs to control measures, analyses to be conducted, etc.) or if no modifications are needed, basis for that determination:

8. Did/will this corrective action require modification of your SWPPP? ☐ YES ☐ NO

9. Date corrective action initiated: __ / __ / ____

10. Date correction action completed: __ / __ / ____ or expected to be completed: __ / __ / ____

11. If corrective action not yet completed, provide the status of corrective action at the time of the comprehensive site inspection and describe any remaining steps (including timeframes associated with each step) necessary to complete corrective action:

NPDES Permit Tracking No.: MAR05J00F

E. ANNUAL REPORT CERTIFICATION

1. Compliance Certification

Do you certify that your annual inspection has met the requirements of Part 4.2 of the permit, and that, based upon the results of this inspection, to the best of your knowledge, you are in compliance with the permit? ☐ YES ☐ NO

If NO, summarize why you are not in compliance with the permit:

2. Annual Report Certification

I certify under penalty of law that this document and all attachments were prepared under my direction or supervision in accordance with a system designed to assure that qualified personnel properly gathered and evaluated the information submitted. Based on my inquiry of the person or persons who manage the system, or those persons directly responsible for gathering the information, the information submitted is, to the best of my knowledge and belief, true, accurate, and complete. I am aware that there are significant penalties for submitting false information, including the possibility of fine and imprisonment for knowing violations.

Authorized Representative Printed Name: ARTHUR LISENBY

Title: AIRPORT MANAGER

Signature: _____

Date Signed: _____

SECTION 4: EPA 2015 Multi-Sector General Permit (MSGP)

UNITED STATES ENVIRONMENTAL PROTECTION AGENCY (EPA) NATIONAL POLLUTANT DISCHARGE ELIMINATION SYSTEM (NPDES) MULTI-SECTOR GENERAL PERMIT FOR STORMWATER DISCHARGES ASSOCIATED WITH INDUSTRIAL ACTIVITY (MSGP)

In compliance with the provisions of the Clean Water Act (CWA), as amended (33 U.S.C. 1251 *et seq.*), operators of stormwater discharges associated with industrial activity located in an area identified in Appendix C where EPA is the permitting authority are authorized to discharge to waters of the United States in accordance with the eligibility and Notice of Intent (NOI) requirements, effluent limitations, inspection requirements, and other conditions set forth in this permit. This permit is structured as follows:

- General requirements that apply to all facilities are found in Parts 1 through 7;
- Industry sector-specific requirements are found in Part 8; and
- Specific requirements that apply in individual states and Indian country are found in Part 9.

The Appendices (A through P) contain additional permit conditions that apply to all operators covered under this permit.

This permit becomes effective on June 4, 2015. For areas in the State of Washington (except for Indian country) subject to industrial activity by a Federal Operator, this permit becomes effective on July 21, 2015. For the State of Idaho (except for Indian country), and for industrial activities on Spokane Tribe of Indians lands, this permit becomes effective August 12, 2015.

This permit and the authorization to discharge shall expire at midnight, June 4, 2020.

Signed and issued this 4th day of June, 2015

Deborah Szaro
Acting Regional Administrator, EPA Region 1

Signed and issued this 4th day of June, 2015

José C. Font
Director, Caribbean Environmental Protection Division, EPA Region 2

Signed and issued this 4th day of June, 2015

Jon. M Capacasa
Water Protection Division, EPA Region 3

Signed and issued this 4th day of June, 2015

Tinka G. Hyde
Director, Water Division, EPA Region 5

Signed and issued this 4th day of June, 2015

William K. Honker
Director, Water Quality Protection Division, EPA Region 6

Signed and issued this 4th day of June, 2015

Karen Flournoy
Director, Water, Wetlands, and Pesticides Division, EPA Region 7

Signed and issued this 4th day of June, 2015

Darcy O'Connor
Acting Assistant Regional Administrator, EPA Region 8

Signed and issued this 4th day of June, 2015

Nancy Woo
Acting Director, Water Division, EPA Region 9

Signed and issued this 4th day of June, 21st day of July, and 12th day of August, 2015

Daniel D. Opalski
Director, Office of Water and Watersheds, EPA Region 10

NPDES MULTI-SECTOR GENERAL PERMIT FOR STORMWATER DISCHARGES ASSOCIATED WITH INDUSTRIAL ACTIVITY

TABLE OF CONTENTS

1. Coverage Under this Permit. 1
1.1 Eligibility. 1
1.1.1 Facilities Covered. 1
1.1.2 Allowable Stormwater Discharges. 1
1.1.2.1 Stormwater discharges associated with industrial activity for any primary industrial activities and co-located industrial activities, as defined in Appendix A, except for any stormwater discharges specifically prohibited in Part 8; 1
1.1.2.2 Discharges designated by EPA as needing a stormwater permit as provided in Sector AD; 1
1.1.2.3 Discharges that are not otherwise required to obtain NPDES permit authorization but are mixed with discharges that are authorized under this permit; and 1
1.1.2.4 Stormwater discharges from facilities subject to any of the national stormwater-specific effluent limitations guidelines listed in Table 1-1. 1
1.1.3 Allowable Non-Stormwater Discharges. 2
1.1.3.1 Allowable Non-Stormwater Discharges for all Sectors of Industrial Activity: 2
1.1.3.2 Additional Allowable Non-Stormwater Discharge for Sector A: 3
1.1.3.3 Additional Allowable Non-Stormwater Discharges for Earth-Disturbing Activities Conducted Prior to Active Mining Activities for Sectors G, H and J: 3
1.1.4 Limitations on Coverage. 3
1.1.4.1 For Discharges Mixed with Non-Stormwater. 3
1.1.4.2 For Stormwater Discharges Associated with Construction Activity. 3
1.1.4.3 For Discharges Currently or Previously Covered by Another Permit. 4
1.1.4.4 For Stormwater Discharges Subject to Effluent Limitations Guidelines. 4
1.1.4.5 Endangered and Threatened Species and Critical Habitat Protection. 4
1.1.4.6 Historic Properties Preservation. 6
1.1.4.7 Eligibility for New Dischargers and New Sources: Based on Water Quality Standards. 6
1.1.4.8 Eligibility for New Dischargers and New Sources to Water-Quality Impaired Waters. 7
1.1.4.9 Eligibility for New Dischargers and New Sources to Waters with High Water Quality. 8
1.1.4.10 For Discharges to a Federal CERCLA Site. 8
1.2 Authorization Under this Permit. 9
1.2.1 How to Obtain Authorization. 9
1.2.1.1 Submitting Your NOI. 9
1.2.1.2 How to Submit Your NOI. 9
1.2.1.3 Deadlines for Submitting Your NOI and Your Official Date of Permit Coverage. 9
1.2.2 Continuation of Coverage for Existing Permittees After the Permit Expires. 11
1.2.3 Coverage Under Alternative Permits. 11
1.2.3.1 Denial of Coverage for New or Previously Unpermitted Facilities. 11
1.2.3.2 Loss of Authorization Under the 2015 MSGP for Existing Permitted Facilities. 11
1.2.3.3 Operator Requesting Coverage Under an Alternative Permit. 12
1.3 Terminating Coverage. 12
1.3.1 Submitting a Notice of Termination (NOT). 12
1.3.2 How to Submit Your NOT. 12

1.3.3 When to Submit Your NOT. 12
1.4 Conditional Exclusion for No Exposure. 12
1.5 Permit Compliance. 13
1.6 Severability. 13
2. Control Measures and Effluent Limits. 14
2.1 Control Measures. 14
2.1.1 Control Measure Selection and Design Considerations. 14
2.1.2 Non-Numeric Technology-Based Effluent Limits (BPT/BAT/BCT) 15
2.1.2.1 Minimize Exposure. 15
2.1.2.2 Good Housekeeping. 15
2.1.2.3 Maintenance. 16
2.1.2.4 Spill Prevention and Response. 17
2.1.2.5 Erosion and Sediment Controls. 17
2.1.2.6 Management of Runoff. 18
2.1.2.7 Salt Storage Piles or Piles Containing Salt. 18
2.1.2.8 Employee Training. 18
2.1.2.9 Non-Stormwater Discharges. 19
2.1.2.10 Dust Generation and Vehicle Tracking of Industrial Materials. 19
2.1.3 Numeric Effluent Limitations Based on Effluent Limitations Guidelines. 19
2.2 Water Quality-Based Effluent Limitations. 20
2.2.1 Water Quality Standards. 20
2.2.2 Discharges to Water Quality-Impaired Waters. 20
2.2.2.1 Existing Discharge to an Impaired Water with an EPA-Approved or Established TMDL. 20
2.2.2.2 Existing Discharger to an Impaired Water without an EPA-Approved or Established TMDL. 20
2.2.2.3 New Discharger or New Source to an Impaired Water. 21
2.2.3 Tier 2 Antidegradation Requirements for New Dischargers, New Sources, or Increased Discharges. 21
2.3 Requirements Relating to Endangered Species, Historic Properties, and Federal CERCLA Sites. 21
3. Inspections. 22
3.1 Routine Facility Inspections. 22
3.1.1 Exceptions to Routine Facility Inspections for Inactive and Unstaffed Sites. 22
3.1.2 Routine Facility Inspection Documentation. 23
3.2 Quarterly Visual Assessment of Stormwater Discharges. 24
3.2.1 Quarterly Visual Assessment Procedures. 24
3.2.2 Quarterly Visual Assessment Documentation. 24
3.2.3 Exceptions to Quarterly Visual Assessments. 25
4. Corrective Actions. 27
4.1 Conditions Requiring SWPPP Review and Revision to Ensure Effluent Limits are Met. 27
4.2 Conditions Requiring SWPPP Review to Determine if Modifications Are Necessary. 27
4.3 Corrective Actions and Deadlines. 28
4.3.1 Immediate Actions. 28
4.3.2 Subsequent Actions. 28
4.4 Corrective Action Documentation. 28
4.5 Effect of Corrective Action. 29
4.6 Substantially Identical Outfalls. 29
5. Stormwater Pollution Prevention Plan (SWPPP). 30
5.1 Person(s) Responsible for SWPPP Preparation. 30
5.2 Contents of Your SWPPP. 30
5.2.1 Stormwater Pollution Prevention Team. 31

5.2.2 Site Description. 31
5.2.3 Summary of Potential Pollutant Sources. 32
5.2.3.1 Activities in the Area. 32
5.2.3.2 Pollutants. 32
5.2.3.3 Spills and Leaks. 32
5.2.3.4 Unauthorized Non-Stormwater Discharges. 32
5.2.3.5 Salt Storage. 33
5.2.3.6 Sampling Data. 33
5.2.4 Description of Control Measures to Meet Technology-Based and Water Quality-Based Effluent Limits. 33
5.2.5 Schedules and Procedures. 34
5.2.5.1 Pertaining to Control Measures Used to Comply with the Effluent Limits in Part 2. 34
5.2.5.2 Pertaining to Inspections and Assessments. 34
5.2.5.3 Pertaining to Monitoring. 35
5.2.6 Documentation to Support Eligibility Considerations Under Other Federal Laws. 36
5.2.6.1 Documentation Regarding Endangered and Threatened Species and Critical Habitat Protection. 36
5.2.6.2 Documentation Regarding Historic Properties. 36
5.2.7 Signature Requirements. 36
5.3 Required SWPPP Modifications. 36
5.4 SWPPP Availability. 36
5.4.1 SWPPP Posting on the Internet. 36
5.4.2 SWPPP Information Provided on NOI Form. 37
5.5 Additional Documentation Requirements. 37
6. Monitoring. 39
6.1 Monitoring Procedures. 39
6.1.1 Monitored Outfalls. 39
6.1.2 Commingled Discharges. 39
6.1.3 Measurable Storm Events. 39
6.1.4 Sample Type. 39
6.1.5 Adverse Weather Conditions. 39
6.1.6 Climates with Irregular Stormwater Runoff. 40
6.1.7 Monitoring Periods. 40
6.1.8 Monitoring for Allowable Non-Stormwater Discharges. 40
6.1.9 Monitoring Reports 40
6.2 Required Monitoring. 40
6.2.1 Benchmark Monitoring. 41
6.2.1.1 Applicability of Benchmark Monitoring. 41
6.2.1.2 Benchmark Monitoring Schedule. 41
6.2.1.3 Exception for Inactive and Unstaffed Sites. 43
6.2.2 Effluent Limitations Monitoring. 43
6.2.2.1 Monitoring Based on Effluent Limitations Guidelines. 43
6.2.2.2 Substantially Identical Outfalls. 44
6.2.2.3 Follow-up Actions if Discharge Exceeds Numeric Effluent Limitation. 44
6.2.3 State or Tribal Monitoring Provisions. 44
6.2.3.1 Sectors Required to Conduct State or Tribal Monitoring. 44
6.2.3.2 State or Tribal Monitoring Schedule. 44
6.2.4 Discharges to Impaired Waters Monitoring. 45
6.2.4.1 Permittees Required to Monitor Discharges to Impaired Waters. 45
6.2.4.2 Exception for Inactive and Unstaffed Sites. 46
6.2.5 Additional Monitoring Required by EPA. 46
7. Reporting and Recordkeeping. 47

7.1 Electronic Reporting Requirement. 47
7.2 Submitting Information to EPA. 47
7.3 Additional SWPPP Information Required in Your NOI. 48
7.4 Reporting Monitoring Data to EPA. 48
7.5 Annual Report. 49
7.6 Exceedance Report for Numeric Effluent Limitations. 50
7.7 Additional Reporting. 50
7.8 Recordkeeping. 51
7.9 Addresses for Reports. 51
7.9.1 EPA Addresses. 51
7.9.1.1 Region 1: Connecticut, Massachusetts, and New Hampshire, Rhode Island, Vermont. 51
7.9.1.2 Region 2: New Jersey, New York, Puerto Rico, and Virgin Islands. 51
7.9.1.3 Region 3: Delaware, District of Columbia, Maryland, Pennsylvania, Virginia, West Virginia. 52
7.9.1.4 Region 4: Alabama, Florida, Georgia, Kentucky, Mississippi, North Carolina, South Carolina, Tennessee. 52
7.9.1.5 Region 5: Illinois, Indiana, Michigan, Minnesota, Ohio, Wisconsin. 52
7.9.1.6 Region 6: Arkansas, Louisiana, Oklahoma, Texas, and New Mexico (except see Region 9 for Navajo lands, and see Region 8 for Ute Mountain Reservation lands). 52
7.9.1.7 Region 7: Iowa, Kansas, Missouri, Nebraska. 52
7.9.1.8 Region 8: Colorado, Montana, North Dakota, South Dakota, Wyoming, Utah (except see Region 9 for Goshute Reservation and Navajo Reservation lands), the Ute Mountain Reservation in New Mexico, and the Pine Ridge Reservation in Nebraska. 52
7.9.1.9 Region 9: Arizona, California, Hawaii, Nevada, Guam, American Samoa, the Commonwealth of the Northern Mariana Islands, the Goshute Reservation in Utah and Nevada, the Navajo Reservation in Utah, New Mexico, and Arizona, the Duck Valley Reservation in Idaho, Fort McDermitt Reservation in Oregon. 52
7.9.1.10 Region 10: Alaska, Idaho, Oregon (except see Region 9 for Fort McDermitt Reservation), Washington. 53
7.9.2 State and Tribal Addresses. 53

8. Sector Specific Requirements 54
8A. Sector A: Timber Products 54
8B. Sector B: Paper and Allied Products 57
8C. Sector C: Chemicals and Allied Products Manufacturing 58
8D. Sector D: Asphalt Paving and Roofing Materials and Lubricant Manufacturing 61
8E. Sector E: Glass, Clay, Cement, Concrete, and Gypsum Products 63
8F. Sector F: Primary Metals 65
8G. Sector G: Metal Mining (Ore Mining and Dressing) 68
8H. Sector H: Coal Mines and Coal Mining-Related Facilities 86
8I. Sector I: Oil and Gas Extraction and Refining 99
8J. Sector J: Mineral Mining and Dressing 101
8K. Sector K: Hazardous Waste Treatment, Storage, or Disposal Facilities 115
8L. Sector L: Landfills, Land Application Sites, and Open Dumps 119
8M. Sector M: Automobile Salvage Yards 123
8N. Sector N: Scrap Recycling Facilities 125
8O. Sector O: Steam Electric Generating Facilities 131
8P. Sector P: Land Transportation and Warehousing 135
8Q. Sector Q: Water Transportation 138
8R. Sector R: Ship and Boat Building and Repairing Yards 141

8S. Sector S: Air Transportation Facilities 144
8T. Sector T: Treatment Works 151
8U. Sector U: Food and Kindred Products 153
8V. Sector V: Textile Mills, Apparel, and Other Fabric Product Manufacturing; Leather and Leather Products 155
8W. Sector W: Furniture and Fixtures 157
8X. Sector X: Printing and Publishing 158
8Y. Sector Y: Rubber, Miscellaneous Plastic Products, and Miscellaneous Manufacturing Industries 160
8Z. Sector Z: Leather Tanning and Finishing 162
8AA. Sector AA: Fabricated Metal Products 164
8AB. Sector AB: Transportation Equipment, Industrial or Commercial Machinery 167
8AC. Sector AC: Electronic, Electrical, Photographic, and Optical Goods 168
8AD. Sector AD: Non-Classified Facilities 169
9. State/Tribal Specific Requirements 170
Appendix A Definitions and Acronyms A-1
Appendix B Standard Permit Conditions B-1
Appendix C Areas Covered C-1
Appendix D Activities Covered D-1
Appendix E Procedures relating to Endangered Species E-1
Appendix F National Historic Preservation Act Procedures F-1
Appendix G Notice of Intent G-1
Appendix H Notice of Termination H-1
Appendix I Annual Reporting Form I-1
Appendix J Calculating Hardness in Receiving Waters for Hardness Dependent Metals J-1
Appendix K No Exposure Certification K-1
Appendix L List of Tier 3, Tier 2, and Tier 2.5 Waters L-1
Appendix M Discharge Monitoring Report (DMR) Form M-1
Appendix N List of SIC and NAICS Codes N-1
Appendix O Summary of Permit Reports and Submittals O-1
Appendix P List of Federal CERCLA Sites P-1

1. Coverage Under this Permit.

1.1 Eligibility.

1.1.1 Facilities Covered.

To be eligible to discharge under this permit, you must (1) have an allowable stormwater discharge or an allowable non-stormwater discharge associated with industrial activity from your primary industrial activity, as defined in Appendix A, provided your primary industrial activity is included in Appendix D, or (2) be notified by EPA that you are eligible for coverage under Sector AD of this permit. Your facility must also be located in an area where EPA is the permitting authority (see Appendix C).

1.1.2 Allowable Stormwater Discharges.

Unless otherwise made ineligible under Part 1.1.4, the following discharges are eligible for coverage under this permit:

1.1.2.1 Stormwater discharges associated with industrial activity for any primary industrial activities and co-located industrial activities, as defined in Appendix A, except for any stormwater discharges specifically prohibited in Part 8;

1.1.2.2 Discharges designated by EPA as needing a stormwater permit as provided in Sector AD;

1.1.2.3 Discharges that are not otherwise required to obtain NPDES permit authorization but are mixed with discharges that are authorized under this permit; and

1.1.2.4 Stormwater discharges from facilities subject to any of the national stormwater-specific effluent limitations guidelines listed in Table 1-1.

Table 1-1. Stormwater-Specific Effluent Limitations Guidelines

Regulated Discharge	40 CFR Section	MSGP Sector	New Source Performance Standard (NSPS)	New Source Date
Discharges resulting from spray down or intentional wetting of logs at wet deck storage areas	Part 429, Subpart I	A	Yes	1/26/81
Runoff from phosphate fertilizer manufacturing facilities that comes into contact with any raw materials, finished product, by-products or waste products (SIC 2874)	Part 418, Subpart A	C	Yes	4/8/74
Runoff from asphalt emulsion facilities	Part 443, Subpart A	D	Yes	7/28/75
Runoff from material storage piles at cement manufacturing facilities	Part 411, Subpart C	E	Yes	2/20/74
Mine dewatering discharges at crushed stone, construction sand and gravel, or industrial sand mining facilities	Part 436, Subparts B, C, and D	J	No	N/A
Runoff from hazardous waste and non-hazardous waste landfills	Part 445, Subparts A and B	K, L	Yes	2/2/00
Runoff from coal storage piles at steam electric generating facilities	Part 423	O	Yes	11/19/82 (10/8/74)[1]

1 NSPS promulgated in 1974 were not removed via the 1982 regulation; therefore wastewaters generated by Part 423-applicable sources that were New Sources under the 1974 regulations are subject to the 1974 NSPS.

Regulated Discharge	40 CFR Section	MSGP Sector	New Source Performance Standard (NSPS)	New Source Date
Runoff containing urea from airfield pavement deicing at existing and new primary airports with 1,000 or more annual non-propeller aircraft departures	Part 449	S	Yes	6/15/12

1.1.3 Allowable Non-Stormwater Discharges.

Below in Part 1.1.3.1 are the only non-stormwater discharges authorized under this permit for all sectors provided that all discharges comply with the effluent limits set forth in Parts 2 and 8. In addition to the authorized non-stormwater discharges in Part 1.1.3.1 applicable to all sectors, for Sector A, there is an additional non-stormwater discharge in Part 1.1.3.2 below, and for the mining sectors (Sectors G, H, and J), there are additional authorized non-stormwater discharges in Part 1.1.3.3 below. The additional allowable non-stormwater discharges for Sectors G, H, and J apply only to discharges from earth-disturbing activities conducted prior to active mining activities as defined in Part 8.G.3.2, 8.H.3.2, and 8.J.3.2 provided that, with the exception of water used to control dust and to irrigate areas to be vegetatively stabilized, these discharges are not routed to areas of exposed soil and all discharges comply with the permit's effluent limits.

Also allowed for all sectors are discharges of stormwater listed above in Parts 1.1.2 or authorized non-stormwater discharges in Part 1.1.3, mixed with a discharge authorized by a different NPDES permit and/or a discharge that does not require NPDES permit authorization. All other non-stormwater discharges requiring NPDES permit coverage except those specifically listed in Part 1.1.3 are not authorized by this permit. If non-stormwater discharges requiring NPDES permit coverage other than those specifically authorized in Part 1.1.3, including sector-specific non-stormwater discharges that are listed in Part 8 as prohibited (a non-exclusive list provided to raise awareness of contaminants or sources of contaminants characteristic of certain sectors), will be discharged, such non-stormwater discharges are not authorized by this permit and must either be eliminated or covered under another NPDES permit.

1.1.3.1 Allowable Non-Stormwater Discharges for all Sectors of Industrial Activity:

- Discharges from emergency/unplanned fire-fighting activities;
- Fire hydrant flushings;
- Potable water, including water line flushings;
- Uncontaminated condensate from air conditioners, coolers/chillers, and other compressors and from the outside storage of refrigerated gases or liquids;
- Irrigation drainage;
- Landscape watering provided all pesticides, herbicides, and fertilizers have been applied in accordance with the approved labeling;
- Pavement wash waters where no detergents or hazardous cleaning products are used (e.g., bleach, hydrofluoric acid, muriatic acid, sodium hydroxide, nonylphenols), and the wash waters do not come into contact with oil and grease deposits, sources of pollutants associated with industrial activities (see Part 5.2.3), or any other toxic or hazardous materials, unless residues are first cleaned up using dry clean-up methods (e.g., applying absorbent materials and sweeping, using hydrophobic mops/rags) and you have implemented

appropriate control measures to minimize discharges of mobilized solids and other pollutants (e.g., filtration, detention; settlement);

- Routine external building washdown / power wash water that does not use detergents or hazardous cleaning products (e.g., those containing bleach, hydrofluoric acid, muriatic acid, sodium hydroxide, nonylphenols);
- Uncontaminated ground water or spring water;
- Foundation or footing drains where flows are not contaminated with process materials; and
- Incidental windblown mist from cooling towers that collects on rooftops or adjacent portions of your facility, but not intentional discharges from the cooling tower (e.g., "piped" cooling tower blowdown; drains).

1.1.3.2 ***Additional Allowable Non-Stormwater Discharge for Sector A:*** Discharges from the spray down of lumber and wood product storage yards where no chemical additives are used in the spray-down waters and no chemicals are applied to the wood during storage (applicable only to Sector A facilities provided the non-stormwater component of the discharge is in compliance with the non-numeric effluent limits requirements in Part 2.1.2).

1.1.3.3 ***Additional Allowable Non-Stormwater Discharges for Earth-Disturbing Activities Conducted Prior to Active Mining Activities for Sectors G, H and J:***

- Water used to wash vehicles and equipment, provided that there is no discharge of soaps, solvents, or detergents used for such purposes;
- Water used to control dust; and
- Dewatering water that has been treated by an appropriate control under Parts 8.G.4.2.9, 8.H.4.2.9, or 8.J.4.2.9.

Note: These non-stormwater discharges are only authorized for earth-disturbing activities conducted prior to active mining activities, as defined in Part 8.G.3.2, 8.H.3.2, and 8.J.3.2. Once the earth-disturbing activities conducted prior to active mining activities have ceased, the only allowable non-stormwater discharges for Sectors G, H, and J are those listed in Part 1.1.3.1.

1.1.4 Limitations on Coverage.

Any discharges not expressly authorized in this permit cannot become authorized or shielded from liability under Clean Water Act (CWA) section 402(k) by disclosure to EPA, state, or local authorities after issuance of this permit via any means, including the Notice of Intent (NOI) to be covered by the permit, the Stormwater Pollution Prevention Plan (SWPPP), or during an inspection.

1.1.4.1 ***For Discharges Mixed with Non-Stormwater.*** Stormwater discharges that are mixed with non-stormwater discharges, other than those mixed with allowable non-stormwater discharges listed in Part 1.1.3 and/or those mixed with a discharge authorized by a different NPDES permit and/or a discharge that does not require NPDES authorization, are not eligible for coverage under this permit.

1.1.4.2 ***For Stormwater Discharges Associated with Construction Activity.*** Stormwater discharges associated with construction activity disturbing one acre or more, or that are part of a larger common plan of development or sale if the larger common plan will ultimately disturb one acre or more, are not eligible for coverage

under this permit, unless in conjunction with mining activities or certain oil and gas extraction activities as specified in Sectors G, H, I, and J of this permit.

1.1.4.3 ***For Discharges Currently or Previously Covered by Another Permit.*** Unless you have received written notification from EPA specifically allowing these discharges to be covered under this permit, you are not eligible for coverage under this permit for any of the following:

- Stormwater discharges associated with industrial activity that are currently covered under an individual NPDES permit or an alternative NPDES general permit;
- Discharges covered within five years prior to the effective date of this permit by an individual permit or alternative general permit where that permit established site-specific numeric water quality-based limitations developed for the stormwater component of the discharge; or
- Discharges from facilities where any NPDES permit has been or is in the process of being denied, terminated, or revoked by EPA (this does not apply to the routine reissuance of permits every five years).

1.1.4.4 ***For Stormwater Discharges Subject to Effluent Limitations Guidelines.*** For discharges from facilities subject to stormwater effluent limitation guidelines under 40 CFR, Subchapter N, only those stormwater discharges identified in Table 1-1 are eligible for coverage under this permit.

1.1.4.5 ***Endangered and Threatened Species and Critical Habitat Protection.*** Coverage under this permit is available only if your stormwater discharges, allowable non-stormwater discharges, and stormwater discharge-related activities were the subject of an Endangered Species Act (ESA) consultation or an ESA section 10 permit, or if your stormwater discharges, allowable non-stormwater discharges, and stormwater discharge-related activities are not likely to adversely affect any species that are federally listed as endangered or threatened ("listed") and are not likely to adversely affect habitat that is designated as "critical habitat" under the ESA. You must meet one of the criteria below, following the procedures in Appendix E:

Criterion A. No federally listed threatened or endangered species or their designated critical habitat(s) are likely to occur in the "action area" as defined in Appendix A. To certify your eligibility under this criterion, you must use the *Criterion Selection Worksheet* in Part E.4 of Appendix E. You must also provide a description of the basis for the criterion you selected on your NOI form and provide documentation supporting your eligibility determination in your SWPPP.

Criterion B. Your industrial activity's discharges and discharge-related activities were already addressed in another operator's valid certification of eligibility for your action area under this permit, and there is no reason to believe that federally listed species or designated critical habitat not considered in the prior certification may be present or located in the "action area" (e.g., due to a new species listing or critical habitat designation). To certify your eligibility under this criterion, you must use the *Criterion Selection Worksheet* in Part E.4 of Appendix E. There must be no lapse of NPDES permit coverage in the other operator's certification. You must also comply with any additional measures that formed the basis of the other operator's valid certification of eligibility to ensure that your discharges and discharge-related

activities are protective of listed species and/or critical habitat. You must include in your NOI the NPDES ID (i.e., permit tracking number) assigned to the other operator's authorization under this permit, and a description of the basis for the criterion selected on your NOI form, including the eligibility criterion selected by the other operator's certification. You must also provide any documentation in your SWPPP that supports the other operator's eligibility determination, including any additional measures that formed the basis of the other operator's eligibility determination.

Criterion C. Federally listed threatened or endangered species or their designated critical habitat(s) are likely to occur in or near your facility's "action area," and your industrial activity's discharges and discharge-related activities are not likely to adversely affect listed threatened or endangered species or critical habitat. To certify your eligibility under this criterion, you must use the *Criterion Selection Worksheet* in Part E.4 of Appendix E, including completion of the *Criterion C Eligibility Form*, which you must submit to EPA at least 30 days prior to filing your NOI for permit coverage. After evaluation of your *Criterion C Eligibility Form*, EPA may require additional measures that you must implement to avoid or eliminate likely adverse effects on listed species and critical habitat from discharges and discharge-related activities. You may submit your NOI for permit coverage 30 days after submitting to EPA your completed *Criterion C worksheet*. You must also provide a description of the basis for the criterion you selected on your NOI form and provide documentation supporting your eligibility determination in your SWPPP.

Criterion D. Consultation between a Federal Agency and the U.S. Fish and Wildlife Service and/or the National Marine Fisheries Service under section 7 of the ESA has been concluded. Consultations can be either formal or informal, and would have occurred only as a result of a separate federal action (e.g., during application for an individual wastewater discharge permit or the issuance of a wetlands dredge and fill permit), and consultation must have addressed the effects of the industrial activity's discharges and discharge-related activities on federally listed threatened or endangered species and designated critical habitat. The result of this consultation must be one of the following:

i. A biological opinion that concludes that the action in question (taking into account the effects of your facility's discharges and discharge-related activities) is not likely to jeopardize the continued existence of listed species, or result in the destruction or adverse modification of critical habitat;

ii. A biological opinion that concludes that the action is likely to jeopardize listed species or to result in the destruction or adverse modification of critical habitat, and any recommended reasonable and prudent alternatives or reasonable and prudent measures are being implemented; or

iii. Written concurrence from the applicable Service(s) with a finding that the facility's discharges and discharge-related activities are not likely to adversely affect listed species or critical habitat.

To certify your eligibility under this criterion, you must use the *Criterion Selection Worksheet* in Part E.4 of Appendix E. You must verify that the consultation does not warrant reinitiation under 50 CFR §402.16. If reinitiation of consultation is required, in order to be eligible under this Criterion you must ensure consultation is reinitiated and the result of the consultation must be consistent with (i), (ii), or (iii) above.

If eligible, you must also provide supporting documentation for your determination in your NOI and SWPPP, including the Biological Opinion (or PCTS tracking number) or concurrence letter.

Criterion E. Your industrial activities are the subject of a permit under section 10 of the ESA, and this authorization addresses the effects of your facility's discharges and discharge-related activities on federally listed species and designated critical habitat. To certify your eligibility under this criterion, you must use the *Criterion Selection Worksheet*. You must also provide supporting documentation for your determination in your NOI and SWPPP, including a copy of the permit from the Services.

You must comply with any measures that formed the basis of your eligibility determination in Part 1.1.4.5 to be in compliance with the permit. These measures become permit requirements per Part 2.3. Documentation of these measures must be kept as part of your SWPPP (see Part 5.2.6.1).

1.1.4.6 ***Historic Properties Preservation.*** Coverage under this permit is available only if your stormwater discharges, allowable non-stormwater discharges, and stormwater discharge-related activities meet one of the eligibility criteria below, following the procedures in Appendix F:

Criterion A. Your stormwater discharges and allowable non-stormwater discharges do not have the potential to have an effect on historic properties and you are not constructing or installing new stormwater control measures on your site that cause subsurface disturbance; or

Criterion B. Your discharge-related activities (i.e., construction and/or installation of stormwater control measures that involve subsurface disturbance) will not affect historic properties; or

Criterion C. Your stormwater discharges, allowable non-stormwater discharges, and discharge-related activities have the potential to have an effect on historic properties, and you have consulted with the State Historic Preservation Officer (SHPO), Tribal Historic Preservation Officer (THPO), or other tribal representative regarding measures to mitigate or prevent any adverse effects on historic properties, and you have either (1) obtained and are in compliance with a written agreement that outlines all such measures, or (2) been unable to reach agreement on such measures; or

Criterion D. You have contacted the SHPO, THPO, or other tribal representative and EPA in writing informing them that you have the potential to have an effect on historic properties and you did not receive a response from the SHPO, THPO, or tribal representative within 30 days of receiving your letter.

If you have been unable to reach agreement with a SHPO, THPO, or other tribal representative regarding appropriate measures to mitigate or prevent adverse effects, EPA may notify you of additional measures you must implement to be eligible for coverage under this permit.

1.1.4.7 ***Eligibility for New Dischargers and New Sources: Based on Water Quality Standards.*** If you are a new discharger or a new source (as defined in Appendix A), you are ineligible for coverage under this permit if EPA determines prior to your authorization to discharge that your discharges will not meet an applicable water

quality standard (i.e., your discharges will cause or contribute to an exceedance of a water quality standard). In such case, EPA may notify you that an individual permit application is necessary per Part 1.2.3, or, alternatively, EPA may authorize your coverage under this permit after you implement additional control measures so that your discharges will meet water quality standards.

1.1.4.8 ***Eligibility for New Dischargers and New Sources to Water-Quality Impaired Waters.*** If you are a new discharger or a new source (as defined in Appendix A), you are ineligible for coverage under this permit to discharge to an "impaired water" (as defined in Appendix A) unless you do one of the following:

a. Prevent all exposure to stormwater of the pollutant(s) for which the waterbody is impaired, and retain documentation of procedures taken to prevent exposure onsite with your SWPPP;

b. Prior to submitting your NOI, provide to the appropriate EPA Regional Office technical information or other documentation to support your claim that the pollutant(s) for which the waterbody is impaired is not present at your site, and retain such documentation with your SWPPP; or

c. Prior to submitting your NOI, provide information to the appropriate EPA Regional Office, either data or other technical documentation, to support a conclusion that the discharge is expected to meet applicable water quality standards (i.e., that pollutants of concern will not be discharged at levels that will cause or contribute to an exceedance of a water quality standard), and retain such information with your SWPPP. The information to be submitted must be sufficient to demonstrate:

   i. For discharges to waters without an EPA-approved or established total maximum daily load (TMDL), that the discharge of the pollutant for which the water is impaired will meet water quality standards at the point of discharge to the waterbody; or

   ii. For discharges to waters with an applicable EPA-approved or established TMD), that there are, in accordance with 40 CFR 122.4(i), sufficient remaining wasteload allocations in the TMDL to allow your discharge and that existing dischargers to the waterbody are subject to compliance schedules designed to bring the waterbody into attainment with water quality standards (e.g., a reserve allocation for future growth).

   You are eligible under Part 1.1.4.8.c if you receive a determination from the EPA Regional Office that your discharge will meet applicable water quality standards (i.e., will not cause or contribute to an exceedance of a water quality standard), and you document the Region's determination in your SWPPP. If the EPA Regional Office fails to respond to you within 30 days after submission of data, you are considered to be eligible for coverage.

Note: For the purposes of this permit, your project is considered to discharge to an impaired water if the first water of the U.S. to which you discharge is identified by a state, tribe, or EPA as not meeting an applicable water quality standard, and:

- *Requires development of a TMDL (pursuant to section 303(d) of the CWA);*
- *Is addressed by an EPA-approved or established TMDL; or*

- *Is not in either of the above categories but the waterbody is covered by pollution control requirements that meet the requirements of 40 CFR 130.7(b)(1).*

For discharges that enter a separate storm sewer system[2] prior to discharge, the first water of the U.S. to which you discharge is the waterbody that receives the stormwater discharge from the storm sewer system.

1.1.4.9 Eligibility for New Dischargers and New Sources to Waters with High Water Quality.

For new dischargers and new sources to Tier 2 or Tier 2.5 waters:

If you are a new discharger or a new source (as defined in Appendix A), you are eligible to discharge to a Tier 2 or Tier 2.5 water only if your discharge will not lower the water quality of the applicable water. See a list of Tier 2 and Tier 2.5 waters in Appendix L.

For new dischargers and new sources to Tier 3 waters:

If you are a new discharger or a new source (as defined in Appendix A), you are not eligible for coverage under this permit for discharges to waters designated by a state or tribe as Tier 3 (outstanding national resource waters) for antidegradation purposes under 40 CFR 131.13(a)(3). Instead, you must submit an application for an individual permit. See a list of Tier 3 waters in Appendix L.

Note: For the purposes of this permit, your project is considered to discharge to a Tier 2, Tier 2.5, or Tier 3 water if the first water of the U.S. to which you discharge is identified by a state, tribe, or EPA as a Tier 2, Tier 2.5, or Tier 3 water. For discharges that enter a separate storm sewer system[2] prior to discharge, the first water of the U.S. to which you discharge is the waterbody that receives the stormwater discharge from the storm sewer system.

1.1.4.10 For Discharges to a Federal CERCLA Site. If you discharge to a federal CERCLA Site listed in Appendix P, you are ineligible for coverage under this permit, unless you notify the EPA Regional Office in advance and the EPA Regional Office determines that you are eligible for permit coverage. In determining eligibility for coverage under this Part, the EPA Regional Office may evaluate whether you are implementing or plan to implement adequate controls and/or procedures to ensure that your discharge will not lead to recontamination of aquatic media at the CERCLA Site such that your discharge will cause or contribute to an exceedance of a water quality standard. If it is determined that your facility discharges to a CERCLA Site listed in Appendix P after you have obtained coverage under this permit, you must contact the EPA Regional Office and ensure that you either have implemented or will implement adequate controls and/or procedures to ensure that your discharges will not lead to recontamination of aquatic media at the CERCLA Site such that it will to cause or contribute to an exceedance of a water quality standard.

For the purposes of this permit, a permittee discharges to a federal CERCLA Site if the discharge flows directly into the site through its own conveyance, or a through

2 Separate storm systems do not include combined sewer systems or sanitary sewer systems. Separate storm systems include both municipal storm sewer systems (MS4s) and non-municipal separate storm sewers.

a conveyance owned by others, such as a municipal separate storm sewer system (MS4).

1.2 Authorization Under this Permit.

1.2.1 How to Obtain Authorization.

To obtain authorization under this permit, you must:

- Be an operator of a primary industrial activity in a sector covered by this permit (see Appendix D);
- Be located in a state, territory, or Indian country, or be a federal operator identified in Appendix C where EPA is the permitting authority;
- Meet the Part 1.1 eligibility requirements;
- Select, design, install, and implement control measures in accordance with Part 2.1 and Part 8 to meet numeric and non-numeric effluent limits;
- Develop a SWPPP per Part 5 of this permit or update your existing SWPPP consistent with Part 5 prior to submitting your NOI for coverage under this permit; and
- Submit a complete and accurate NOI in accordance with this Part.

1.2.1.1 ***Submitting Your NOI.*** To be covered under this permit, you must submit to EPA a complete and accurate NOI by the deadline applicable to your facility presented in Table 1-2. The NOI certifies to EPA that you are eligible for coverage according to Part 1.1, and provides information on your industrial activities and related discharges.

You must complete the development of a SWPPP or update your existing SWPPP consistent with Part 5 prior to submitting your NOI for coverage under this permit. If you choose to post your SWPPP on the Internet per Part 5.4.1, you must include the URL on your NOI form and this URL must directly link to the SWPPP (not just the corporate or facility homepage). If you do not post your SWPPP online, you must enter additional facility information from your SWPPP, per Part 5.4.2.

1.2.1.2 ***How to Submit Your NOI.*** You must submit your NOI electronically per Part 7.1, unless you have received a waiver from electronic reporting per Part 7.1, in which case you may use the paper NOI form in Appendix G.

1.2.1.3 ***Deadlines for Submitting Your NOI and Your Official Date of Permit Coverage.*** Table 1-2 provides the deadlines for submitting your NOI and your official start date of permit coverage.

Table 1-2. NOI Submittal Deadlines and Discharge Authorization Dates

Category	NOI Submission Deadline	Discharge Authorization Date[1, 2]
Operators of industrial activities that were authorized for coverage under the 2008 MSGP.	No later than September 2, 2015 unless EPA notifies you that your deadline is extended.[3]	30 days after EPA notifies you that it has received a complete NOI, unless EPA notifies you that your authorization has been denied or delayed. *Note: You must review and update your SWPPP to ensure that this permit's requirements are addressed prior to submitting your NOI*. Provided you submit your NOI in accordance with the deadline, your authorization under the 2008 MSGP is automatically continued until you have been granted coverage under this permit or an alternative permit, or coverage is otherwise terminated.
Operators of industrial activities that commenced discharging between September 30, 2013 and September 2, 2015 and have been operating consistent with EPA's no action assurance for the NPDES Stormwater Multi-Sector General Permit for Industrial Activities.	As soon as possible, but no later than September 2, 2015, unless EPA notifies you that your deadline is extended.[4]	30 days after EPA notifies you that it has received a complete NOI, unless EPA notifies you that your authorization has been denied or delayed.
Operators of industrial activities that commence discharging after September 2, 2015, or operators seeking coverage for discharges previously covered under an individual permit or an alternative general permit.	A minimum of 30 days prior to commencing discharge in accordance with the terms of the 2015 MSGP.[5]	30 days after EPA notifies you that it has received a complete NOI, unless EPA notifies you that your authorization has been denied or delayed.
New operators of existing industrial activities with discharges previously authorized under the 2015 MSGP.	A minimum of 30 days prior to the date of transfer of control to the new operator.	30 days after EPA notifies you that it has received a complete NOI, unless EPA notifies you that your authorization has been denied or delayed.
Other eligible operators – Operators of industrial activities that commenced discharging prior to September 2, 2015, but not covered under the 2008 MSGP or another NPDES permit and not operating consistent with EPA's no action assurance for the NPDES Stormwater Multi-Sector General Permit for Industrial Activities.	Immediately, to minimize the time discharges from the facility will continue to be unauthorized.	30 days after EPA notifies you that it has received a complete NOI, unless EPA notifies you that your authorization has been denied or delayed.

[1] If you have missed the deadline to submit your NOI, any and all discharges from your industrial activities will continue to be unauthorized under the CWA until they are covered by this or a different NPDES permit. EPA may take enforcement action for any unpermitted discharges that occur between the commencement of discharging and discharge authorization.

[2] Discharges are not authorized if your NOI is incomplete or inaccurate or if you are ineligible for permit coverage.

[3] For federal operators of industrial activities located in the State of Washington (except Indian country) that were authorized for coverage under the 2008 MSGP, you must submit your NOI no later than October 19, 2015, unless EPA notifies you that your deadline is extended. For operators of industrial activities located in the State of Idaho (except Indian country) or on Spokane Tribe of Indians lands that were authorized for coverage under the 2008 MSGP, you must submit your NOI no later than November 10, 2015, unless EPA notifies you that your deadline is extended.

[4] For federal operators of industrial activities located in the State of Washington (except Indian country) that commence discharging between September 30, 2013 and October 19, 2015, you must submit your NOI as soon as possible, but no later than October 19, 2015, unless EPA notifies you that your deadline is extended. For operators of industrial activities located in the State of Idaho (except Indian country) or on Spokane Tribe of Indians lands that commence discharging between September 30, 2013 and November 10, 2015, you must submit your NOI as soon as possible, but no later than November 10, 2015, unless EPA notifies you that your deadline is extended.

[5] For federal operators of industrial activities located in the State of Washington (except Indian country) that commence discharging after October 19, 2015, or operators seeking coverage for discharges previously covered under an individual permit or an alternative general permit, you must submit your NOI a minimum of 30 days prior to commencing discharge in accordance with the terms of the 2015 MSGP. For operators of industrial activities located in the State of Idaho (except Indian country) or on Spokane Tribe of Indians lands that commence discharging after November 10, 2015, or operators seeking coverage for discharges previously covered under an individual permit or an alternative general permit, you must submit your NOI a minimum of 30 days prior to commencing discharge in accordance with the terms of the 2015 MSGP.

1.2.2 Continuation of Coverage for Existing Permittees After the Permit Expires.

If this permit is not reissued or replaced prior to the expiration date, it will be administratively continued in accordance with the Administrative Procedure Act and 40 CFR 122.6 and remain in force and effect for discharges that were covered prior to expiration. If you obtain authorization to discharge under this permit prior to the expiration date and this permit is administratively continued, any discharges authorized under this permit will automatically remain covered by this permit after its expiration date until the earliest of:

- Your authorization for coverage under a reissued permit or a replacement version of this permit following your timely submittal of a complete and accurate NOI for coverage under the new permit; or

Note: If you fail to submit a timely NOI for coverage under the reissued or replacement permit, your coverage will terminate on the date that the NOI was due.

- Your submittal of a Notice of Termination (NOT); or
- Issuance of an individual permit for the facility's discharges; or
- A formal permit decision by EPA not to reissue this general permit, at which time EPA will identify a reasonable time period for covered dischargers to seek coverage under an alternative general permit or an individual permit. Coverage under this permit will cease at the end of this time period.

EPA reserves the right to modify or revoke and reissue this permit under 40 CFR 122.62 and 63, in which case you will be notified of any relevant changes or procedures to which you may be subject.

1.2.3 Coverage Under Alternative Permits.

EPA may require you to apply for and/or obtain authorization to discharge under an alternative permit, i.e., either an individual NPDES permit or an alternative NPDES general permit, in accordance with 40 CFR 122.64 and 124.5. If EPA requires you to apply for an alternative permit, the Agency will notify you in writing that a permit application or NOI is required. This notification will include a brief statement of the reasons for this decision and will contain alternative permit application or NOI requirements, including deadlines for completing your application or NOI.

1.2.3.1 ***Denial of Coverage for New or Previously Unpermitted Facilities.*** For new or previously unpermitted facilities, following the submittal of your NOI, you may be denied coverage under the 2015 MSGP and must apply for and/or obtain authorization to discharge under an alternative permit, per Part 1.2.3.

1.2.3.2 ***Loss of Authorization Under the 2015 MSGP for Existing Permitted Facilities.*** If your stormwater discharges are covered under this permit, you may receive a written notification that you must either apply for coverage under an individual NPDES permit or submit an NOI for coverage under an alternative general NPDES permit, per Part 1.2.3. In addition to the reasons for the decision and alternative permit application or NOI deadlines, the notice will include a statement that on the effective date of your alternative permit coverage, your coverage under the 2015 MSGP will terminate. EPA may grant additional time to submit the application or NOI if you request it. If you fail to submit an alternative permit application or NOI as required by EPA, then your authorization to discharge under the 2015 MSGP is terminated at the end of the day EPA required you to submit your alternative

permit application or NOI. EPA may take appropriate enforcement action for any unpermitted discharge.

1.2.3.3 ***Operator Requesting Coverage Under an Alternative Permit.*** You may request to be covered under an individual permit. In such a case, you must submit an individual permit application in accordance with the requirements of 40 CFR 122.28(b)(3)(iii), with reasons supporting the request, to the applicable EPA Regional Office listed in Part 7.9.1 of this permit. The request may be granted by issuance of an individual permit if your reasons are adequate to support the request. When you are authorized to discharge under an alternative permit, your authorization to discharge under the 2015 MSGP is terminated on the effective date of the alternative permit.

1.3 Terminating Coverage.

1.3.1 Submitting a Notice of Termination (NOT).

To terminate permit coverage, you must submit a complete and accurate NOT. Your authorization to discharge under this permit terminates at midnight of the day that you are notified that your complete NOT has been processed. If you submit a NOT without meeting one or more of the conditions identified in Part 1.3.3, then your NOT is not valid. You are responsible for meeting the terms of this permit until your authorization is terminated.

1.3.2 How to Submit Your NOT.

You must submit your NOT electronically per Part 7.2, unless you have received a waiver from electronic reporting per Part 7.1, in which case you may use the paper form in Appendix H.

1.3.3 When to Submit Your NOT.

You must submit a NOT within 30 days after one or more of the following conditions have been met:

- A new owner or operator has taken over responsibility for the facility; or
- You have ceased operations at the facility, there are not or no longer will be discharges of stormwater associated with industrial activity from the facility, and you have already implemented necessary sediment and erosion controls per Part 2.1.2.5; or
- You are a Sector G, H, or J facility and you have met the applicable termination requirements; or
- You obtained coverage under an individual or alternative general permit for all discharges required to be covered by an NPDES permit.

1.4 Conditional Exclusion for No Exposure.

If you are covered by this permit, and become eligible for a "no exposure" exclusion from permitting under 40 CFR 122.26(g), you may file a No Exposure Certification. You are no longer required to have a permit upon submission of a complete and accurate No Exposure Certification to EPA. If you are no longer required to have permit coverage because of a no exposure exclusion and have submitted a No Exposure Certification form to EPA, you are not required to submit a NOT. You must submit a No Exposure Certification form to EPA once every five years.

You must submit your No Exposure Certification electronically per Part 7.2, unless you have received a waiver from electronic reporting per Part 7.1, in which case you may use the paper form in Appendix K.

1.5 Permit Compliance.

Any noncompliance with any of the requirements of this permit constitutes a violation of this permit, and thus is a violation of the CWA. As detailed in Part 4 (Corrective Actions) of this permit, failure to take any required corrective actions constitutes an independent, additional violation of this permit, in addition to any original violation that triggered the need for corrective action. As such, any actions and time periods specified for remedying noncompliance do not absolve parties of the initial underlying noncompliance.

Where corrective action is triggered by an event that does not itself constitute permit noncompliance, such as an exceedance of an applicable benchmark, there is no permit violation provided you take the required corrective action within the relevant deadlines established in Part 4.3.

1.6 Severability.

Invalidation of a portion of this permit does not necessarily render the whole permit invalid. EPA's intent is that the permit is to remain in effect to the extent possible; in the event that any part of this permit is invalidated, EPA will advise the regulated community as to the effect of such invalidation.

2. Control Measures and Effluent Limits.

In the technology-based limits included in Parts 2.1 and 8, the term "minimize" means reduce and/or eliminate to the extent achievable using control measures (including best management practices) that are technologically available and economically practicable and achievable in light of best industry practice. The term "infeasible" means not technologically possible or not economically practicable and achievable in light of best industry practices. EPA notes that it does not intend for any permit requirement to conflict with state water rights law.

2.1 Control Measures.

You must select, design, install, and implement control measures (including best management practices) to minimize pollutant discharges that address the selection and design considerations in Part 2.1.1, meet the non-numeric effluent limits in Part 2.1.2, meet limits contained in applicable effluent limitations guidelines in Part 2.1.3, and meet the water quality-based effluent limitations in Part 2.2. The selection, design, installation, and implementation of these control measures must be in accordance with good engineering practices and manufacturer's specifications. Note that you may deviate from such manufacturer's specifications where you provide justification for such deviation and include documentation of your rationale in the part of your SWPPP that describes your control measures, consistent with Part 5.2.4. If you find that your control measures are not achieving their intended effect of minimizing pollutant discharges to meet applicable water quality standards or any of the other non-numeric effluent limits in this permit, you must modify these control measures per the corrective action requirements in Part 4. Regulated stormwater discharges from your facility include stormwater run-on that commingles with stormwater discharges associated with industrial activity at your facility.

Effluent limit requirements in Part 2.1.2 that do not involve the site-specific selection of a control measure or are specific activity requirements (e.g., "Cleaning catch basins when the depth of debris reaches two-thirds (2/3) of the sump depth and keeping the debris surface at least six inches below the lowest outlet pipe") are marked with an asterisk (*). When documenting in your SWPPP, per Part 5, how you will comply with the requirements marked with an asterisk, you have the option of including additional information or you may just "cut-and-paste" those effluent limits verbatim into your SWPPP without providing additional documentation (see Part 5.2.4).

2.1.1 Control Measure Selection and Design Considerations.

You must consider the following when selecting and designing control measures:

- Preventing stormwater from coming into contact with polluting materials is generally more effective, and less costly, than trying to remove pollutants from stormwater;
- Using control measures in combination may be more effective than using control measures in isolation for minimizing pollutants in your stormwater discharge;
- Assessing the type and quantity of pollutants, including their potential to impact receiving water quality, is critical to designing effective control measures that will achieve the limits in this permit;
- Minimizing impervious areas at your facility and infiltrating runoff onsite (including bioretention cells, green roofs, and pervious pavement, among other approaches) can reduce runoff and improve ground water recharge and

stream base flows in local streams, although care must be taken to avoid ground water contamination;

- Attenuating flow using open vegetated swales and natural depressions can reduce in-stream impacts of erosive flows;
- Conserving and/or restoring riparian buffers will help protect streams from stormwater runoff and improve water quality; and
- Using treatment interceptors (e.g., swirl separators and sand filters) may be appropriate in some instances to minimize the discharge of pollutants.

2.1.2 Non-Numeric Technology-Based Effluent Limits (BPT/BAT/BCT).

You must comply with the following non-numeric effluent limits (except where otherwise specified in Part 8) as well as any sector-specific non-numeric effluent limits in Part 8:

2.1.2.1 ***Minimize Exposure.*** You must minimize the exposure of manufacturing, processing, and material storage areas (including loading and unloading, storage, disposal, cleaning, maintenance, and fueling operations) to rain, snow, snowmelt, and runoff in order to minimize pollutant discharges by either locating these industrial materials and activities inside or protecting them with storm resistant coverings. Unless infeasible, you must also:

- Use grading, berming or curbing to prevent runoff of contaminated flows and divert run-on away from these areas;
- Locate materials, equipment, and activities so that potential leaks and spills are contained or able to be contained or diverted before discharge;
- Clean up spills and leaks promptly using dry methods (e.g., absorbents) to prevent the discharge of pollutants;
- Store leaky vehicles and equipment indoors or, if stored outdoors, use drip pans and absorbents;
- Use spill/overflow protection equipment;
- Perform all vehicle and/or equipment cleaning operations indoors, under cover, or in bermed areas that prevent runoff and run-on and also that capture any overspray; and
- Drain fluids from equipment and vehicles that will be decommissioned, and, for any equipment and vehicles that will remain unused for extended periods of time, inspect at least monthly for leaks.

Note: Industrial materials do not need to be enclosed or covered if stormwater runoff from affected areas does not discharge pollutants to receiving waters or if discharges are authorized under another NPDES permit.

2.1.2.2 ***Good Housekeeping.*** You must keep clean all exposed areas that are potential sources of pollutants. You must perform good housekeeping measures in order to minimize pollutant discharges, including but not limited to, the following:

- Sweep or vacuum at regular intervals or, alternatively, wash down the area and collect and/or treat, and properly dispose of the washdown water;
- Store materials in appropriate containers;

- Keep all dumpster lids closed when not in use. For dumpsters and roll off boxes that do not have lids and could leak, ensure that discharges have a control (e.g., secondary containment, treatment). Consistent with Part 1.1.3 above, this permit does not authorize dry weather discharges from dumpsters or roll off boxes;*
- Minimize the potential for waste, garbage and floatable debris to be discharged by keeping exposed areas free of such materials, or by intercepting them before they are discharged.

Plastic Materials Requirements: Facilities that handle pre-production plastic must implement best management practices to eliminate discharges of plastic in stormwater. Examples of plastic material required to be addressed as stormwater pollutants include plastic resin pellets, powders, flakes, additives, regrind, scrap, waste and recycling.

2.1.2.3 ***Maintenance.*** You must maintain all control measures that are used to achieve the effluent limits in this permit in effective operating condition, as well as all industrial equipment and systems, in order to minimize pollutant discharges. This includes:

- Performing inspections and preventive maintenance of stormwater drainage, source controls, treatment systems, and plant equipment and systems that could fail and result in contamination of stormwater.
- Diligently maintaining non-structural control measures (e.g., keep spill response supplies available, personnel appropriately trained).
- Inspecting and maintaining baghouses at least quarterly to prevent the escape of dust from the system and immediately removing any accumulated dust at the base of the exterior baghouse.*
- Cleaning catch basins when the depth of debris reaches two-thirds (2/3) of the sump depth and keeping the debris surface at least six inches below the lowest outlet pipe.*

If you find that your control measures are in need of routine maintenance, you must conduct the necessary maintenance immediately in order to minimize pollutant discharges. If you find that your control measures need to be repaired or replaced, you must immediately take all reasonable steps to prevent or minimize the discharge of pollutants until the final repair or replacement is implemented, including cleaning up any contaminated surfaces so that the material will not be discharged during subsequent storm events. Final repairs/replacement of stormwater controls should be completed as soon as feasible but must be no later than the timeframe established in Part 4.3 for corrective actions, i.e., within 14 days or, if that is infeasible, within 45 days. If the completion of stormwater control repairs/replacement will exceed the 45 day timeframe, you may take the minimum additional time necessary to complete the maintenance, provided that you notify the EPA Regional Office of your intention to exceed 45 days, and document in your SWPPP your rationale for your modified maintenance timeframe. If a control measure was never installed, was installed incorrectly or not in accordance with Parts 2 and/or 8, or is not being properly operated or maintained, you must conduct corrective action as specified in Part 4.

Note: In this context, the term "immediately" requires you to, on the same day you identify that a control measure needs to be maintained, take all reasonable steps

to minimize or prevent the discharge of pollutants until a permanent solution is installed and made operational. However, if a problem is identified at a time in the work day when it is too late to take action, the initiation of action must begin no later than the following work day. "All reasonable steps" means that the permittee has undertaken initial actions to assess and address the condition causing the corrective action, including, for example, cleaning up any exposed materials that may be discharged in a storm event (e.g., through sweeping, vacuuming) or making arrangements (i.e., scheduling) for a new best management practice (BMP) to be installed at a later date. "All reasonable steps" for purposes of complying with Part 4.2 Conditions Requiring SWPPP Review to Determine if Modifications Are Necessary, when you conclude a corrective action is, in fact, not necessary, could include documenting why a corrective action is unnecessary.

2.1.2.4 ***Spill Prevention and Response.*** You must minimize the potential for leaks, spills and other releases that may be exposed to stormwater and develop plans for effective response to such spills if or when they occur in order to minimize pollutant discharges. You must conduct spill prevention and response measures, including but not limited to, the following:

- Plainly label containers (e.g., "Used Oil," "Spent Solvents," "Fertilizers and Pesticides") that could be susceptible to spillage or leakage to encourage proper handling and facilitate rapid response if spills or leaks occur;*
- Implement procedures for material storage and handling, including the use of secondary containment and barriers between material storage and traffic areas, or a similarly effective means designed to prevent the discharge of pollutants from these areas;
- Develop training on the procedures for expeditiously stopping, containing, and cleaning up leaks, spills, and other releases. As appropriate, execute such procedures as soon as possible;
- Keep spill kits on-site, located near areas where spills may occur or where a rapid response can be made; and
- Notify appropriate facility personnel when a leak, spill, or other release occurs.

Where a leak, spill or other release containing a hazardous substance or oil in an amount equal to or in excess of a reportable quantity established under either 40 CFR Part 110, 40 CFR Part 117, or 40 CFR Part 302, occurs during a 24-hour period, you must notify the National Response Center (NRC) at (800) 424-8802 or, in the Washington, DC, metropolitan area, call (202) 267-2675 in accordance with the requirements of 40 CFR Part 110, 40 CFR Part 117, and 40 CFR Part 302 as soon as you have knowledge of the discharge. State or local requirements may necessitate reporting spills or discharges to local emergency response, public health, or drinking water supply agencies. Contact information must be in locations that are readily accessible and available.

2.1.2.5 ***Erosion and Sediment Controls.*** You must minimize erosion by stabilizing exposed soils at your facility in order to minimize pollutant discharges and placing flow velocity dissipation devices at discharge locations to minimize channel and streambank erosion and scour in the immediate vicinity of discharge points. You must also use structural and non-structural control measures to minimize the discharge of sediment. If you use polymers and/or other chemical treatments as part of your controls, you must identify the polymers and/or chemicals used and

the purpose in your SWPPP. There are many resources available to help you select appropriate BMPs for erosion and sediment control, including EPA's Stormwater Discharges from Construction Activities website at: http://water.epa.gov/polwaste/npdes/stormwater/EPA-Construction-General-Permit.cfm.

2.1.2.6 ***Management of Runoff.*** You must divert, infiltrate, reuse, contain, or otherwise reduce stormwater runoff to minimize pollutants in your discharges. In selecting, designing, installing, and implementing appropriate control measures, you are encouraged to consult with EPA's Internet-based resources relating to runoff management, including the sector-specific *Industrial Stormwater Fact Sheet Series*, (http://water.epa.gov/polwaste/npdes/stormwater/EPA-Multi-Sector-General-Permit-MSGP.cfm), *National Menu of Stormwater BMPs* (http://water.epa.gov/polwaste/npdes/swbmp/index.cfm), and *National Management Measures to Control Nonpoint Source Pollution from Urban Areas* (http://water.epa.gov/polwaste/nps/urban/), and any similar state or tribal resources.

2.1.2.7 ***Salt Storage Piles or Piles Containing Salt.*** You must enclose or cover storage piles of salt, or piles containing salt, used for deicing or other commercial or industrial purposes, including maintenance of paved surfaces, in order to minimize pollutant discharges. You must implement appropriate measures (e.g., good housekeeping, diversions, containment) to minimize exposure resulting from adding to or removing materials from the pile. Piles do not need to be enclosed or covered pursuant to this permit if stormwater runoff from the piles is not discharged or if discharges from the piles are authorized under another NPDES permit.

2.1.2.8 ***Employee Training.*** You must train all employees who work in areas where industrial materials or activities are exposed to stormwater, or who are responsible for implementing activities necessary to meet the conditions of this permit (e.g., inspectors, maintenance personnel), including all members of your stormwater pollution prevention team. You must ensure the following personnel understand the requirements of this permit and their specific responsibilities with respect to those requirements:

- Personnel who are responsible for the design, installation, maintenance, and/or repair of controls (including pollution prevention measures);
- Personnel responsible for the storage and handling of chemicals and materials that could become contaminants in stormwater discharges;
- Personnel who are responsible for conducting and documenting monitoring and inspections as required in Parts 3 and 6; and
- Personnel who are responsible for taking and documenting corrective actions as required in Part 4.

Personnel must be trained in at least the following if related to the scope of their job duties (e.g., only personnel responsible for conducting inspections need to understand how to conduct inspections):

- An overview of what is in the SWPPP;
- Spill response procedures, good housekeeping, maintenance requirements, and material management practices;

- The location of all controls on the site required by this permit, and how they are to be maintained;
- The proper procedures to follow with respect to the permit's pollution prevention requirements; and
- When and how to conduct inspections, record applicable findings, and take corrective actions.

2.1.2.9 ***Non-Stormwater Discharges.*** You must evaluate for the presence of non-stormwater discharges. Any non-stormwater discharges not explicitly authorized in Part 1.1.3 or covered by another NPDES permit must be eliminated. This includes vehicle and equipment/tank wash water (except for those authorized in Part 1.1.3.3 for Sectors G, H, and J). If not covered under a separate NPDES permit, wastewater, wash water and any other unauthorized non-stormwater must be discharged to a sanitary sewer in accordance with applicable industrial pretreatment requirements, or otherwise disposed of appropriately.

2.1.2.10 ***Dust Generation and Vehicle Tracking of Industrial Materials.*** You must minimize generation of dust and off-site tracking of raw, final, or waste materials in order to minimize pollutant discharges.

2.1.3 Numeric Effluent Limitations Based on Effluent Limitations Guidelines.

If you are in an industrial category subject to one of the effluent limitations guidelines identified in Table 6-1 (see Part 6.2.2.1), you must meet the effluent limits referenced in Table 2-1 below:

Table 2-1. Applicable Effluent Limitations Guidelines

Regulated Activity	40 CFR Part/Subpart	Effluent Limit
Discharges resulting from spray down or intentional wetting of logs at wet deck storage areas	Part 429, Subpart I	See Part 8.A.7
Runoff from phosphate fertilizer manufacturing facilities that comes into contact with any raw materials, finished product, by-products or waste products (SIC 2874)	Part 418, Subpart A	See Part 8.C.4
Runoff from asphalt emulsion facilities	Part 443, Subpart A	See Part 8.D.4
Runoff from material storage piles at cement manufacturing facilities	Part 411, Subpart C	See Part 8.E.5
Mine dewatering discharges at crushed stone, construction sand and gravel, or industrial sand mining facilities	Part 436, Subparts B, C, or D	See Part 8.J.9
Runoff from hazardous waste landfills	Part 445, Subpart A	See Part 8.K.6
Runoff from non-hazardous waste landfills	Part 445, Subpart B	See Part 8.L.10
Runoff from coal storage piles at steam electric generating facilities	Part 423	See Part 8.O.8
Runoff containing urea from airfield pavement deicing at existing and new primary airports with 1,000 or more annual non-propeller aircraft departures	Part 449	See Part 8.S.8

2.2 Water Quality-Based Effluent Limitations.

2.2.1 Water Quality Standards.

Your discharge must be controlled as necessary to meet applicable water quality standards of all affected states (i.e., your discharge must not cause or contribute to an exceedance of applicable water quality standards in any affected state).

EPA expects that compliance with the conditions in this permit will control discharges as necessary to meet applicable water quality standards. If at any time you become aware, or EPA determines, that your discharge does not meet applicable water quality standards, you must take corrective action(s) as required in Part 4.1 and document the corrective actions as required in Part 4.4. You must also comply with any additional requirements that your state or tribe requires in Part 9.

EPA may also require that you undertake additional control measures (to meet the narrative water quality-based effluent limit above) on a site-specific basis, or require you to obtain coverage under an individual permit, if information in your NOI, required reports, or from other sources indicates that your discharges are not controlled as necessary to meet applicable water quality standards. You must implement all measures necessary to be consistent with an available wasteload allocation in an EPA-established or approved TMDL.

2.2.2 Discharges to Water Quality-Impaired Waters.

You are considered to discharge to an impaired water if the first water of the U.S. to which you discharge is identified by a state, tribe or EPA as not meeting an applicable water quality standard, and:

- Requires development of a TMDL (pursuant to section 303(d) of the CWA);
- Is addressed by an EPA-approved or established TMDL; or
- Is not in either of the above categories but the waterbody is covered by a pollution control program that meets the requirements of 40 CFR 130.7(b)(1).

Note: For discharges that enter a separate storm sewer system[3] prior to discharge, the first water of the U.S. to which you discharge is the waterbody that receives the water from the storm sewer system.

2.2.2.1 Existing Discharge to an Impaired Water with an EPA-Approved or Established TMDL. If you discharge to an impaired water with an EPA-approved or established TMDL, EPA will inform you whether any additional measures are necessary for your discharge to be consistent with the assumptions and requirements of the applicable TMDL and its wasteload allocation, or if coverage under an individual permit is necessary per Part 1.2.3.

2.2.2.2 Existing Discharger to an Impaired Water without an EPA-Approved or Established TMDL. If you discharge to an impaired water without an EPA-approved or established TMDL, you are still required to comply with Part 2.2.1, and you must comply with the monitoring requirements of Part 6.2.4.1. Note that the impaired waters monitoring requirements of Part 6.2.4.1 also apply where EPA determines that your discharge is not controlled as necessary to meet applicable water quality

3 Separate storm systems do not include combined sewer systems or sanitary sewer systems. Separate storm systems include both municipal storm sewer systems (MS4s) and non-municipal separate storm sewers.

standards in an impaired downstream water segment, even if your discharge is to a receiving water that is not identified as impaired according to Part 2.2.2.

2.2.2.3 ***New Discharger or New Source to an Impaired Water.*** If your authorization to discharge under this permit relied on Part 1.1.4.8 for a new discharger or a new source to an impaired water, you must implement and maintain any measures that enabled you to become eligible under Part 1.1.4.8, and modify such measures as necessary pursuant to any Part 4 corrective actions. You also must comply with Part 2.2.1 and the monitoring requirements of Parts 6.2.4.1.

2.2.3 Tier 2 Antidegradation Requirements for New Dischargers, New Sources, or Increased Discharges.

If you are a new discharger or a new source (as defined in Appendix A), or an existing discharger required to notify EPA of an increased discharge consistent with Part 7.7 (i.e., a "planned changes" report), and you discharge directly to waters designated by a state or tribe as Tier 2 or Tier 2.5 for antidegradation purposes under 40 CFR 131.12(a), EPA may require that you undertake additional control measures as necessary to ensure compliance with the applicable antidegradation requirements, or notify you that an individual permit application is necessary in accordance with Part 1.2.3. See list of Tier 2 and 2.5 waters in Appendix L.

2.3 Requirements Relating to Endangered Species, Historic Properties, and Federal CERCLA Sites.

If your eligibility under either Part 1.1.4.5, Part 1.1.4.6, and/or Part 1.1.4.10 was made possible through your, or another operator's, agreement to undertake additional measures, you must comply with all such measures to maintain eligibility under the MSGP.

Note that if at any time you become aware, or EPA determines, that your discharges and/or discharge-related activities have the potential to adversely affect listed species and/or critical habitat, EPA may inform you of the need to implement additional measures on a site-specific basis to meet the effluent limits in this permit, or require you to obtain coverage under an individual permit.

3. Inspections.

3.1 Routine Facility Inspections.

During normal facility operating hours you must conduct inspections of areas of the facility covered by the requirements in this permit, including, but not limited to, the following:

- Areas where industrial materials or activities are exposed to stormwater;
- Areas identified in the SWPPP and those that are potential pollutant sources (see Part 5.2.3);
- Areas where spills and leaks have occurred in the past three years;
- Discharge points; and
- Control measures used to comply with the effluent limits contained in this permit.

Inspections must be conducted at least quarterly (i.e., once each calendar quarter), or in some instances more frequently (e.g., monthly). Increased frequency may be appropriate for some types of equipment, processes and stormwater control measures, or areas of the facility with significant activities and materials exposed to stormwater. At least once each calendar year, the routine inspection must be conducted during a period when a stormwater discharge is occurring.

Inspections must be performed by qualified personnel (as defined in Appendix A) with at least one member of your stormwater pollution prevention team participating. Inspectors must consider the results of visual and analytical monitoring (if any) for the past year when planning and conducting inspections.

During the inspection you must examine or look out for the following:

- Industrial materials, residue or trash that may have or could come into contact with stormwater;
- Leaks or spills from industrial equipment, drums, tanks and other containers;
- Offsite tracking of industrial or waste materials, or sediment where vehicles enter or exit the site;
- Tracking or blowing of raw, final or waste materials from areas of no exposure to exposed areas;
- Control measures needing replacement, maintenance or repair.

During an inspection occurring during a stormwater event or discharge, control measures implemented to comply with effluent limits must be observed to ensure they are functioning correctly. Discharge points, as defined in Appendix A, must also be observed during this inspection. If such discharge locations are inaccessible, nearby downstream locations must be inspected.

3.1.1 Exceptions to Routine Facility Inspections for Inactive and Unstaffed Sites.

The requirement to conduct facility inspections on a routine basis does not apply at a facility that is inactive and unstaffed, as long as there are no industrial materials or activities exposed to stormwater. Such a facility is only required to conduct an annual site inspection in accordance with Part 3.1. To invoke this exception, you must indicate that your facility is inactive and unstaffed on your NOI. If you are already covered under the permit and your

facility has changed from active to inactive and unstaffed, you must modify and re-certify your NOI. You must also include a statement in your SWPPP per Part 5.2.5.2 indicating that the site is inactive and unstaffed, and that there are no industrial materials or activities exposed to stormwater, in accordance with the substantive requirements in 40 CFR 122.26(g)(4)(iii). The statement must be signed and certified in accordance with Appendix B, Subsection 11. If circumstances change and industrial materials or activities become exposed to stormwater or your facility becomes active and/or staffed, this exception no longer applies and you must immediately resume routine facility inspections. If you are not qualified for this exception at the time you become authorized under this permit, but during the permit term you become qualified because your facility becomes inactive and unstaffed, and there are no industrial materials or activities that are exposed to stormwater, you must include the same signed and certified statement as above and retain it with your records pursuant to Part 5.5.

Inactive and unstaffed facilities covered under Sectors G (Metal Mining), H (Coal Mines and Coal Mining-Related Facilities), and J (Non-Metallic Mineral Mining and Dressing) are not required to meet the "no industrial materials or activities exposed to stormwater" standard to be eligible for this exception from routine inspections, per Parts 8.G.8.4, 8.H.8.1, and 8.J.8.1.

3.1.2 Routine Facility Inspection Documentation.

You must document the findings of your facility inspections and maintain this report with your SWPPP as required in Part 5.5. Do not submit your routine facility inspection report to EPA, unless specifically requested to do so. However, you must summarize your findings in the annual report per Part 7.5. Document all findings, including but not limited to, the following information:

- The inspection date and time;
- The name(s) and signature(s) of the inspector(s);
- Weather information;
- All observations relating to the implementation of control measures at the facility, including:
  - A description of any discharges occurring at the time of the inspection;
  - Any previously unidentified discharges from and/or pollutants at the site;
  - Any evidence of, or the potential for, pollutants entering the drainage system;
  - Observations regarding the physical condition of and around all outfalls, including any flow dissipation devices, and evidence of pollutants in discharges and/or the receiving water;
  - Any control measures needing maintenance, repairs, or replacement;
- Any additional control measures needed to comply with the permit requirements;
- Any incidents of noncompliance; and
- A statement, signed and certified in accordance with Appendix B, Subsection 11.

Any corrective action required as a result of a routine facility inspection must be performed consistent with Part 4 of this permit.

If you performed a discharge visual assessment required in Part 3.2 during your facility inspection, you may include the results of the assessment with the report required in Part 3.1.2, as long as all components of both types of inspections are included in the report.

3.2 Quarterly Visual Assessment of Stormwater Discharges.

3.2.1 Quarterly Visual Assessment Procedures.

Once each quarter for the entire permit term, you must collect a stormwater sample from each outfall (except as noted in Part 3.2.3) and conduct a visual assessment of each of these samples. These samples are not required to be collected consistent with 40 CFR Part 136 procedures but must be collected in such a manner that the samples are representative of the stormwater discharge. Guidance on monitoring is available at http://water.epa.gov/polwaste/npdes/stormwater/EPA-Multi-Sector-General-Permit-MSGP.cfm.

The visual assessment must be made:

- Of a sample in a clean, colorless glass or plastic container, and examined in a well-lit area;
- On samples collected within the first 30 minutes of an actual discharge from a storm event. If it is not possible to collect the sample within the first 30 minutes of discharge, the sample must be collected as soon as practicable after the first 30 minutes and you must document why it was not possible to take the sample within the first 30 minutes. In the case of snowmelt, samples must be taken during a period with a measurable discharge from your site; and
- For storm events, on discharges that occur at least 72 hours (three days) from the previous discharge. The 72-hour (three-day) storm interval does not apply if you document that less than a 72-hour (three-day) interval is representative for local storm events during the sampling period.

You must visually inspect or observe the sample for the following water quality characteristics:

- Color;
- Odor;
- Clarity (diminished);
- Floating solids;
- Settled solids;
- Suspended solids;
- Foam;
- Oil sheen; and
- Other obvious indicators of stormwater pollution.

Whenever the visual assessment shows evidence of stormwater pollution, you must initiate the corrective action procedures in Part 4.

3.2.2 Quarterly Visual Assessment Documentation.

You must document the results of your visual assessments and maintain this documentation onsite with your SWPPP as required in Part 5.5. You are not required to submit

your visual assessment findings to EPA, unless specifically requested to do so. However, you must summarize your findings in the annual report per Part 7.5. Your documentation of the visual assessment must include, but not be limited to:

- Sample location(s);
- Sample collection date and time, and visual assessment date and time for each sample;
- Personnel collecting the sample and performing visual assessment, and their signatures;
- Nature of the discharge (i.e., runoff or snowmelt);
- Results of observations of the stormwater discharge;
- Probable sources of any observed stormwater contamination;
- If applicable, why it was not possible to take samples within the first 30 minutes; and
- A statement, signed and certified in accordance with Appendix B, Subsection 11.

Any corrective action required as a result of a quarterly visual assessment must be performed consistent with Part 4 of this permit.

3.2.3 Exceptions to Quarterly Visual Assessments.

Adverse Weather Conditions: When adverse weather conditions prevent the collection of samples during the quarter, you must take a substitute sample during the next qualifying storm event. Documentation of the rationale for no visual assessment for the quarter must be included with your SWPPP records as described in Part 5.5. Adverse conditions are those that are dangerous or create inaccessibility for personnel, such as local flooding, high winds, electrical storms, or situations that otherwise make sampling impractical, such as extended frozen conditions.

Climates with Irregular Stormwater Runoff: If your facility is located in an area where limited rainfall occurs during many parts of the year (e.g., arid or semi-arid climate) or in an area where freezing conditions exist that prevent runoff from occurring for extended periods, then your samples for the quarterly visual assessments may be distributed during seasons when precipitation runoff occurs.

Areas Subject to Snow: In areas subject to snow, at least one quarterly visual assessment must capture snowmelt discharge, as described in Part 6.1.3, taking into account the exception described above for climates with irregular stormwater runoff.

Inactive and Unstaffed Sites: The requirement for a quarterly visual assessment does not apply at a facility that is inactive and unstaffed, as long as there are no industrial materials or activities exposed to stormwater. To invoke this exception, you must maintain a statement in your SWPPP per Part 5.2.5.2 indicating that the site is inactive and unstaffed, and that there are no industrial materials or activities exposed to precipitation, in accordance with the substantive requirements in 40 CFR 122.26(g)(4)(iii). The statement must be signed and certified in accordance with Appendix B, Subsection 11. If circumstances change and industrial materials or activities become exposed to stormwater or your facility becomes active and/or staffed, this exception no longer applies and you must immediately resume quarterly visual assessments. If you are not qualified for this exception at the time you are authorized under this

permit, but during the permit term you become qualified because your facility becomes inactive and unstaffed, and there are no industrial materials or activities that are exposed to stormwater, then you must include the same signed and certified statement as above and retain it with your records pursuant to Part 5.5.

Inactive and unstaffed facilities covered under Sectors G (Metal Mining), H (Coal Mines and Coal Mining-Related Facilities), and J (Non-Metallic Mineral Mining and Dressing), are not required to meet the "no industrial materials or activities exposed to stormwater" standard to be eligible for this exception from quarterly visual assessments, consistent with the requirements established in Parts 8.G.8.4, 8.H.8.1, and 8.J.8.1.

Substantially Identical Outfalls: If your facility has two or more outfalls that discharge substantially identical effluents, as documented in Part 5.2.5.3, you may conduct quarterly visual assessments of the discharge at just one of the outfalls and report that the results also apply to the substantially identical outfall(s) provided that you perform visual assessments on a rotating basis of each substantially identical outfall throughout the period of your coverage under this permit.

If stormwater contamination is identified through visual assessment performed at a substantially identical outfall, you must assess and modify your control measures as appropriate for each outfall represented by the monitored outfall.

4. Corrective Actions.

4.1 Conditions Requiring SWPPP Review and Revision to Ensure Effluent Limits are Met.

When any of the following conditions occur or are detected during an inspection, monitoring or other means, or EPA or the operator of the MS4 through which you discharge informs you that any of the following conditions have occurred, you must review and revise, as appropriate, your SWPPP (e.g., sources of pollution; spill and leak procedures; non-stormwater discharges; the selection, design, installation and implementation of your control measures) so that this permit's effluent limits are met and pollutant discharges are minimized:

- An unauthorized release or discharge (e.g., spill, leak, or discharge of non-stormwater not authorized by this or another NPDES permit to a water of the U.S.) occurs at your facility.
- A discharge violates a numeric effluent limit listed in Table 2-1 and in your Part 8 sector-specific requirements.
- Your control measures are not stringent enough for the discharge to meet applicable water quality standards or the non-numeric effluent limits in this permit.
- A required control measure was never installed, was installed incorrectly, or not in accordance with Parts 2 and/or 8, or is not being properly operated or maintained.
- Whenever a visual assessment shows evidence of stormwater pollution (e.g., color, odor, floating solids, settled solids, suspended solids, foam).

4.2 Conditions Requiring SWPPP Review to Determine if Modifications Are Necessary.

If any of the following conditions occur, you must review your SWPPP (e.g., sources of pollution, spill and leak procedures, non-stormwater discharges, selection, design, installation and implementation of your control measures) to determine if modifications are necessary to meet the effluent limits in this permit:

- Construction or a change in design, operation, or maintenance at your facility that significantly changes the nature of pollutants discharged in stormwater from your facility, or significantly increases the quantity of pollutants discharged.
- The average of four quarterly sampling results exceeds an applicable benchmark (see Part 6.2.1.2). If less than four benchmark samples have been taken, but the results are such that an exceedance of the four quarter average is mathematically certain (i.e., if the sum of quarterly sample results to date is more than four times the benchmark level) this is considered a benchmark exceedance, triggering this review.

Note: A benchmark exceedance does not trigger a corrective action if you determine that the exceedance is solely attributable to natural background sources, or if you make a finding that no further pollutant reductions are technologically available and economically practicable and achievable in light of best industry practice (see Part 6.2.1.2).

Note: When run-on to your facility causes a benchmark exceedance, in addition to reviewing and revising, as appropriate, your SWPPP, you should notify the other operators contributing run-on to your discharges to abate their pollutant contribution. Where the other operators fail to take action to address the stormwater run-on, you should contact your EPA Regional Office.

4.3 Corrective Actions and Deadlines.

4.3.1 Immediate Actions.

If corrective action is needed, you must immediately take all reasonable steps necessary to minimize or prevent the discharge of pollutants until a permanent solution is installed and made operational, including cleaning up any contaminated surfaces so that the material will not discharge in subsequent storm events.

Note: In this context, the term "immediately" requires you to, on the same day a condition requiring corrective action is found, take all reasonable steps to minimize or prevent the discharge of pollutants until a permanent solution is installed and made operational. However, if a problem is identified at a time in the work day when it is too late to initiate corrective action, the initiation of corrective action must begin no later than the following work day. "All reasonable steps" means that the permittee has undertaken initial actions to assess and address the condition causing the corrective action, including, for example, cleaning up any exposed materials that may be discharged in a storm event (e.g., through sweeping, vacuuming) or making arrangements (i.e., scheduling) for a new BMP to be installed at a later date. "All reasonable steps" for purposes of complying with Part 4.2 Conditions Requiring SWPPP Review to Determine if Modifications Are Necessary, when you conclude a corrective action is, in fact, not necessary, could include documenting why a corrective action is unnecessary.

4.3.2 Subsequent Actions.

If you determine that additional actions are necessary beyond those implemented pursuant to Part 4.3.1, you must complete the corrective actions (e.g., install a new or modified control and make it operational, complete the repair) before the next storm event if possible, and within 14 calendar days from the time of discovery of the corrective action condition. If it is infeasible to complete the corrective action within 14 calendar days, you must document why it is infeasible to complete the corrective action within the 14-day timeframe. You must also identify your schedule for completing the work, which must be done as soon as practicable after the 14-day timeframe but no longer than 45 days after discovery. If the completion of corrective action will exceed the 45 day timeframe, you may take the minimum additional time necessary to complete the corrective action, provided that you notify the EPA Regional Office of your intention to exceed 45 days, your rationale for an extension, and a completion date, which you must also include in your corrective action documentation (see Part 4.4). Where your corrective actions result in changes to any of the controls or procedures documented in your SWPPP, you must modify your SWPPP accordingly within 14 calendar days of completing corrective action work.

These time intervals are not grace periods, but are schedules considered reasonable for documenting your findings and for making repairs and improvements. They are included in this permit to ensure that the conditions prompting the need for these repairs and improvements do not persist indefinitely.

4.4 Corrective Action Documentation.

You must document the existence of any of the conditions listed in Parts 4.1 or 4.2 within 24 hours of becoming aware of such condition. You are not required to submit your corrective action documentation to EPA, unless specifically requested to do so. However, you must summarize your findings in the annual report per Part 7.5. Include the following information in your documentation:

- Description of the condition triggering the need for corrective action review. For any spills or leaks, include the following information: a description of the

incident including material, date/time, amount, location, and reason for spill, and any leaks, spills or other releases that resulted in discharges of pollutants to waters of U.S., through stormwater or otherwise;

- Date the condition was identified;
- Description of immediate actions taken pursuant to Part 4.3.1 to minimize or prevent the discharge of pollutants. For any spills or leaks, include response actions, the date/time clean-up completed, notifications made, and staff involved. Also include any measures taken to prevent the reoccurrence of such releases (see Part 2.1.2.4); and
- A statement, signed and certified in accordance with Appendix B, Subsection 11.

You must also document the corrective actions taken or to be taken as a result of the conditions listed in Part 4.1 or 4.2 (or, for triggering events in Part 4.2 where you determine that corrective action is not necessary, the basis for this determination) within 14 days from the time of discovery of any of those conditions. Provide the dates when each corrective action was initiated and completed (or is expected to be completed). If applicable, document why it is infeasible to complete the necessary installations or repairs within the 14-day timeframe and document your schedule for installing the controls and making them operational as soon as practicable after the 14-day timeframe. If you notified EPA regarding an extension of the 45 day timeframe, you must document your rationale for an extension.

4.5 Effect of Corrective Action.

If the event triggering the review is a permit violation (e.g., non-compliance with an effluent limit), correcting it does not remove the original violation. Additionally, failing to take corrective action in accordance with this section is an additional permit violation. EPA will consider the appropriateness and promptness of corrective action in determining enforcement responses to permit violations.

4.6 Substantially Identical Outfalls.

If the event triggering corrective action is associated with an outfall that had been identified as a "substantially identical outfall" (see Parts 3.2.3 and 6.1.1), your review must assess the need for corrective action for all related substantially identical outfalls. Any necessary changes to control measures that affect these other outfalls must also be made before the next storm event if possible, or as soon as practicable following that storm event. Any corrective actions must be conducted within the timeframes set forth in Part 4.3.

5. Stormwater Pollution Prevention Plan (SWPPP).

You must prepare a SWPPP for your facility before submitting your NOI for permit coverage. If you prepared a SWPPP for coverage under a previous version of this NPDES permit, you must review and update the SWPPP to implement all provisions of this permit prior to submitting your NOI. The SWPPP does not contain effluent limitations; such limitations are contained in Parts 2, 8, and 9 of the permit. The SWPPP is intended to document the selection, design, and installation of control measures to meet the permit's effluent limits. As distinct from the SWPPP, the additional documentation requirements (see Part 5.5) are intended to document the implementation (including inspection, maintenance, monitoring, and corrective action) of the permit requirements.

Note: Any discharges not expressly authorized in this permit cannot become authorized or shielded from liability under CWA section 402(k) by disclosure to EPA, state, or local authorities after issuance of this permit via any means, including the Notice of Intent (NOI) to be covered by the permit, the SWPPP, during an inspection, etc.

5.1 Person(s) Responsible for SWPPP Preparation.

The SWPPP shall be prepared in accordance with good engineering practices and to industry standards. The SWPPP may be developed by either a person on your staff or a third party you hire, but it must be developed by a "qualified person" and must be certified per the signature requirements in Part 5.2.7. If EPA concludes that the SWPPP is not in compliance with Part 5.2 of this permit, EPA may require the SWPPP to be reviewed, amended as necessary, and certified by a Professional Engineer, or for Sector G, H or J, by a Professional Geologist, with the education and experience necessary to prepare an adequate SWPPP.

Note: A "qualified person" is a person knowledgeable in the principles and practices of industrial stormwater controls and pollution prevention, and possesses the education and ability to assess conditions at the industrial facility that could impact stormwater quality, and the education and ability to assess the effectiveness of stormwater controls selected and installed to meet the requirements of the permit.

5.2 Contents of Your SWPPP.

For coverage under this permit, your SWPPP must contain all of the following elements:

- Stormwater pollution prevention team (see Part 5.2.1);
- Site description (see Part 5.2.2);
- Summary of potential pollutant sources (see Part 5.2.3);
- Description of control measures (see Part 5.2.4);
- Schedules and procedures (see Part 5.2.5);
- Documentation to support eligibility considerations under other federal laws (see Part 5.2.6); and
- Signature requirements (see Part 5.2.7).

Where your SWPPP refers to procedures in other facility documents, such as a Spill Prevention, Control and Countermeasure (SPCC) Plan or an Environmental Management System (EMS), copies of the relevant portions of those documents must be kept with your SWPPP.

5.2.1 Stormwater Pollution Prevention Team.

You must identify the staff members (by name or title) that comprise the facility's stormwater pollution prevention team as well as their individual responsibilities. Your stormwater pollution prevention team is responsible for overseeing development of the SWPPP, any modifications to it, and for implementing and maintaining control measures and taking corrective actions when required. Each member of the stormwater pollution prevention team must have ready access to either an electronic or paper copy of applicable portions of this permit, the most updated copy of your SWPPP, and other relevant documents or information that must be kept with the SWPPP.

5.2.2 Site Description.

Your SWPPP must include the following:

- *Activities at the Facility*. Provide a description of the nature of the industrial activities at your facility.
- *General location map*. Provide a general location map (e.g., U.S. Geological Survey (USGS) quadrangle map) with enough detail to identify the location of your facility and all receiving waters for your stormwater discharges.
- *Site map*. Provide a map showing:
  - Boundaries of the property and the size of the property in acres;
  - Location and extent of significant structures and impervious surfaces;
  - Directions of stormwater flow (use arrows);
  - Locations of all stormwater control measures;
  - Locations of all receiving waters, including wetlands, in the immediate vicinity of your facility. Indicate which waterbodies are listed as impaired and which are identified by your state, tribe, or EPA as Tier 2, Tier 2.5, or Tier 3 waters;
  - Locations of all stormwater conveyances including ditches, pipes, and swales;
  - Locations of potential pollutant sources identified under Part 5.2.3.2;
  - Locations where significant spills or leaks identified under Part 5.2.3.3 have occurred;
  - Locations of all stormwater monitoring points;
  - Locations of stormwater inlets and outfalls, with a unique identification code for each outfall (e.g., Outfall 001, 002), indicating if you are treating one or more outfalls as "substantially identical" under Parts 3.2.3, 5.2.5.3, and 6.1.1, and an approximate outline of the areas draining to each outfall;
  - If applicable, MS4s and where your stormwater discharges to them;
  - Areas of designated critical habitat for endangered or threatened species, if applicable.
  - Locations of the following activities where such activities are exposed to precipitation:
    - fueling stations;
    - vehicle and equipment maintenance and/or cleaning areas;
    - loading/unloading areas;
    - locations used for the treatment, storage, or disposal of wastes;
    - liquid storage tanks;

- processing and storage areas;
- immediate access roads and rail lines used or traveled by carriers of raw materials, manufactured products, waste material, or by-products used or created by the facility;
- transfer areas for substances in bulk;
- machinery;
- locations and sources of run-on to your site from adjacent property that contains significant quantities of pollutants.

5.2.3 Summary of Potential Pollutant Sources.

You must describe areas at your facility where industrial materials or activities are exposed to stormwater or from which allowable non-stormwater discharges originate. Industrial materials or activities include, but are not limited to: material handling equipment or activities; industrial machinery; raw materials; industrial production and processes; and intermediate products, by-products, final products, and waste products. Material handling activities include, but are not limited to: the storage, loading and unloading, transportation, disposal, or conveyance of any raw material, intermediate product, final product or waste product. For structures located in areas of industrial activity, you must be aware that the structures themselves are potential sources of pollutants. This could occur, for example, when metals such as aluminum or copper are leached from the structures as a result of acid rain.

For each area identified, the description must include:

5.2.3.1 ***Activities in the Area.*** A list of the industrial activities exposed to stormwater (e.g., material storage; equipment fueling, maintenance, and cleaning; cutting steel beams).

5.2.3.2 ***Pollutants.*** A list of the pollutant(s) or pollutant constituents (e.g., crankcase oil, zinc, sulfuric acid, cleaning solvents) associated with each identified activity, which could be exposed to rainfall or snowmelt and could be discharged from your facility. The pollutant list must include all significant materials that have been handled, treated, stored or disposed, and that have been exposed to stormwater in the three years prior to the date you prepare or amend your SWPPP.

5.2.3.3 ***Spills and Leaks.*** You must document where potential spills and leaks could occur that could contribute pollutants to stormwater discharges, and the corresponding outfall(s) that would be affected by such spills and leaks. You must document all significant spills and leaks of oil or toxic or hazardous substances that actually occurred at exposed areas, or that drained to a stormwater conveyance, in the three years prior to the date you prepare or amend your SWPPP.

Note: Significant spills and leaks include, but are not limited to, releases of oil or hazardous substances in excess of quantities that are reportable under CWA section 311 (see 40 CFR 110.6 and 40 CFR 117.21) or section 102 of the Comprehensive Environmental Response, Compensation and Liability Act (CERCLA), 42 USC §9602. This permit does not relieve you of the reporting requirements of 40 CFR 110, 40 CFR 117, and 40 CFR 302 relating to spills or other releases of oils or hazardous substances.

5.2.3.4 ***Unauthorized Non-Stormwater Discharges.*** You must document that you have evaluated for the presence of unauthorized non-stormwater discharges (see Part

1.1.3 for the exclusive list of authorized non-stormwater discharges under this permit).

Documentation of your evaluation must include:

- The date of the evaluation;
- A description of the evaluation criteria used;
- A list of the outfalls or onsite drainage points that were directly observed during the evaluation; and
- The action(s) taken, such as a list of control measures used to eliminate unauthorized discharge(s), or documentation that a separate NPDES permit was obtained. For example, a floor drain was sealed, a sink drain was re-routed to sanitary, or an NPDES permit application was submitted for an unauthorized cooling water discharge.

5.2.3.5 ***Salt Storage.*** You must document the location of any storage piles containing salt used for deicing or other commercial or industrial purposes.

5.2.3.6 ***Sampling Data.*** Existing dischargers must summarize all stormwater discharge sampling data collected at the facility during the previous permit term. The summary shall include a narrative description (and may include data tables/figures) that adequately summarizes the collected sampling data to support identification of potential pollution sources at your facility. New dischargers and new sources must provide a summary of any available stormwater runoff data they may have.

5.2.4 Description of Control Measures to Meet Technology-Based and Water Quality-Based Effluent Limits.

You must document the location and type of control measures you have specifically chosen and/or designed to comply with:

- Non-numeric technology-based effluent limits in Part 2.1.2;
- Applicable numeric effluent limitations guidelines-based limits in Part 2.1.3 and Part 8;
- Water quality-based effluent limits in Part 2.2;
- Any additional measures that formed the basis of eligibility regarding threatened and endangered species, historic properties, and/or federal CERCLA Site requirements in Part 2.3;
- Applicable effluent limits in Parts 8 and 9.
- Regarding your control measures, you must also document, as appropriate:
  - How you addressed the selection and design considerations in Part 2.1.1;
  - How they address the pollutant sources identified in Part 5.2.3.

Effluent limit requirements in Part 2.1.2 that do not involve the site-specific selection of a control measure or are specific activity requirements (e.g., "cleaning catch basins when the depth of debris reaches two-thirds (2/3) of the sump depth and keeping the debris surface at least six inches below the lowest outlet pipe") are marked with an asterisk (*). For the requirements marked with an asterisk, you may include extra information, or you may just "cut-

and-paste" these effluent limits verbatim into your SWPPP without providing additional documentation.

5.2.5 Schedules and Procedures.

5.2.5.1 Pertaining to Control Measures Used to Comply with the Effluent Limits in Part 2. The following must be documented in your SWPPP:

- Good Housekeeping (See Part 2.1.2.2) – A schedule or the convention used for determining when pickup and disposal of waste materials occurs. Also provide a schedule for routine inspections for leaks and conditions of drums, tanks and containers.
- Maintenance (See Part 2.1.2.3) – Preventative maintenance procedures, including regular inspections, testing, maintenance and repair of all control measures to avoid situations that may result in leaks, spills, and other releases, and any back-up practices in place should a runoff event occur while a control measure is off-line. The SWPPP shall include the schedule or frequency for maintaining all control measures used to comply with the effluent limits in Part 2;
- Spill Prevention and Response Procedures (See Part 2.1.2.4) – Procedures for preventing and responding to spills and leaks, including notification procedures. For preventing spills, include in your SWPPP the control measures for material handling and storage, and the procedures for preventing spills that can contaminate stormwater. Also specify cleanup equipment, procedures and spill logs, as appropriate, in the event of spills. You may reference the existence of other plans for Spill Prevention Control and Countermeasure (SPCC) developed for the facility under section 311 of the CWA or BMP programs otherwise required by an NPDES permit for the facility, provided that you keep a copy of that other plan onsite and make it available for review consistent with Part 5.4;
- Erosion and Sediment Controls (Part 2.1.2.5) – If you use polymers and/or other chemical treatments as part of your controls, you must identify the polymers and/or chemicals used and the purpose;
- Employee Training (Part 2.1.2.8) – The elements of your employee training plan shall include all, but not be limited to, the requirements set forth in Part 2.1.2.8, and also the following:
  - The content of the training;
  - The frequency/schedule of training for employees who work in areas where industrial materials or activities are exposed to stormwater, or who are responsible for implementing activities necessary to meet the conditions of this permit;
  - A log of the dates on which specific employees received training.

5.2.5.2 Pertaining to Inspections and Assessments. You must document in your SWPPP your procedures for performing, as appropriate, the types of inspections specified by this permit, including:

- Routine facility inspections (see Part 3.1) and;
- Quarterly visual assessment of stormwater discharges (see Part 3.2).

For each type of inspection performed, your SWPPP must identify:

- Person(s) or positions of person(s) responsible for inspection;

- Schedules for conducting inspections, including tentative schedule for facilities in climates with irregular stormwater runoff discharges (see Part 3.2.3);
- Specific items to be covered by the inspection, including schedules for specific outfalls.

If you are invoking the exception for inactive and unstaffed sites relating to routine facility inspections and quarterly visual assessments, you must include in your SWPPP the information to support this claim as required by Parts 3.1.1 and 3.2.3.

5.2.5.3 ***Pertaining to Monitoring.*** You must document in your SWPPP procedures for conducting the five types of analytical monitoring specified by this permit, where applicable to your facility, including:

- Benchmark monitoring (see Part 6.2.1);
- Effluent limitations guidelines monitoring (see Part 6.2.2);
- State- or tribal-specific monitoring (see Part 6.2.3);
- Impaired waters monitoring (see Part 6.2.4);
- Other monitoring as required by EPA (see Part 6.2.5).

For each type of monitoring, your SWPPP must document:

- Locations where samples are collected, including any determination that two or more outfalls are substantially identical;
- Parameters for sampling and the frequency of sampling for each parameter;
- Schedules for monitoring at your facility, including schedule for alternate monitoring periods for climates with irregular stormwater runoff (see Part 6.1.6);
- Any numeric control values (benchmarks, effluent limitations guidelines, TMDL-related requirements, or other requirements) applicable to discharges from each outfall;
- Procedures (e.g., responsible staff, logistics, laboratory to be used) for gathering storm event data, as specified in Part 6.1.

If you are invoking the exception for inactive and unstaffed sites for benchmark monitoring or impaired waters monitoring, you must include in your SWPPP the information to support this claim as required by Part 6.2.1.3 and 6.2.4.2.

You must document the following in your SWPPP if you plan to use the substantially identical outfall exception for your quarterly visual assessment requirements in Part 3.2.3 or your benchmark or impaired waters monitoring requirements in Parts 6.2.1 and 6.2.4.1 (see also Part 6.1.1):

- Location of each of the substantially identical outfalls;
- Description of the general industrial activities conducted in the drainage area of each outfall;
- Description of the control measures implemented in the drainage area of each outfall;

- Description of the exposed materials located in the drainage area of each outfall that are likely to be significant contributors of pollutants to stormwater discharges;
- An estimate of the runoff coefficient of the drainage areas (low = under 40%; medium = 40 to 65%; high = above 65%);
- Why the outfalls are expected to discharge substantially identical effluents.

5.2.6 Documentation to Support Eligibility Considerations Under Other Federal Laws.

5.2.6.1 Documentation Regarding Endangered and Threatened Species and Critical Habitat Protection. You must keep with your SWPPP the documentation supporting your determination with regard to Part 1.1.4.5 (Endangered and Threatened Species and Critical Habitat Protection).

5.2.6.2 Documentation Regarding Historic Properties. You must keep with your SWPPP the documentation supporting your determination with regard to Part 1.1.4.6 (Historic Properties Preservation).

5.2.7 Signature Requirements. You must sign and date your SWPPP in accordance with Appendix B, Subsection 11.

5.3 Required SWPPP Modifications.

You must modify your SWPPP based on the corrective actions and deadlines required under Part 4.3 and that you documented under Part 4.4. SWPPP modifications must be signed and dated in accordance with Appendix B, Subsection 11.

5.4 SWPPP Availability.

You must retain a complete copy of your current SWPPP required by this permit at the facility in any accessible format. A complete SWPPP includes any documents incorporated by reference and all documentation supporting your permit eligibility pursuant to Part 1.1 of this permit, as well as your signed and dated certification page. Regardless of the format, the SWPPP must be immediately available to facility employees, EPA, a state or tribe, the operator of an MS4 into which you discharge, and representatives of the U.S. Fish and Wildlife Service (USFWS) or the National Marine Fisheries Service (NMFS) at the time of an onsite inspection. Your current SWPPP or certain information from your current SWPPP described below must also be made available to the public (except any confidential business information (CBI) or restricted information [as defined in Appendix A]), but you must clearly identify those portions of the SWPPP that are being withheld from public access; to do so, you must comply with one of the following two options:

5.4.1 SWPPP Posting on the Internet.

If you provide a URL in your NOI where your SWPPP can be found, and maintain your current SWPPP at this URL, you will have complied with the public availability requirements for the SWPPP. To remain current, you must post any SWPPP modifications, records and other reporting elements required for the previous year at the same URL as the main body of the SWPPP. The SWPPP update shall be no later than 45 days after conducting the final routine facility inspection for the year required in Part 3.1. If you did not provide a SWPPP URL in your NOI, you may reopen your NOI at any time subsequent to your original NOI submittal to add a URL where your current SWPPP can be found. You are not required to post any CBI or restricted information (as defined in Appendix A) (such information may be redacted), but you must clearly identify those portions of the SWPPP that are being withheld from public access. CBI may not be withheld from those staff cleared for CBI review within EPA, USFWS or NMFS.

5.4.2 SWPPP Information Provided on NOI Form.

If you did not provide a SWPPP URL in your NOI, your NOI must include the information required by Part 7.3. Irrespective of this requirement, EPA may provide access to portions of your SWPPP to a member of the public upon request (except any CBI or restricted information (as defined in Appendix A)). To remain current, you must report any modifications to the SWPPP information required by Part 7.3 through submittal of an "Change NOI" form. The SWPPP update shall be no later than 45 days after conducting the final routine facility inspection for the year required in Part 3.1.

5.5 Additional Documentation Requirements.

You are required to keep the following inspection, monitoring, and certification records with your SWPPP that together keep your records complete and up-to-date, and demonstrate your full compliance with the conditions of this permit:

- A copy of the NOI submitted to EPA along with any correspondence exchanged between you and EPA specific to coverage under this permit;
- A copy of the acknowledgment you receive from the EPA assigning your NPDES ID;
- A copy of this permit (an electronic copy easily available to SWPPP personnel is also acceptable);
- Documentation of maintenance and repairs of control measures, including the date(s) of regular maintenance, date(s) of discovery of areas in need of repair/replacement, and for repairs, date(s) that the control measure(s) returned to full function, and the justification for any extended maintenance/repair schedules (see Part 2.1.2.3);
- All inspection reports, including the Routine Facility Inspection Reports (see Part 3.1.2) and Quarterly Visual Assessment Reports (see Part 3.2.2);
- Description of any deviations from the schedule for visual assessments and/or monitoring, and the reason for the deviations (e.g., adverse weather or it was impracticable to collect samples within the first 30 minutes of a measurable storm event) (see Parts 3.2.3 and 6.1.5);
- Corrective action documentation required per Part 4.4;
- Documentation of any benchmark exceedances and the type of response to the exceedance you employed, including:
  - the corrective action taken;
  - a finding that the exceedance was due to natural background pollutant levels;
  - a determination from EPA that benchmark monitoring can be discontinued because the exceedance was due to run-on; or
  - a finding that no further pollutant reductions were technologically available and economically practicable and achievable in light of best industry practice consistent with Part 6.2.1.2.
- Documentation to support any determination that pollutants of concern are not expected to be present above natural background levels if you discharge directly to impaired waters, and that such pollutants were not detected in your discharge or were solely attributable to natural background sources (see Part 6.2.4.1); and

- Documentation to support your claim that your facility has changed its status from active to inactive and unstaffed with respect to the requirements to conduct routine facility inspections (see Part 3.1.1), quarterly visual assessments (see Part 3.2.3), benchmark monitoring (see Part 6.2.1.3), and/or impaired waters monitoring (see Part 6.2.4.2).

6. Monitoring.

You must collect and analyze stormwater samples and document monitoring activities consistent with the procedures described in Part 6 and Appendix B, Subsections 10 – 12, and any additional sector-specific or state/tribal-specific requirements in Parts 8 and 9, respectively. Refer to Part 7 for reporting and recordkeeping requirements.

6.1 Monitoring Procedures.

6.1.1 Monitored Outfalls.

Applicable monitoring requirements apply to each outfall authorized by this permit, except as otherwise exempt from monitoring as a "substantially identical outfall." If your facility has two or more outfalls that you believe discharge substantially identical effluents, based on the similarities of the general industrial activities and control measures, exposed materials that may significantly contribute pollutants to stormwater, and runoff coefficients of their drainage areas, you may monitor the effluent of just one of the outfalls and report that the results also apply to the substantially identical outfall(s). As required in Part 5.2.5.3, your SWPPP must identify each outfall authorized by this permit and describe the rationale for any substantially identical outfall determinations. The allowance for monitoring only one of the substantially identical outfalls is not applicable to any outfalls with numeric effluent limitations. You are required to monitor each outfall covered by a numeric effluent limit as identified in Part 6.2.2.

6.1.2 Commingled Discharges.

If discharges authorized by this permit commingle with discharges not authorized under this permit, any required sampling of the authorized discharges must be performed at a point before they mix with other waste streams, to the extent practicable.

6.1.3 Measurable Storm Events.

All required monitoring must be performed on a storm event that results in an actual discharge from your site ("measurable storm event") that follows the preceding measurable storm event by at least 72 hours (three days). The 72-hour (3-day) storm interval does not apply if you are able to document that less than a 72-hour (3-day) interval is representative for local storm events during the sampling period. In the case of snowmelt, the monitoring must be performed at a time when a measurable discharge occurs at your site.

For each monitoring event, except snowmelt monitoring, you must identify the date and duration (in hours) of the rainfall event, rainfall total (in inches) for that rainfall event, and time (in days) since the previous measurable storm event. For snowmelt monitoring, you must identify the date of the sampling event.

6.1.4 Sample Type.

You must take a minimum of one grab sample from a discharge resulting from a measurable storm event as described in Part 6.1.3. Samples must be collected within the first 30 minutes of a discharge associated with a measurable storm event. If it is not possible to collect the sample within the first 30 minutes of a measurable storm event, the sample must be collected as soon as practicable after the first 30 minutes and documentation must be kept with the SWPPP explaining why it was not possible to take samples within the first 30 minutes. In the case of snowmelt, samples must be taken during a period with a measurable discharge.

6.1.5 Adverse Weather Conditions.

When adverse weather conditions as described in Part 3.2.3 prevent the collection of samples according to the relevant monitoring schedule, you must take a substitute sample

during the next qualifying storm event. Adverse weather does not exempt you from having to file a benchmark monitoring report in accordance with your sampling schedule. As specified in Part 7.4, you must use NetDMR to report any failure to monitor using a "no data" or "NODI" code during the regular reporting period.

6.1.6 Climates with Irregular Stormwater Runoff.

If your facility is located in areas where limited rainfall occurs during parts of the year (e.g., arid or semi-arid climates) or in areas where freezing conditions exist that prevent runoff from occurring for extended periods, required monitoring events may be distributed during seasons when precipitation occurs, or when snowmelt results in a measurable discharge from your site. You must still collect the required number of samples. As specified in Part 7.4, you must also use NetDMR to report using a "no data" or "NODI" code for any of the regular reporting periods that there was no monitoring.

6.1.7 Monitoring Periods.

Monitoring requirements in this permit begin in the first full quarter following either September 2, 2015 or your date of discharge authorization, whichever date comes later. If your monitoring is required on a quarterly basis (e.g., benchmark monitoring), you must monitor at least once in each of the following 3-month intervals:

- January 1 – March 31;
- April 1 – June 30;
- July 1 – September 30;
- October 1 – December 31.

For example, if you obtain permit coverage on July 2, 2015, then your first monitoring quarter is October 1 - December 31, 2015. This monitoring schedule may be modified in accordance with Part 6.1.6 if the revised schedule is documented with your SWPPP. However, using NetDMR you must report using a "no data" or "NODI" code for any 3-month interval that you did not take a sample.

6.1.8 Monitoring for Allowable Non-Stormwater Discharges.

You are only required to monitor allowable non-stormwater discharges (as delineated in Part 1.1.3) when they are commingled with stormwater discharges associated with industrial activity.

6.1.9 Monitoring Reports

Monitoring data must be reported using EPA's electronic NetDMR tool at www.epa.gov/netdmr, as described in Part 7.4 (unless a waiver from electronic reporting has been granted from the EPA Regional Office, in which case you may submit a paper DMR form).

6.2 Required Monitoring.

This permit includes five types of required analytical monitoring, one or more of which may apply to your discharge:

- Quarterly benchmark monitoring (see Part 6.2.1);
- Annual effluent limitations guidelines monitoring (see Part 6.2.2);
- State- or tribal-specific monitoring (see Part 6.2.3);

- Impaired waters monitoring (see Part 6.2.4); and
- Other monitoring as required by EPA (see Part 6.2.5).

When more than one type of monitoring for the same pollutant at the same outfall applies (e.g., total suspended solids once per year for an effluent limitation and once per quarter for benchmark monitoring at a given outfall), you may use a single sample to satisfy both monitoring requirements (i.e., one sample satisfying both the annual effluent limitation sample and one of the four quarterly benchmark monitoring samples). When the effluent limitation is lower than the benchmark concentration for the same pollutant, your corrective action trigger is based on an exceedance of the effluent limitation, which would subject you to the corrective action requirements of Part 4.1.

Note: Exceedance of an effluent limitation associated with the results of any analytical monitoring type required by this Part subjects you to the corrective action requirements of Part 4.1.

All required monitoring must be conducted in accordance with the procedures described in Appendix B, Subsection B.10.

6.2.1 Benchmark Monitoring.

This permit specifies pollutant benchmark concentrations that are applicable to certain sectors / subsectors. Benchmark monitoring data are primarily for your use to determine the overall effectiveness of your control measures and to assist you in determining when additional corrective action(s) may be necessary to comply with the effluent limitations in Part 2.

The benchmark concentrations are not effluent limitations; a benchmark exceedance, therefore, is not a permit violation. However, if corrective action is required as a result of a benchmark exceedance, failure to conduct required corrective action is a permit violation.

At your discretion, more than four samples may be taken during separate runoff events and used to determine the average benchmark parameter concentration for facility discharges.

6.2.1.1 ***Applicability of Benchmark Monitoring.*** You must monitor for any benchmark parameters specified for the industrial sector(s), both primary industrial activity and any co-located industrial activities, applicable to your discharge. Your industry-specific benchmark concentrations are listed in the sector-specific sections of Part 8. If your facility is in one of the industrial sectors subject to benchmark concentrations that are hardness-dependent, you are required to submit to EPA with your NOI a hardness value, established consistent with the procedures in Appendix J, which is representative of your receiving water.

Samples must be analyzed consistent with 40 CFR Part 136 analytical methods and using test procedures with quantitation limits at or below benchmark values for all benchmark parameters for which you are required to sample.

6.2.1.2 ***Benchmark Monitoring Schedule.*** Benchmark monitoring must be conducted quarterly, as identified in Part 6.1.7, for your first four full quarters of permit coverage commencing no earlier than September 2, 2015.

Facilities in climates with irregular stormwater runoff, as described in Part 6.1.6, may modify this quarterly schedule provided that this revised schedule is reported directly to EPA by the due date of the first benchmark sample (see EPA Regional contacts in Part 7.9.1), and that this revised schedule is kept with the facility's SWPPP as specified in Part 5.5. When conditions prevent you from obtaining four samples in four consecutive quarters, you must continue monitoring until you have the four samples required for calculating your benchmark monitoring average. As noted in Part 6.1.7, you must use NetDMR to report using a "no data" or "NODI" code for any 3-month interval that you did not take a sample.

Data not exceeding benchmarks: After collection of four quarterly samples, if the average of the four monitoring values for any parameter does not exceed the benchmark, you have fulfilled your monitoring requirements for that parameter for the permit term.

Data exceeding benchmarks: After collection of four quarterly samples, if the average of the four monitoring values for any parameter exceeds the benchmark, you must, in accordance with Part 4, review the selection, design, installation, and implementation of your control measures to determine if modifications are necessary to meet the effluent limits in this permit, and either:

- Make the necessary modifications and continue quarterly monitoring until you have completed four additional quarters of monitoring for which the average does not exceed the benchmark; or
- Make a determination that no further pollutant reductions are technologically available and economically practicable and achievable in light of best industry practice to meet the technology-based effluent limits or are necessary to meet the water-quality-based effluent limitations in Parts 2.1 and 2.2 of this permit, in which case you must continue monitoring once per year. You must also document your rationale for concluding that no further pollutant reductions are achievable, and retain all records related to this documentation with your SWPPP.

You must review your control measures and perform any required corrective action immediately (or document why no corrective action is required), per Part 4, without waiting for the full four quarters of monitoring data, when an exceedance of the four quarter average is mathematically certain. If after modifying your control measures and conducting four additional quarters of monitoring, your average still exceeds the benchmark (or if an exceedance of the benchmark by the four quarter average is mathematically certain prior to conducting the full four additional quarters of monitoring), you must again review your control measures and take one of the two actions above.

***Natural background pollutant levels*:** Following the first four quarters of benchmark monitoring (or sooner if the exceedance is triggered by less than four quarters of data; see above), if the average concentration of a pollutant exceeds a benchmark value, and you determine that exceedance of the benchmark is attributable solely to the presence of that pollutant in the natural background, you are not required to perform corrective action or additional benchmark monitoring provided that:

- The average concentration of your benchmark monitoring results is less than or equal to the concentration of that pollutant in the natural background; and

- You document and maintain with your SWPPP, as required in Part 5.5, your supporting rationale for concluding that benchmark exceedances are in fact attributable solely to natural background pollutant levels. You must include in your supporting rationale any data previously collected by you or others (including literature studies) that describe the levels of natural background pollutants in your stormwater discharge.

Natural background pollutants are those substances that are naturally occurring in soils or ground water. Natural background pollutants do not include legacy pollutants from earlier activity on your site, or pollutants in run-on from neighboring sources which are not naturally occurring, such as other industrial sites or roadways. However, the EPA Regional Office may determine that you are eligible to discontinue monitoring for pollutants that occur solely from run-on sources.

6.2.1.3 ***Exception for Inactive and Unstaffed Sites.*** The requirement for benchmark monitoring does not apply at a facility that is inactive and unstaffed, provided that there are no industrial materials or activities exposed to stormwater. To invoke this exception, you must do the following:

- Maintain a statement with your SWPPP stating that the site is inactive and unstaffed, and that there are no industrial materials or activities exposed to stormwater in accordance with the substantive requirements in 40 CFR 122.26(g) and sign and certify the statement in accordance with Appendix B, Subsection 11.
- If circumstances change and industrial materials or activities become exposed to stormwater or your facility becomes active and/or staffed, this exception no longer applies and you must immediately begin complying with the applicable benchmark monitoring requirements under Part 6.2 as if you were in your first year of permit coverage. You must indicate in your NOI that your facility has materials or activities exposed to stormwater or has become active and/or staffed.
- If you are not qualified for this exception at the time you are authorized under this permit, but during the permit term you become qualified because your facility is inactive and unstaffed, and there are no industrial materials or activities that are exposed to stormwater, then you must notify EPA of this change on your NOI form. You may discontinue benchmark monitoring once you have notified EPA, and prepared and signed the certification statement described above concerning your facility's qualification for this special exception.

Note: This exception has different requirements for Sectors G, H, and J (see Part 8).

6.2.2 Effluent Limitations Monitoring.

6.2.2.1 ***Monitoring Based on Effluent Limitations Guidelines.*** Table 6-1 identifies the stormwater discharges subject to effluent limitation guidelines that are authorized for coverage under this permit. An exceedance of the effluent limitation is a permit violation. Beginning in the first full quarter following September 2, 2015 or your date of discharge authorization, whichever date comes later, you must monitor once per year at each outfall containing the discharges identified in Table 6-1 for the parameters specified in the sector-specific section of Part 8.

Table 6-1. Required Monitoring for Effluent Limits Based on Effluent Limitations Guidelines

Regulated Activity	Effluent Limit	Monitoring Frequency	Sample Type
Discharges resulting from spray down or intentional wetting of logs at wet deck storage areas	See Part 8.A.7	1/year	Grab
Runoff from phosphate fertilizer manufacturing facilities that comes into contact with any raw materials, finished product, by-products or waste products (SIC 2874)	See Part 8.C.4	1/year	Grab
Runoff from asphalt emulsion facilities	See Part 8.D.4	1/year	Grab
Runoff from material storage piles at cement manufacturing facilities	See Part 8.E.5	1/year	Grab
Mine dewatering discharges at crushed stone, construction sand and gravel, or industrial sand mining facilities	See Part 8.J.9	1/year	Grab
Runoff from hazardous waste landfills	See Part 8.K.6	1/year	Grab
Runoff from non-hazardous waste landfills	See Part 8.L.10	1/year	Grab
Runoff from coal storage piles at steam electric generating facilities	See Part 8.O.8	1/year	Grab
Runoff containing urea from airfield pavement deicing at existing and new primary airports with 1,000 or more annual non-propeller aircraft departures.	See Part 8.S.8	1/year	Grab

6.2.2.2 ***Substantially Identical Outfalls.*** You must monitor each outfall discharging runoff from any regulated activity identified in Table 6-1. The substantially identical outfall monitoring provisions are not available for numeric effluent limits monitoring.

6.2.2.3 ***Follow-up Actions if Discharge Exceeds Numeric Effluent Limitation.*** If any monitoring value exceeds a numeric effluent limitation contained in this permit, you must indicate the exceedance on a "Change NOI" form in the NPDES eReporting Tool (NeT), and you must conduct follow-up monitoring within 30 calendar days (or during the next qualifying runoff event, should none occur within 30 days) of implementing corrective action(s) taken per Part 4. When your follow-up monitoring exceeds the applicable effluent limitation, you must:

- ***Submit an Exceedance Report:*** You must submit an Exceedance Report no later than 30 days after you have received your laboratory result consistent with Part 7.6; and
- ***Continue to Monitor:*** You must monitor, at least quarterly, until your discharge is in compliance with the effluent limit or until EPA waives the requirement for additional monitoring. Once your discharge is back in compliance with the effluent limitation you must indicate this on a "Change NOI" form per Part 7.4.

6.2.3 State or Tribal Monitoring Provisions.

6.2.3.1 ***Sectors Required to Conduct State or Tribal Monitoring.*** You must comply with any state or tribal monitoring requirements (see Part 9) applicable to your facility's location.

6.2.3.2 ***State or Tribal Monitoring Schedule.*** If a monitoring frequency is not specified for an applicable requirement in Part 9, you must monitor once per year for the entire permit term.

6.2.4 Discharges to Impaired Waters Monitoring.

Note: For the purposes of this permit, your project is considered to discharge to an impaired water if the first water of the U.S. to which you discharge is identified by a state, tribe, or EPA pursuant to section 303(d) of the CWA as not meeting an applicable water quality standard, or has been removed from the 303(d) list either because the impairments are addressed by an EPA-approved or established TMDL or is covered by pollution control requirements that meet the requirements of 40 CFR 130.7(b)(1). For discharges that enter a separate storm sewer system[4] prior to discharge, the first water of the U.S. to which you discharge is the waterbody that receives the stormwater discharge from the storm sewer system.

6.2.4.1 Permittees Required to Monitor Discharges to Impaired Waters.

Discharges to impaired waters without an EPA-approved or established TMDL: Beginning in the first full quarter following September 2, 2015 or your date of discharge authorization, whichever date comes later, you must monitor all pollutants for which the waterbody is impaired and for which a standard analytical method exists (see 40 CFR Part 136) once per year at each outfall (except substantially identical outfalls) discharging stormwater to impaired waters without an EPA-approved or established TMDL.

If the pollutant of concern for the impaired waterbody is suspended solids, turbidity or sediment/sedimentation, you must monitor for Total Suspended Solids (TSS). If a pollutant of concern is expressed in the form of an indicator or surrogate pollutant, you must monitor for that indicator or surrogate pollutant. No monitoring is required when a waterbody's biological communities are impaired but no pollutant, including indicator or surrogate pollutants, is specified as causing the impairment, or when a waterbody's impairment is related to hydrologic modifications, impaired hydrology, or other non-pollutant. Permittees should consult the appropriate EPA Regional Office for any available guidance regarding required monitoring parameters under this part.

If the pollutant of concern is not detected and not expected to be present in your discharge, or it is detected but you have determined that its presence is caused solely by natural background sources, you may discontinue monitoring for that pollutant. To support a determination that the pollutant's presence is caused solely by natural background sources, you must document and maintain with your SWPPP, as required by Part 5.5:

- An explanation of why you believe that the presence of the pollutant of concern in your discharge is not related to the activities or materials at your facility; and
- Data and/or studies that tie the presence of the pollutant of concern in your discharge to natural background sources in the watershed.

Natural background pollutants include those that occur naturally as a result of native soils, and vegetation, wildlife, or ground water. Natural background pollutants do not include legacy pollutants from earlier activity on your site, or pollutants in run-on from neighboring sources that are not naturally occurring. However, you may be eligible to discontinue annual monitoring for pollutants that

4 Separate storm systems do not include combined sewer systems or sanitary sewer systems. Separate storm systems include both municipal storm sewer systems (MS4s) and non-municipal separate storm sewers.

occur solely from these sources and should consult the appropriate EPA Regional Office for related guidance.

Discharges to impaired waters with an EPA-approved or established TMDL: For stormwater discharges to waters for which there is an EPA-approved or established TMDL, you are not required to monitor for the pollutant(s) for which the TMDL was written unless EPA informs you, upon examination of the applicable TMDL and its wasteload allocation, that you are subject to such a requirement consistent with the assumptions and requirements of the applicable TMDL and its wasteload allocation. EPA's notice will include specifications on monitoring parameters and frequency. Permittees must consult the appropriate EPA Regional Office for guidance regarding required monitoring under this Part.

6.2.4.2 ***Exception for Inactive and Unstaffed Sites.*** The requirement for impaired waters monitoring does not apply at a facility that is inactive and unstaffed, as long as there are no industrial materials or activities exposed to stormwater. To invoke this exception, you must do the following:

- Maintain a statement with your SWPPP stating that the site is inactive and unstaffed, and that there are no industrial materials or activities exposed to stormwater in accordance with the substantive requirements in 40 CFR 122.26(g) and sign and certify the statement in accordance with Appendix B, Subsection 11.
- If circumstances change and industrial materials or activities become exposed to stormwater or your facility becomes active and/or staffed, this exception no longer applies and you must immediately begin complying with the applicable impaired waters monitoring requirements under Part 6.2 as if you were in your first year of permit coverage. You must indicate in a "Change NOI" form per Part 7.4 that your facility has materials or activities exposed to stormwater or has become active and/or staffed.
- If you are not qualified for this exception at the time you are authorized under this permit, but during the permit term you become qualified because your facility is inactive and unstaffed, and there are no industrial materials or activities that are exposed to stormwater, then you must notify EPA of this change on your NOI form. You may discontinue impaired waters monitoring once you have notified EPA, and prepared and signed the certification statement described above concerning your facility's qualification for this special exception.

Note: This exception has different requirements for Sectors G, H, and J (see Part 8).

6.2.5 Additional Monitoring Required by EPA.

EPA may notify you of additional discharge monitoring requirements that EPA determines are necessary to meet the permit's effluent limitations. Any such notice will briefly state the reasons for the monitoring, locations, and parameters to be monitored, frequency and period of monitoring, sample types, and reporting requirements.

7. Reporting and Recordkeeping.

7.1 Electronic Reporting Requirement.

You must submit all NOIs, NOTs, NOEs, Annual Reports, Discharge Monitoring Reports (DMRs), and other reporting information as appropriate electronically, unless you have received a waiver from your EPA Regional Office based on one of the following conditions:

- If your headquarters is physically located in a geographic area (i.e., zip code or census tract) that is identified as under-served for broadband Internet access in the most recent report from the Federal Communications Commission; or
- If you have limitations regarding available computer access or computer capability.

Waivers are only granted for a one-time use for a single information submittal, i.e., an initial waiver does not apply for the entire term of the permit. If you need to submit information on paper after your first waiver, you must apply for a new waiver. However, waivers may be extended on a case-by-case basis by the EPA Regional Office.

If you wish to obtain a waiver from submitting a report electronically, you must submit a request to your EPA Regional Office. EPA Regional Office contact information can be found in Part 7.9.1 of this permit. In that request you must document which exemption you meet, provide evidence supporting any claims, and a copy of your completed NOI form. A waiver may only be considered granted once you receive written confirmation from EPA or its authorized representative.

7.2 Submitting Information to EPA.

Most information required to be submitted by this permit shall be submitted via EPA's electronic NPDES eReporting tool (NeT), unless the permit states otherwise or unless a waiver has been granted per Part 7.1. NeT allows you to both prepare and submit required information using specific forms, found in the permit's appendices. To access NeT, go to http://water.epa.gov/polwaste/npdes/stormwater/Stormwater-eNOI-System-for-EPAs-MultiSector-General-Permit.cfm.

Information required to be submitted to EPA via NeT:

- Notice of Intent (Part 1.2);
- No Exposure Certification (Part 1.4);
- Notice of Termination (Part 1.3); and
- Annual Report (Part 7.5).

Note: Discharge Monitoring Reports (see Part 7.4) are required to be submitted using EPA's NetDMR system, available at www.epa.gov/netdmr.

If you are given a waiver by the EPA Regional Office to submit information in paper form, you must utilize the required forms found in the Appendices.

Information required to be submitted to an EPA Regional Office at the address in Part 7.9.1:

- New Dischargers and New Sources to Water Quality-Impaired Waters (Part 1.1.4.8);

- Exceedance Report for Numeric Effluent Limitations (Part 7.6); and
- Additional Reporting (Part 7.7)

7.3 Additional SWPPP Information Required in Your NOI.

If you did not provide a SWPPP URL in your NOI per Part 5.4.1, your NOI must include the additional SWPPP information as follows:

- Onsite industrial activities exposed to stormwater, including potential spill and leak areas (see Parts 5.2.3.1, 5.2.3.3 and 5.2.3.5);
- Pollutants or pollutant constituents associated with each industrial activity exposed to stormwater that could be discharged in stormwater and/or any authorized non-stormwater discharges listed in Part 1.1.3 (see Part 5.2.3.2);
- Stormwater control measures you employ to comply with the non-numeric technology-based effluent limits required in Part 2.1.2 and Part 8, and any other measures taken to comply with the requirements in Part 2.2 Water Quality - Based Effluent Limitations (see Part 5.2.4). If you use polymers and/or other chemical treatments as part of your controls, you must identify the polymers and/or chemicals used and the purpose; and
- Schedule for good housekeeping and maintenance (see Part 5.2.5.1) and schedule for all inspections required in Part 3 (see Part 5.2.5.2).

7.4 Reporting Monitoring Data to EPA.

All monitoring data collected pursuant to Part 6.2 must be submitted to EPA using EPA's NetDMR system (available at www.epa.gov/netdmr) (unless a waiver from electronic reporting has been granted, in which case you may submit a paper DMR form) no later than 30 days after you have received your complete laboratory results for all monitoring outfalls for the reporting period. Your monitoring requirements (i.e., parameters required to be monitored and sample frequency) will be prepopulated on your electronic Discharge Monitoring Report (DMR) form based on the information you reported on your NOI form (through the NDPES eReporting tool (NeT)). Accordingly, the following changes to your monitoring frequency must be reported to EPA through the submittal of a "Change NOI" form in NeT, which will trigger changes to your monitoring requirements in NetDMR:

- All benchmark monitoring requirements have been fulfilled for the permit term;
- All impaired waters monitoring requirements have been fulfilled for the permit term;
- Benchmark and/or impaired monitoring requirements no longer apply because your facility is inactive and unstaffed;
- Benchmark and/or impaired monitoring requirements now apply because your facility has changed from inactive and unstaffed to active and staffed;
- For Sector G2 only: Discharges from waste rock and overburden piles have exceeded benchmark values;
- A numeric effluent limitation guideline has been exceeded;
- A numeric effluent limitation guideline exceedance is back in compliance.

Once monitoring requirements have been completely fulfilled, you are no longer required to report monitoring results using NetDMR. If you have only partially fulfilled your benchmark monitoring and/or impaired waters monitoring requirements (e.g., your four

quarterly average is below the benchmark for some, but not all, parameters; you did not detect some, but not all, impairment pollutants), you must continue to use NetDMR to report your results, but you must report a "no data" or "NODI" code for any monitoring parameters that have been fulfilled.

If you have received a waiver per Part 7.1, paper reporting forms must be submitted by the same deadline.

See Part 9 for specific reporting requirements applicable to individual states or tribes.

For benchmark monitoring, note that you are required to submit sampling results to EPA no later than 30 days after receiving your complete laboratory results for all monitored outfalls for each quarter that you are required to collect benchmark samples, per Part 6.2.1.2. If you collect samples during multiple storm events in a single quarter (e.g., due to adverse weather conditions, climates with irregular stormwater runoff, or areas subject to snow), you are required to submit all sampling results for each storm event to EPA within 30 days of receiving all laboratory results for the event. Or, for any of your monitored outfalls that did not have a discharge within the reporting period, using NetDMR you must report using a "no data" or "NODI" code for that outfall no later than 30 days after the end of the reporting period.

7.5 Annual Report.

You must submit an Annual Report to EPA electronically, per Part 7.2, by January 30th for each year of permit coverage containing information generated from the past calendar year. You must include the following information:

- A summary of your past year's routine facility inspection documentation required (Part 3.1.2). In addition, if you are an operator of an airport facility (Sector S) that is subject to the airport effluent limitations guidelines, and are complying with the Part 8.S.8.1 effluent limitation through the use of non-urea-containing deicers, provide a statement certifying that you do not use pavement deicers containing urea. (Note: Operators of airport facilities that are complying with Part 8.S.8.1 by meeting the numeric effluent limitation for ammonia do not need to include this statement.)
- A summary of your past year's quarterly visual assessment documentation (see Part 3.2.2 of the permit);
- For any four-sample (minimum) average benchmark monitoring exceedance, if after reviewing the selection, design, installation, and implementation of your control measures and considering whether any modifications are necessary to meet the effluent limits in the permit, you determine that no further pollutant reductions are technologically available and economically practicable and achievable in light of best industry practice, your rationale for why you believe no further reductions are achievable (see Part 6.2.1.2 of the permit); and
- A summary of your past year's corrective action documentation (see Part 4.4). If corrective action is not yet completed at the time of submission of your annual report, you must describe the status of any outstanding corrective action(s). Also describe any incidents of noncompliance in the past year or currently ongoing, or if none, provide a statement that you are in compliance with the permit.

Your Annual Report must also include a statement, signed and certified in accordance with Appendix B, Subsection 11.

7.6 Exceedance Report for Numeric Effluent Limitations.

If follow-up monitoring per Part 6.2.2.3 exceeds a numeric effluent limit, you must submit an Exceedance Report to EPA no later than 30 days after you have received your laboratory results. Your report must include the following:

- NPDES ID;
- Facility name, physical address and location;
- Name of receiving water;
- Monitoring data from this and the preceding monitoring event(s);
- An explanation of the situation, including what you have done and intend to do (should your corrective actions not yet be complete) to correct the violation;
- An appropriate contact name and phone number.

Send the Exceedance Report to the appropriate EPA Regional Office listed in Part 7.9.1, and report the monitoring data through NetDMR

7.7 Additional Reporting.

In addition to the reporting requirements stipulated in Part 7, you are also subject to the standard permit reporting provisions of Appendix B, Subsection 12.

You must submit the following reports to the appropriate EPA Regional Office listed in Part 7.9.1, as applicable. If you discharge through an MS4, you must also submit these reports to the MS4 operator (identified pursuant to Part 5.2.2).

- 24-hour reporting (see Appendix B, Subsection 12.F) – You must report any noncompliance which may endanger health or the environment. Any information must be provided orally within 24 hours from the time you become aware of the circumstances;
- 5-day follow-up reporting to the 24 hour reporting (see Appendix B, Subsection 12.F) – A written submission must also be provided within five days of the time you become aware of the circumstances;
- Reportable quantity spills (see Part 2.1.2.4) – You must provide notification, as required under Part 2.1.2.4, as soon as you have knowledge of a leak, spill, or other release containing a hazardous substance or oil in an amount equal to or in excess of a reportable quantity;
- Planned changes (see Appendix B, Subsection 12.A) – You must give notice to EPA promptly, no fewer than 30 days prior to making any planned physical alterations or additions to the permitted facility that qualify the facility as a new source or that could significantly change the nature or significantly increase the quantity of pollutants discharged;
- Anticipated noncompliance (see Appendix B, Subsection 12.B) – You must give advance notice to EPA of any planned changes in the permitted facility or activity which you anticipate will result in noncompliance with permit requirements;

- Compliance schedules (see Appendix B, Subsection 12.F) – Reports of compliance or noncompliance with, or any progress reports on, interim and final requirements contained in any compliance schedule of this permit must be submitted no later than 14 days following each schedule date;
- Other noncompliance (see Appendix B, Subsection 12.G) – You must report all instances of noncompliance not reported in your annual report, compliance schedule report, or 24-hour report at the time monitoring reports are submitted; and
- Other information (see Appendix B, Subsection 12.H) – You must promptly submit facts or information if you become aware that you failed to submit relevant facts in your NOI, or that you submitted incorrect information in your NOI or in any report.

7.8 Recordkeeping.

You must retain copies of your SWPPP (including any modifications made during the term of this permit), additional documentation requirements pursuant to Part 5.5 (including documentation related to corrective actions taken pursuant to Part 4), all reports and certifications required by this permit, monitoring data, and records of all data used to complete the NOI to be covered by this permit, for a period of at least three years from the date that your coverage under this permit expires or is terminated.

7.9 Addresses for Reports.

7.9.1 EPA Addresses.

7.9.1.1 Region 1: Connecticut, Massachusetts, and New Hampshire, Rhode Island, Vermont.

U.S. EPA Region 1
Office of Ecosystem Protection
Stormwater and Construction Permits Section
5 Post Office Square, Suite 100
(OEP 06-1)
Boston, MA 02109-3912

7.9.1.2 Region 2: New Jersey, New York, Puerto Rico, and Virgin Islands.

For Puerto Rico and the Virgin Islands

U.S. EPA Region 2
Caribbean Environmental Protection Division
NPDES Stormwater Program
City View Plaza II – Suite 7000
48 Rd. 165 Km 1.2
Guaynabo, PR 00968-8069

For New Jersey and New York:

(Coverage not available under this permit.)
U.S. EPA Region 2
NPDES Stormwater Program
290 Broadway, 24th Floor
New York, NY 10007-1866

7.9.1.3 Region 3: Delaware, District of Columbia, Maryland, Pennsylvania, Virginia, West Virginia.

U.S. EPA Region 3
Office of NPDES Permits and Enforcement
NPDES Permits Branch, Mailcode 3WP41
1650 Arch Street
Philadelphia, PA 19103

7.9.1.4 Region 4: Alabama, Florida, Georgia, Kentucky, Mississippi, North Carolina, South Carolina, Tennessee.

(Coverage not available under this permit.)

U.S. EPA Region 4
Water Protection Division
NPDES Stormwater Program
Atlanta Federal Center
61 Forsyth Street SW
Atlanta, GA 30303-3104

7.9.1.5 Region 5: Illinois, Indiana, Michigan, Minnesota, Ohio, Wisconsin.

U.S. EPA Region 5
NPDES Program Branch
77 W. Jackson Blvd.
Mail Code WN16J
Chicago, IL 60604-3507

7.9.1.6 Region 6: Arkansas, Louisiana, Oklahoma, Texas, and New Mexico (except see Region 9 for Navajo lands, and see Region 8 for Ute Mountain Reservation lands).

U.S. EPA Region 6
NPDES Stormwater Program (WQ-PP)
1445 Ross Avenue, Suite 1200
Dallas, TX 75202-2733

7.9.1.7 Region 7: Iowa, Kansas, Missouri, Nebraska.

U.S. EPA Region 7
NPDES Stormwater Program
11201 Renner Blvd
Lenexa, KS 66219

7.9.1.8 Region 8: Colorado, Montana, North Dakota, South Dakota, Wyoming, Utah (except see Region 9 for Goshute Reservation and Navajo Reservation lands), the Ute Mountain Reservation in New Mexico, and the Pine Ridge Reservation in Nebraska.

EPA Region 8 Storm Water Program
Mailcode: 8P-W-WW
1595 Wynkoop Street
Denver, CO 80202-1129

7.9.1.9 Region 9: Arizona, California, Hawaii, Nevada, Guam, American Samoa, the Commonwealth of the Northern Mariana Islands, the Goshute Reservation in Utah

and Nevada, the Navajo Reservation in Utah, New Mexico, and Arizona, the Duck Valley Reservation in Idaho, Fort McDermitt Reservation in Oregon.

U.S. EPA Region 9
Water Division
NPDES Stormwater Program (WTR-2-3)
75 Hawthorne Street
San Francisco, CA 94105-3901

7.9.1.10 Region 10: Alaska, Idaho, Oregon (except see Region 9 for Fort McDermitt Reservation), Washington.

U.S. EPA Region 10
NPDES Stormwater Program
1200 6th Avenue (OWW-191)
Seattle, WA 98101-3140

7.9.2 State and Tribal Addresses.

See Part 9 (states and tribes) for the addresses of applicable states or tribes that require submission of information to their agencies.

Part 8 – Sector-Specific Requirements for Industrial Activity

You must comply with the requirements applicable to your industrial sector(s) in this Part, in addition to the requirements applicable to all facilities in Parts 1 through 7 and the appendices to the permit.

Subpart A – Sector A – Timber Products.

You must comply with Part 8 sector-specific requirements associated with your primary industrial activity and any co-located industrial activities, as defined in Appendix A. The sector-specific requirements apply to those areas of your facility where those sector-specific activities occur. These sector-specific requirements are in addition to any requirements specified elsewhere in this permit.

8.A.1 Covered Stormwater Discharges.

The requirements in Subpart A apply to stormwater discharges associated with industrial activity from Timber Products facilities as identified by the SIC Codes specified under Sector A in Table D-1 of Appendix D of the permit.

8.A.2 Limitations on Coverage.

8.A.2.1 ***Prohibition of Discharges.*** (See also Part 1.1.4) Not covered by this permit: stormwater discharges from areas where there may be contact with the chemical formulations sprayed to provide surface protection. These discharges must be covered by a separate NPDES permit.

8.A.2.2 ***Authorized Non-Stormwater Discharges.*** (See also Part 1.1.3) Also authorized by this permit, provided the non-stormwater component of the discharge is in compliance with the requirements in Part 2.1.2 (Non-Numeric Effluent Limits): discharges from the spray down of lumber and wood product storage yards where no chemical additives are used in the spray-down waters and no chemicals are applied to the wood during storage.

8.A.3 Additional Technology-Based Effluent Limits.

8.A.3.1 ***Good Housekeeping***. (See also Part 2.1.2.2) In areas where storage, loading and unloading, and material handling occur, perform good housekeeping to minimize the discharge of wood debris, leachate generated from decaying wood materials, and the generation of dust.

8.A.4 Additional SWPPP Requirements.

8.A.4.1 ***Drainage Area Site Map.*** (See also Part 5.2.2) Document in your SWPPP where any of the following may be exposed to precipitation or surface runoff: processing areas, treatment chemical storage areas, treated wood and residue storage areas, wet decking areas, dry decking areas, untreated wood and residue storage areas, and treatment equipment storage areas.

8.A.4.2 ***Inventory of Exposed Materials.*** (See also Part 5.2.3.2) Where such information exists, if your facility has used chlorophenolic, creosote, or chromium-copper-arsenic formulations for wood surface protection or preserving, document in your SWPPP the following: areas where contaminated soils, treatment equipment, and stored materials still remain and the management practices employed to minimize the contact of these materials with stormwater runoff.

8.A.4.3 ***Description of Stormwater Management Controls.*** (See also Part 5.2.4) Document measures implemented to address the following activities and sources: log, lumber, and wood product storage areas; residue storage areas; loading and unloading areas;

material handling areas; chemical storage areas; and equipment and vehicle maintenance, storage, and repair areas. If your facility performs wood surface protection and preservation activities, address the specific control measures, including any BMPs, for these activities.

8.A.5 Additional Inspection Requirements. (See also Part 3.1)

If your facility performs wood surface protection and preservation activities, inspect processing areas, transport areas, and treated wood storage areas monthly to assess the usefulness of practices to minimize the deposit of treatment chemicals on unprotected soils and in areas that will come in contact with stormwater discharges.

8.A.6 Sector-Specific Benchmarks. (See also Part 6)

Table 8.A-1 identifies benchmarks that apply to the specific subsectors of Sector A. These benchmarks apply to both your primary industrial activity and any co-located industrial activities.

Table 8.A-1

Subsector (You may be subject to requirements for more than one sector/subsector)	Parameter	Benchmark Monitoring Concentration
Subsector A1. General Sawmills and Planing Mills (SIC 2421)	Chemical Oxygen Demand (COD)	120.0 mg/L
	Total Suspended Solids (TSS)	100 mg/L
	Total Zinc (freshwater)[2] Total Zinc (saltwater)[1]	Hardness Dependent 0.09 mg/L
Subsector A2. Wood Preserving (SIC 2491)	Total Arsenic (freshwater) Total Arsenic (saltwater)[1]	0.15 mg/L 0.069 mg/L
	Total Copper (freshwater)[2] Total Copper (saltwater)[1]	Hardness Dependent 0.0048 mg/L
Subsector A3. Log Storage and Handling (SIC 2411)	Total Suspended Solids (TSS)	100 mg/L
Subsector A4. Hardwood Dimension and Flooring Mills; Special Products Sawmills, not elsewhere classified; Millwork, Veneer, Plywood, and Structural Wood; Wood Pallets and Skids; Wood Containers, not elsewhere classified; Wood Buildings and Mobile Homes; Reconstituted Wood Products; and Wood Products Facilities not elsewhere classified (SIC 2426, 2429, 2431-2439 (except 2434), 2441, 2448, 2449, 2451, 2452, 2493, and 2499)	Chemical Oxygen Demand (COD)	120.0 mg/L
	Total Suspended Solids (TSS)	100.0 mg/L

[1]Saltwater benchmark values apply to stormwater discharges into saline waters where indicated.
[2] The freshwater benchmark values of some metals are dependent on water hardness. For these parameters, permittees must determine the hardness of the receiving water (see Appendix J, "Calculating Hardness in Receiving Waters for Hardness Dependent Metals," for methodology), in accordance with Part 6.2.1.1, to identify the applicable 'hardness range' for determining their benchmark value applicable to their facility. Hardness Dependent Benchmarks follow in the table below:

Freshwater Hardness Range	**Copper** (mg/L)	**Zinc** (mg/L)
0-24.99 mg/L	0.0038	0.04
25-49.99 mg/L	0.0056	0.05
50-74.99 mg/L	0.0090	0.08
75-99.99 mg/L	0.0123	0.11
100-124.99 mg/L	0.0156	0.13
125-149.99 mg/L	0.0189	0.16
150-174.99 mg/L	0.0221	0.18
175-199.99 mg/L	0.0253	0.20
200-224.99 mg/L	0.0285	0.23
225-249.99 mg/L	0.0316	0.25
250+ mg/L	0.0332	0.26

8.A.7 Effluent Limitations Based on Effluent Limitations Guidelines. (See also Part 6.2.2)

Table 8.A-2 identifies effluent limits that apply to the industrial activities described below. Compliance with these effluent limits is to be determined based on discharges from these industrial activities independent of commingling with any other waste streams that may be covered under this permit.

Table 8.A-2[1]

Industrial Activity	**Parameter**	**Effluent Limitation**
Discharges resulting from spray down or intentional wetting of logs at wet deck storage areas	pH	6.0 - 9.0 s.u
	Debris (woody material such as bark, twigs, branches, heartwood, or sapwood)	No discharge of debris that will not pass through a 2.54-cm (1-in.) diameter round opening

[1] Monitor annually.

8.A.7.1 ***Credit for Pollutants in Intake Water.*** For discharges that are comprised solely of water drawn from the same body of water into which the discharges flow and that exceed an applicable effluent limitation, you may be eligible for a credit to the extent necessary to meet the limitation. To obtain this credit, you must show that your discharge would meet the limitation in the absence of the pollutant(s) in the intake water by demonstrating that the control measures you use to meet the limitation would, if properly installed and operated, meet the limitations for the pollutant (i.e., the pollutant level in your discharge is in exceedance of the limitation due to the pollutant concentration in the source or intake water). You must consult the appropriate EPA Regional Office for guidance in seeking a pollutant credit under this Part. EPA will notify you whether you are eligible for the credit, and, if so, provide the scope of such credit.

Part 8 – Sector-Specific Requirements for Industrial Activity

Subpart B – Sector B – Paper and Allied Products.

You must comply with Part 8 sector-specific requirements associated with your primary industrial activity and any co-located industrial activities, as defined in Appendix A. The sector-specific requirements apply to those areas of your facility where those sector-specific activities occur. These sector-specific requirements are in addition to any requirements specified elsewhere in this permit.

8.B.1 Covered Stormwater Discharges.

The requirements in Subpart B apply to stormwater discharges associated with industrial activity from Paper and Allied Products Manufacturing facilities, as identified by the SIC Codes specified under Sector B in Table D-1 of Appendix D of the permit.

8.B.2 Sector-Specific Benchmarks. (See also Part 6)

Table 8.B-1 identifies benchmarks that apply to the specific subsectors of Sector B. These benchmarks apply to both your primary industrial activity and any co-located industrial activities.

Table 8.B-1.

Subsector (You may be subject to requirements for more than one sector/subsector)	Parameter	Benchmark Monitoring Concentration
Subsector B1. Paperboard Mills (SIC Code 2631)	Chemical Oxygen Demand (COD)	120 mg/L

Part 8 – Sector-Specific Requirements for Industrial Activity

Subpart C – Sector C – Chemical and Allied Products Manufacturing, and Refining.

You must comply with Part 8 sector-specific requirements associated with your primary industrial activity and any co-located industrial activities, as defined in Appendix A. The sector-specific requirements apply to those areas of your facility where those sector-specific activities occur. These sector-specific requirements are in addition to any requirements specified elsewhere in this permit.

8.C.1 Covered Stormwater Discharges.

The requirements in Subpart C apply to stormwater discharges associated with industrial activity from Chemical and Allied Products Manufacturing, and Refining facilities, as identified by the SIC Codes specified under Sector C in Table D-1 of Appendix D of the permit.

8.C.2 Limitations on Coverage.

8.C.2.1 ***Prohibition of Non-Stormwater Discharges.*** (See also Part 1.1.4) The following are not covered by this permit: non-stormwater discharges containing inks, paints, or substances (hazardous, nonhazardous, etc.) resulting from an onsite spill, including materials collected in drip pans; wash water from material handling and processing areas; and wash water from drum, tank or container rinsing and cleaning. (EPA includes this prohibited non-stormwater discharge here solely as a helpful reminder to the operator that the only non-stormwater discharges authorized by this permit are at Part 1.1.3.)

8.C.3 Sector-Specific Benchmarks. (See also Part 6)

Table 8.C-1 identifies benchmarks that apply to the specific subsectors of Sector C. These benchmarks apply to both your primary industrial activity and any co-located industrial activities.

Table 8.C-1.		
Subsector (You may be subject to requirements for more than one sector/subsector)	**Parameter**	**Benchmark Monitoring Concentration**
Subsector C1. Agricultural Chemicals (SIC 2873-2879)	Nitrate plus Nitrite Nitrogen	0.68 mg/L
	Total Lead (freshwater)[2] Total Lead (saltwater)[1]	Hardness Dependent 0.21 mg/L
	Total Iron	1.0 mg/L
	Total Zinc (freshwater)[2] Total Zinc (saltwater)[1]	Hardness Dependent 0.09 mg/L
	Phosphorus	2.0 mg/L
Subsector C2. Industrial Inorganic Chemicals (SIC 2812-2819)	Total Aluminum	0.75 mg/L
	Total Iron	1.0 mg/L
	Nitrate plus Nitrite Nitrogen	0.68 mg/L
Subsector C3. Soaps, Detergents, Cosmetics, and Perfumes (SIC 2841-2844)	Nitrate plus Nitrite Nitrogen	0.68 mg/L
	Total Zinc (freshwater)[2] Total Zinc (saltwater)[1]	Hardness Dependent 0.09 mg/L
Subsector C4. Plastics, Synthetics, and Resins (SIC 2821-2824)	Total Zinc (freshwater)[2] Total Zinc (saltwater)[1]	Hardness Dependent 0.09 mg/L

[1]Saltwater benchmark values apply to stormwater discharges into saline waters where indicated.
[2]The freshwater benchmark values of some metals are dependent on water hardness. For these parameters, permittees must determine the hardness of the receiving water (see Appendix J, "Calculating Hardness in Receiving Waters for Hardness Dependent Metals," for methodology), in accordance with Part 6.2.1.1, to identify the applicable 'hardness range' for determining their benchmark value applicable to their facility. Hardness Dependent Benchmarks follow in the table below:

Freshwater Hardness Range	**Lead** (mg/L)	**Zinc** (mg/L)
0-24.99 mg/L	0.014	0.04
25-49.99 mg/L	0.023	0.05
50-74.99 mg/L	0.045	0.08
75-99.99 mg/L	0.069	0.11
100-124.99 mg/L	0.095	0.13
125-149.99 mg/L	0.122	0.16
150-174.99 mg/L	0.151	0.18
175-199.99 mg/L	0.182	0.20
200-224.99 mg/L	0.213	0.23
225-249.99 mg/L	0.246	0.25
250+ mg/L	0.262	0.26

8.C.4 Effluent Limitations Based on Effluent Limitations Guidelines. (See also Part 6.2.2.1)

Table 8.C-2 identifies effluent limits that apply to the industrial activities described below. Compliance with these effluent limits is to be determined based on discharges from these industrial activities independent of commingling with any other waste streams that may be covered under this permit.

Table 8.C-2[1]		
Industrial Activity	**Parameter**	**Effluent Limitation**
Runoff from phosphate fertilizer manufacturing facilities that comes into contact with any raw materials, finished product, by-products or waste products (SIC 2874)	Total Phosphorus (as P)	105.0 mg/L, daily maximum
		35 mg/L, 30-day avg.
	Fluoride	75.0 mg/L, daily maximum
		25.0 mg/L, 30-day avg.

[1] Monitor annually.

Part 8 – Sector-Specific Requirements for Industrial Activity

Subpart D – Sector D – Asphalt Paving and Roofing Materials and Lubricant Manufacturing.

You must comply with Part 8 sector-specific requirements associated with your primary industrial activity and any co-located industrial activities, as defined in Appendix A. The sector-specific requirements apply to those areas of your facility where those sector-specific activities occur. These sector-specific requirements are in addition to any requirements specified elsewhere in this permit.

8.D.1 Covered Stormwater Discharges.

The requirements in Subpart D apply to stormwater discharges associated with industrial activity from Asphalt Paving and Roofing Materials and Lubricant Manufacturing facilities, as identified by the SIC Codes specified under Sector D in Table D-1 of Appendix D of the permit.

8.D.2 Limitations on Coverage.

The following stormwater discharges associated with industrial activity are not authorized by this permit (see also Part 1.1.4):

8.D.2.1 ***Stormwater discharges from petroleum refining facilities, including those that manufacture asphalt or asphalt products, that are subject to nationally established effluent limitation guidelines found in 40 CFR Part 419 (Petroleum Refining).***

The following stormwater discharges associated with industrial activity are not authorized under Sector D:

8.D.2.2 ***Stormwater discharges from oil recycling facilities, which are covered under Sector N*** (see Part 8.N); and

8.D.2.3 ***Stormwater discharges associated with fats and oils rendering, which are covered under Sector U*** (see Part 8.U).

8.D.3 Sector-Specific Benchmarks. (See also Part 6)

Table 8.D-1 identifies benchmarks that apply to the specific subsectors of Sector D. These benchmarks apply to both your primary industrial activity and any co-located industrial activities.

Table 8.D-1.

Subsector	Parameter	Benchmark Monitoring Concentration
Subsector D1. Asphalt Paving and Roofing Materials (SIC 2951, 2952)	Total Suspended Solids (TSS)	100 mg/L

8.D.4 Effluent Limitations Based on Effluent Limitations Guidelines. (See also Part 6.2.2.1)

Table 8.D-2 identifies effluent limitations that apply to the industrial activities described below. Compliance with these effluent limitations is to be determined based on discharges from these industrial activities independent of commingling with any other waste streams that may be covered under this permit.

Table 8.D-2[1]		
Industrial Activity	**Parameter**	**Effluent Limitation**
Discharges from asphalt emulsion facilities.	Total Suspended Solids (TSS)	23.0 mg/L, daily maximum 15.0 mg/L, 30-day avg.
	pH	6.0 - 9.0 s.u.
	Oil and Grease	15.0 mg/L, daily maximum
		10 mg/L, 30-day avg.

[1]Monitor annually.

Part 8 – Sector-Specific Requirements for Industrial Activity

Subpart E – Sector E – Glass, Clay, Cement, Concrete, and Gypsum Products.

You must comply with Part 8 sector-specific requirements associated with your primary industrial activity and any co-located industrial activities, as defined in Appendix A. The sector-specific requirements apply to those areas of your facility where those sector-specific activities occur. These sector-specific requirements are in addition to any requirements specified elsewhere in this permit.

8.E.1 Covered Stormwater Discharges.

The requirements in Subpart E apply to stormwater discharges associated with industrial activity from Glass, Clay, Cement, Concrete, and Gypsum Products facilities, as identified by the SIC Codes specified under Sector E in Table D-1 of Appendix D of the permit.

8.E.2 Additional Technology-Based Effluent Limits.

8.E.2.1 ***Good Housekeeping Measures***. (See also Part 2.1.2.2) As part of your good housekeeping program, prevent or minimize the discharge of spilled cement, aggregate (including sand or gravel), kiln dust, fly ash, settled dust, or other significant material in stormwater from paved portions of the site that are exposed to stormwater. Sweep or vacuum paved surfaces of the site that are exposed to stormwater at regular intervals or use other equivalent measures (e.g., wash down the area and collect and/or treat and properly dispose of the washdown water) to minimize the potential discharge of these materials in stormwater. Indicate in your SWPPP the frequency of sweeping, vacuuming or other equivalent measures. Determine the frequency based on the amount of industrial activity occurring in the area and the frequency of precipitation, but it must be performed at least once a week in areas where cement, aggregate, kiln dust, fly ash or settled dust are being handled or processed and may be discharged in stormwater. You must also prevent the exposure of fine granular solids (e.g., cement, fly ash, kiln dust) to stormwater, where practicable, by storing these materials in enclosed silos, hoppers, buildings or under other covering.

8.E.3 Additional SWPPP Requirements.

8.E.3.1 ***Drainage Area Site Map.*** (See also Part 5.2.2) Document in the SWPPP the locations of the following, as applicable: bag house or other dust control device; recycle/ sedimentation pond, clarifier, or other device used for the treatment of process wastewater; and the areas that drain to the treatment device.

8.E.3.2 ***Discharge Testing.*** (See also Part 5.2.3.4) For facilities producing ready-mix concrete, concrete block, brick, or similar products, include in the non-stormwater discharge testing a description of measures that ensure that process wastewaters resulting from washing trucks, mixers, transport buckets, forms, or other equipment are discharged in accordance with NPDES wastewater permit requirements or are recycled.

8.E.4 Sector-Specific Benchmarks. (See also Part 6)

Table 8.E-1 identifies benchmarks that apply to the specific subsectors of Sector E. These benchmarks apply to both your primary industrial activity and any co-located industrial activities.

Table 8.E-1.		
Subsector (You may be subject to requirements for more than one sector/subsector)	**Parameter**	**Benchmark Monitoring Concentration**
Subsector E1. Clay Product Manufacturers (SIC 3251-3259, 3261-3269)	Total Aluminum	0.75 mg/L
Subsector E2. Concrete and Gypsum Product Manufacturers (SIC 3271-3275)	Total Suspended Solids (TSS)	100 mg/L
	Total Iron	1.0 mg/L

8.E.5 Effluent Limitations Based on Effluent Limitations Guidelines. (See also Part 6.2.2.1)

Table 8.E-2 identifies effluent limits that apply to the industrial activities described below. Compliance with these limits is to be determined based on discharges from these industrial activities independent of commingling with any other waste streams that may be covered under this permit.

Table 8.E-2[1]		
Industrial Activity	**Parameter**	**Effluent Limitation**
Discharges from material storage piles at cement manufacturing facilities (SIC 3241)	Total Suspended Solids (TSS)	50 mg/L, daily maximum[2]
	pH	6.0 - 9.0 s.u.[2]

[1]Monitor annually.
[2]Any untreated overflow from facilities designed, constructed and operated to treat the volume of runoff from materials storage piles which is associated with a 10-year, 24-hour rainfall event shall not be subject to the pH and TSS limitations (40 CFR 411.32(b)).

Part 8 – Sector-Specific Requirements for Industrial Activity

Subpart F – Sector F – Primary Metals.

You must comply with Part 8 sector-specific requirements associated with your primary industrial activity and any co-located industrial activities, as defined in Appendix A. The sector-specific requirements apply to those areas of your facility where those sector-specific activities occur. These sector-specific requirements are in addition to any requirements specified elsewhere in this permit.

8.F.1 Covered Stormwater Discharges.

The requirements in Subpart F apply to stormwater discharges associated with industrial activity from Primary Metals facilities, as identified by the SIC Codes specified under Sector F in Table D-1 of Appendix D of the permit.

8.F.2 Additional Technology-Based Effluent Limits.

8.F.2.1 ***Good Housekeeping Measures.*** (See also Part 2.1.2.2) As part of your good housekeeping program, you must implement a cleaning and maintenance program for all impervious areas of the facility where particulate matter, dust or debris may accumulate to minimize the discharge of pollutants in stormwater. The cleaning and maintenance program must encompass, as appropriate, areas where material loading and unloading, storage, handling and processing occur.

Stabilize unpaved areas using vegetation or paving where there is vehicle traffic or where material loading and unloading, storage, handling and processing occurs, unless feasible.

For paved areas of the facility where particulate matter, dust or debris may accumulate, to minimize the discharge of pollutants in stormwater, implement control measures such as the following, where determined to be feasible (list not exclusive): sweeping or vacuuming at regular intervals; and washing down the area and collecting and/or treating and properly disposing of the washdown water. For unstabilized areas or for stabilized areas where sweeping, vacuuming, or washing down is not possible, to minimize the discharge of particulate matter, dust, or debris or other pollutants in stormwater, implement stormwater management devices such as the following, where determined to be feasible (list not exclusive): sediment traps, vegetative buffer strips, filter fabric fence, sediment filtering boom, gravel outlet protection, and other equivalent measures that effectively trap or remove sediment.

8.F.3 Additional SWPPP Requirements.

8.F.3.1 ***Drainage Area Site Map.*** (See also Part 5.2.2) Identify in the SWPPP where any of the following activities may be exposed to precipitation or surface runoff: storage or disposal of wastes such as spent solvents and baths, sand, slag and dross; liquid storage tanks and drums; processing areas including pollution control equipment (e.g., baghouses); and storage areas of raw material such as coal, coke, scrap, sand, fluxes, refractories or metal in any form. In addition, indicate where an accumulation of significant amounts of particulate matter could occur from such sources as furnace or oven emissions, losses from coal and coke handling operations, etc., and could result in a discharge of pollutants in stormwater.

8.F.3.2 ***Inventory of Exposed Material.*** (See also Part 5.2.3) Include in the inventory of materials handled at the site that potentially may be exposed to precipitation or runoff areas where there is the potential for deposition of particulate matter from process air emissions or losses during material-handling activities.

8.F.4 Additional Inspection Requirements. (See also Part 3.1)

As part of conducting your routine facility inspections at least quarterly (Part 3.1), address all potential sources of pollutants, including (if applicable) air pollution control equipment (e.g., baghouses, electrostatic precipitators, scrubbers, cyclones), for any signs of degradation (e.g., leaks, corrosion, improper operation) that could limit their efficiency and lead to excessive emissions. Consider monitoring air flow at inlets and outlets (or use equivalent measures) to check for leaks (e.g., particulate deposition) or blockage in ducts. Also inspect all process and material handling equipment (e.g., conveyors, cranes and vehicles) for leaks, drips, or the potential loss of material; and material storage areas (e.g., piles, bins, or hoppers for storing coke, coal, scrap or slag, as well as chemicals stored in tanks and drums) for signs of material losses due to wind or stormwater runoff.

8.F.5 Sector-Specific Benchmarks. (See also Part 6)

Table 8.F-1 identifies benchmarks that apply to the specific subsectors of Sector F. These benchmarks apply to both your primary industrial activity and any co-located industrial activities.

Table 8.F-1.

Subsector (You may be subject to requirements for more than one sector/subsector)	Parameter	Benchmark Monitoring Concentration
Subsector F1. Steel Works, Blast Furnaces, and Rolling and Finishing Mills (SIC 3312-3317)	Total Aluminum	0.75 mg/L
	Total Zinc (freshwater)[2] Total Zinc (saltwater)[1]	Hardness Dependent 0.09 mg/L
Subsector F2. Iron and Steel Foundries (SIC 3321-3325)	Total Aluminum	0.75 mg/L
	Total Suspended Solids (TSS)	100 mg/L
	Total Copper (freshwater)[2] Total Copper (saltwater)[1]	Hardness Dependent 0.0048 mg/L
	Total Iron	1.0 mg/L
	Total Zinc (freshwater)[2] Total Zinc (saltwater)[1]	Hardness Dependent 0.09 mg/L
Subsector F3. Rolling, Drawing, and Extruding of Nonferrous Metals (SIC 3351-3357)	Total Copper (freshwater)[2] Total Copper (saltwater)[1]	Hardness Dependent 0.0048 mg/L
	Total Zinc (freshwater)[2] Total Zinc (saltwater)[1]	Hardness Dependent 0.09 mg/L
Subsector F4. Nonferrous Foundries (SIC 3363-3369)	Total Copper (freshwater)[2] Total Copper (saltwater)[1]	Hardness Dependent 0.0048 mg/L
	Total Zinc (freshwater)[2] Total Zinc (saltwater)[1]	Hardness Dependent 0.09 mg/L

[1]Saltwater benchmark values apply to stormwater discharges into saline waters where indicated.
[2] The freshwater benchmark values of some metals are dependent on water hardness. For these parameters, permittees must determine the hardness of the receiving water (see Appendix J, "Calculating Hardness in Receiving Waters for Hardness Dependent Metals," for methodology), in accordance with Part 6.2.1.1, to identify the applicable 'hardness range' for determining their benchmark value applicable to their facility. Hardness Dependent Benchmarks follow in the table below:

Freshwater Hardness Range	**Copper** (mg/L)	**Zinc** (mg/L)
0-24.99 mg/L	0.0038	0.04
25-49.99 mg/L	0.0056	0.05
50-74.99 mg/L	0.0090	0.08
75-99.99 mg/L	0.0123	0.11
100-124.99 mg/L	0.0156	0.13
125-149.99 mg/L	0.0189	0.16
150-174.99 mg/L	0.0221	0.18
175-199.99 mg/L	0.0253	0.20
200-224.99 mg/L	0.0285	0.23
225-249.99 mg/L	0.0316	0.25
250+ mg/L	0.0332	0.26

Part 8 – Sector-Specific Requirements for Industrial Activity

Subpart G – Sector G – Metal Mining.

You must comply with Part 8 sector-specific requirements associated with your primary industrial activity and any co-located industrial activities, as defined in Appendix A. The sector-specific requirements apply to those areas of your facility where those sector-specific activities occur. These sector-specific requirements are in addition to any requirements specified elsewhere in this permit.

Note: Where compliance with a requirement in a separate exploration permit, mining permit, reclamation plan, Surface Mining Control and Reclamation Act (SMCRA) requirements, etc. will result in you fully meeting any requirement in this Subpart, you are considered to have complied with the relevant requirement in this Subpart. You must include documentation in your SWPPP describing your rationale for concluding that any particular action on your part is sufficient to comply with the corresponding requirement in this Subpart.

8.G.1 Covered Stormwater Discharges.

The requirements in Subpart G apply to stormwater discharges associated with industrial activity from Metal Mining facilities, including mines abandoned on Federal lands, as identified by the SIC Codes specified under Sector G in Table D-1 of Appendix D. Coverage is required for metal mining facilities that discharge stormwater contaminated by contact with, or that has come into contact with, any overburden, raw material, intermediate product, finished product, byproduct, or waste product located on the site of the operation.

8.G.1.1 ***Covered Discharges from Inactive Facilities.*** All stormwater discharges.

8.G.1.2 ***Covered Discharges from Active and Temporarily Inactive Facilities.*** Only the stormwater discharges from the following areas are covered:

- Waste rock and overburden piles if composed entirely of stormwater and not combined with mine drainage;
- Topsoil piles;
- Offsite haul and access roads;
- Onsite haul and access roads constructed of waste rock, overburden or spent ore if composed entirely of stormwater and not combining with mine drainage;
- Onsite haul and access roads not constructed of waste rock, overburden or spent ore except if mine drainage is used for dust control;
- Runoff from tailings dams or dikes when not constructed of waste rock or tailings and no process fluids are present;
- Runoff from tailings dams or dikes when constructed of waste rock or tailings and no process fluids are present, if composed entirely of stormwater and not combining with mine drainage;
- Concentration building if no contact with material piles;
- Mill site if no contact with material piles;
- Office or administrative building and housing if mixed with stormwater from industrial area;
- Chemical storage area;
- Docking facility if no excessive contact with waste product that would otherwise constitute mine drainage;
- Explosive storage;
- Fuel storage;
- Vehicle and equipment maintenance area and building;
- Parking areas (if necessary);
- Power plant;

- Truck wash areas if no excessive contact with waste product that would otherwise constitute mine drainage;
- Unreclaimed, disturbed areas outside of active mining area;
- Reclaimed areas released from reclamation requirements prior to December 17, 1990;
- Partially or inadequately reclaimed areas or areas not released from reclamation requirements.

8.G.1.3 ***Covered Discharges from Earth-Disturbing Activities Conducted Prior to Active Mining Activities.*** All stormwater discharges.

8.G.1.4 ***Covered Discharges from Facilities Undergoing Reclamation***. All stormwater discharges.

8.G.2 Limitations on Coverage.

8.G.2.1 ***Prohibition of Stormwater Discharges.*** **Stormwater discharges not authorized by this permit**: discharges from active metal mining facilities that are subject to effluent limitation guidelines for the Ore Mining and Dressing Point Source Category (40 CFR Part 440).

Note: Stormwater runoff from these sources are subject to 40 CFR Part 440 if they are mixed with other discharges subject to Part 440. In this case, they are not eligible for coverage under this permit. Discharges from overburden/waste rock and overburden/waste rock-related areas are not subject to 40 CFR Part 440 unless they: (1) drain naturally (or are intentionally diverted) to a point source; and (2) combine with "mine drainage" that is otherwise regulated under the Part 440 regulations. For such sources, coverage under this permit would be available if the discharge composed entirely of stormwater does not combine with other sources of mine drainage that are not subject to 40 CFR Part 440, and meets the other eligibility criteria contained in Part 1.1 of the permit. Operators bear the initial responsibility for determining if they are eligible for coverage under this permit, or must seek coverage under another NPDES permit. EPA recommends that operators contact the relevant NPDES permit issuance authority for assistance to determine the nature and scope of the "active mining area" on a mine-by-mine basis, as well as to determine the appropriate permitting mechanism for authorizing such discharges.

8.G.2.2 ***Prohibition of Non-Stormwater Discharges***. Not authorized by this permit: adit drainage, and contaminated springs or seeps discharging from waste rock dumps that do not directly result from precipitation events (see also the standard Limitations on Coverage in Part 1.1.4). (EPA includes these prohibited non-stormwater discharges here solely as a helpful reminder to the operator that the only non-stormwater discharges authorized by this permit are at Part 1.1.3)

8.G.3 Definitions.

The following definitions are not intended to supersede the definitions of active and inactive mining facilities established by 40 CFR 122.26(b)(14)(iii).

8.G.3.1 ***Mining operations*** – For this permit, mining operations are grouped into two distinct categories, with distinct effluent limits and requirements applicable to each: a) earth-disturbing activities conducted prior to active mining activities); and b) active mining activities, which includes reclamation. "Mining operations" can occur at both inactive mining facilities and temporarily inactive mining facilities.

8.G.3.2 ***Earth-disturbing activities conducted prior to active mining activities*** – Consists of two classes of earth-disturbing (i.e., clearing, grading and excavation) activities:

a. activities performed for purposes of mine site preparation, including: cutting new rights of way (except when related to access road construction); providing access to a mine site for vehicles and equipment (except when related to access road construction); other earth disturbances associated with site preparation activities on any areas where active mining activities have not yet commenced (e.g., for heap leach pads, waste rock facilities, tailings impoundments, wastewater treatment plants); and

b. construction of staging areas to prepare for erecting structures such as to house project personnel and equipment, mill buildings, etc., and construction of access roads. Earth-disturbing activities associated with the construction of staging areas and the construction of access roads conducted prior to active mining are considered to be "construction" and have additional effluent limits in Part 8.G.4.2.

8.G.3.3 ***Active mining activities*** – Activities related to the extraction, removal or recovery, and benefication of metal ore from the earth; removal of overburden and waste rock to expose mineable minerals; and site reclamation and closure activities. All such activities occur within the "active mining area." Reclamation involves activities undertaken, in compliance with applicable mined land reclamation requirements, to return the land to an appropriate post-mining contour and land use in order to meet applicable federal and state reclamation requirements. In addition, once earth-disturbing activities conducted prior to active mining activities have ceased and all related requirements in Part 8.G.4 have been met, and a well-delineated "active mining area" has been established, all activities (including any clearing, grading, and excavation) that occur within the active mining area are "active mining activities."

8.G.3.4 ***Active mining area*** – A place where work or other activity related to the extraction, removal or recovery of metal ore is being conducted, except, with respect to surface mines, any area of land on or in which grading has been completed to return the earth to desired contour and reclamation work has begun.

Note: Earth-disturbing activities described in the definition in Part 8.G.3.2 that occur on areas outside the active mining area (e.g., for expansion of the mine into undeveloped territory) are considered "earth-disturbing conducted prior to active mining activities", and must comply with the requirements in Part 8.G.4.

8.G.3.5 ***Inactive metal mining facility*** – A site or portion of a site where metal mining and/or milling occurred in the past but there are no active mining activities occurring as defined above, and where the inactive portion is not covered by an active mining permit issued by the applicable state or federal agency. An inactive metal mining facility has an identifiable owner / operator. Sites where mining claims are being maintained prior to disturbances associated with the extraction, beneficiation, or processing of mined materials and sites where minimal activities are undertaken for the sole purpose of maintaining a mining claim are not considered either active or inactive mining facilities and do not require an NPDES industrial stormwater permit.

8.G.3.6 ***Temporarily inactive metal mining facility*** – A site or portion of a site where metal mining and/or milling occurred in the past but currently are not being actively undertaken, and the facility is covered by an active mining permit issued by the applicable state or federal agency.

8.G.4 Requirements Applicable to Earth-Disturbing Activities Conducted Prior to Active Mining Activities.

Stormwater discharges from earth-disturbing activities conducted prior to active mining activities (defined in Part 8.G.3.2) are covered under this permit. For such earth-disturbing

activities, you must comply with all applicable requirements in Parts 1-9 of the MSGP except for the technology-based effluent limits in Part 8.G.5 and Part 2.1.2, the inspection requirements in Part 8.G.7 and Part 3, and the monitoring requirements in Part 8.G.8 and Part 6.

Authorized discharges from areas where earth-disturbing activities have ceased and stabilization as specified in Part 8.G.4.1.9 or 8.G.4.2.11, where appropriate, has been completed (stabilization is not required for areas where active mining activities will occur), are no longer subject to the Part 8.G.4 requirements. At such time, authorized discharges become subject to all other applicable requirements in the MSGP, including the effluent limits in Parts 2.1.2 and 8.G.5, the inspection requirements in Parts 3 and 8.G.7, and the monitoring requirements in Parts 6 and 8.G.8.

8.G.4.1 ***Technology-Based Effluent Limits Applicable to All Earth-Disturbing Activities Conducted Prior to Active Mining Activities***. The following technology-based effluent limits apply to authorized discharges from all earth-disturbing activities conducted prior to active mining activities defined in Part 8.G.3.2(a) and 8.G.3.2(b). These limits supersede the technology-based limits listed in Part 2.1.2 and Part 8.G.5 of the MSGP.

8.G.4.1.1 ***Erosion and sediment control installation requirements.***

- By the time construction activities commence, install and make operational downgradient sediment controls, unless this timeframe is infeasible. If infeasible you must install and make such controls operational as soon as practicable or as soon as site conditions permit.
- All other stormwater controls described in the SWPPP must be installed and made operational as soon as conditions on each portion of the site allows.

8.G.4.1.2 ***Erosion and sediment control maintenance requirements.*** You must:

- Ensure that all erosion and sediment controls remain in effective operating condition.
- Wherever you determine that a stormwater control needs maintenance to continue operating effectively, initiate efforts to fix the problem immediately after its discovery, and complete such work by the end of the next work day.
- When a stormwater control must be replaced or significantly repaired, complete the work within 7 days, unless infeasible. If 7 days is infeasible, you must complete the installation or repair as soon practicable.

8.G.4.1.3 ***Perimeter controls.*** You must:

- Install sediment controls along those perimeter areas of your disturbed area that will receive stormwater, except where site conditions prevent the use of such controls (in which case, maximize their installation to the extent practicable).
- Remove sediment before it accumulates to one-half of the above-ground height of any perimeter control.

8.G.4.1.4 ***Sediment track-out.*** For construction vehicles and equipment exiting the site directly onto paved roads, you must:

- Use appropriate stabilization techniques to minimize sediment track-out from vehicles and equipment prior to exit;
- Use additional controls to remove sediment from vehicle and equipment tires prior to exit, where necessary;
- Remove sediment that is tracked out onto paved roads by end of the work day.

Note: EPA recognizes that some fine grains may remain visible on the surfaces of off-site streets, other paved areas, and sidewalks even after you have implemented sediment removal practices. Such "staining" is not a violation of Part 8.G.4.1.4.

8.G.4.1.5 ***Soil or sediment stockpiles.*** You must:

- Minimize erosion of stockpiles from stormwater and wind via temporary cover, if feasible.
- Prevent up-slope stormwater flows from causing erosion of stockpiles (e.g., by diverting flows around the stockpile).
- Minimize sediment from stormwater that runs off of stockpiles, using sediment controls (e.g., a sediment barrier or downslope sediment control).

8.G.4.1.6 ***Sediment basins.*** If you intend to install a sediment basin to treat stormwater from your earth-disturbing activities, you must:

- Provide storage for either (1) the 2-year, 24-hour storm, or (2) 3,600 cubic feet per acre drained.
- Prevent erosion of (1) basin embankments using stabilization controls (e.g., erosion control blankets), and (2) the inlet and outlet points of the basin using erosion controls and velocity dissipation devices.

8.G.4.1.7 ***Minimize dust.*** You must minimize the generation of dust through the appropriate application of water or other dust suppression techniques that minimize pollutants being discharged into surface waters.

8.G.4.1.8 ***Restrictions on use of treatment chemicals.*** If you intend to use sediment treatment chemicals at your site, you are subject to the following minimum requirements:

- Use conventional erosion and sediment controls prior to and after application of chemicals;
- Select chemicals suited to soil type, and expected turbidity, pH, flow rate;
- Minimize the discharge risk from stored chemicals;
- Comply with state/local requirements;
- Use chemicals in accordance with good engineering practices and specifications of chemical supplier;
- Ensure proper training;
- Provide proper SWPPP documentation.

If you plan to use cationic treatment chemicals (as defined in Appendix A), you are ineligible for coverage under this permit, unless you notify your applicable EPA Regional Office in advance and the EPA Regional Office authorizes coverage under this permit after you have included appropriate controls and implementation procedures designed to ensure that your use of cationic treatment chemicals will not lead to a violation of water quality standards.

8.G.4.1.9 ***Site stabilization requirements for earth-disturbing activities performed for purposes of mine site preparation as defined in 8.G.3.2(a) (i.e., not applicable to construction of staging areas for structures and access roads as defined in 8.G.3.2(b)).*** You must comply with the following stabilization requirements except where the intended function of the site accounts for such disturbed earth (e.g., the earth disturbances will become actively mined, or the controls implemented at the active mining area effectively control the disturbance)

(although you are encouraged to do so within the active mining area, where appropriate):

- *Temporary stabilization of disturbed areas.* Stabilization measures must be initiated immediately in portions of the site where earth-disturbing activities performed for purposes of mine site preparation (as defined in 8.G.3.2(a)) have temporarily ceased, but in no case more than 14 days after such activities have temporarily ceased. In arid, semi-arid, and drought-stricken areas, or in areas subject to snow or freezing conditions, where initiating perennial vegetative stabilization measures is not possible within 14 days after earth-disturbing activities performed for purposes of mine site preparation has temporarily ceased, temporary vegetative stabilization measures must be initiated as soon as practicable. Until temporary vegetative stabilization is achieved, interim measures such as erosion control blankets with an appropriate seed base and tackifiers must be employed. In areas of the site where earth-disturbing activities performed for purposes of mine site preparation have permanently ceased prior to active mining, temporary stabilization measures must be implemented to minimize mobilization of sediment or other pollutants until active mining activities commence.
- *Final stabilization of disturbed areas.* Stabilization measures must be initiated immediately where earth-disturbing activities performed for purposes of mine site preparation (as defined in 8.G.3.2(a)) have permanently ceased, but in no case more than 14 days after the earth-disturbing activities have permanently ceased. In arid, semi-arid, and drought-stricken areas, or in areas subject to snow or freezing conditions, where initiating perennial vegetative stabilization measures is not possible within 14 days after earth-disturbing activities have permanently ceased, final vegetative stabilization measures must be initiated as soon as possible. Until final stabilization is achieved, temporary stabilization measures, such as erosion control blankets with an appropriate seed base and tackifiers, must be used.

8.G.4.2 Additional Technology-Based Effluent Limits Applicable Only to the Construction of Staging Areas for Structures and Access Roads. The following technology-based effluent limits apply to authorized discharges from earth-disturbing activities associated with the construction of staging areas and the construction of access roads, as defined in Part 8.G.3.2(b). These limits supersede the technology-based limits listed in Part 2.1.2 and Part 8.G.5 of the MSGP. These limits do not apply to earth-disturbing activities performed for purposes of mine site preparation (as defined in 8.G.3.2(a)).

8.G.4.2.1 Area of disturbance. You must minimize the amount of soil exposed during construction activities.

8.G.4.2.2 Erosion and sediment control design requirements. You must:

- Design, install and maintain effective erosion and sediment controls to minimize the discharge of pollutants from construction activities. Account for the following factors in designing your erosion and sediment controls:
  - The expected amount, frequency, intensity and duration of precipitation;
  - The nature of stormwater runoff and run-on at the site, including factors such as impervious surfaces, slopes and site drainage features;
  - The range of soil particle sizes expected to be present on the site.

- Direct discharges from your stormwater controls to vegetated areas of your site to increase sediment removal and maximize stormwater infiltration, including any natural buffers, unless infeasible. Use velocity dissipation devices if necessary to prevent erosion when directing stormwater to vegetated areas.
- If any stormwater flow becomes or will be channelized at your site, you must design erosion and sediment controls to control both peak flowrates and total stormwater volume to minimize channel and streambank erosion and scour in the immediate vicinity of discharge points.
- If you install stormwater conveyance channels, they must be designed to avoid unstabilized areas on the site and to reduce erosion, unless infeasible. In addition, you must minimize erosion of channels and their embankments, outlets, adjacent streambanks, slopes, and downstream waters during discharge conditions through the use of erosion controls and velocity dissipation devices within and along the length of any constructed stormwater conveyance channel, and at any outlet to provide a non-erosive flow velocity.

8.G.4.2.3 ***Natural Buffers.*** For any stormwater discharges from construction activities within 50 feet of a water of the U.S., you must comply with one of the following compliance alternatives:

1. Provide a 50-foot undisturbed natural buffer between construction activities and the water of the U.S.; or

2. Provide an undisturbed natural buffer that is less than 50 feet supplemented by additional erosion and sediment controls, which in combination, achieve a sediment load reduction that is equivalent to a 50-foot undisturbed natural buffer; or

3. If it is infeasible to provide an undisturbed natural buffer of any size, implement erosion and sediment controls that achieve a sediment load reduction that is equivalent to a 50-foot undisturbed natural buffer.

There are exceptions when buffer requirements do not apply:
- There is no stormwater discharge from construction disturbances to a water of the U.S;
- The natural buffer has already been eliminated by preexisting development disturbances;
- The disturbance is for the construction of a water-dependent structure or construction approved under a CWA section 404 permit;
- For linear construction projects, you are not required to comply with the requirements if there are site constraints provided that, to the extent feasible, you limit disturbances within 50 feet of a water of the U.S. and/or you provide supplemental erosion and sediment controls to treat stormwater discharges from any disturbances within 50 feet of a water of the U.S.

See http://water.epa.gov/polwaste/npdes/stormwater/upload/cgp2012_appendixg.pdf for guidance on complying with these alternatives.

8.G.4.2.4 ***Soil or sediment stockpiles.*** In addition to the requirements in Part 8.G.4.1.5, you must locate any piles outside of any natural buffers established under Part 8.G.4.2.3.

8.G.4.2.5 ***Sediment basins.*** In addition to the requirements in Part 8.G.4.1.6, you must locate sediment basins outside of any surface waters and any natural buffers established under Part 8.G.4.2.3, and you must utilize outlet structures that withdraw water from the surface, unless infeasible.

8.G.4.2.6 ***Native topsoil preservation.*** You must preserve native topsoil removed during clearing, grading, or excavation, unless infeasible. Store topsoil in a manner that will maximize its use in reclamation or final vegetative stabilization (e.g., by keeping the topsoil stabilized with seed or similar measures). This requirement does not apply if the intended function of the disturbed area dictates that topsoil be disturbed or removed.

8.G.4.2.7 ***Steep slopes.*** You must minimize the disturbance of steep slopes. The permit does not prevent or prohibit disturbance on steep slopes.

Depending on site conditions and needs, disturbance on steep slopes may be necessary (e.g., a road cut in mountainous terrain; for grading steep slopes prior to erecting the mine office). Where steep slope disturbances are necessary, you can minimize the disturbances to steep slopes through the implementation of a number of standard erosion and sediment control practices, such as by phasing disturbances in these areas and using stabilization practices specifically for steep grades.

8.G.4.2.8 ***Soil compaction.*** Where final vegetative stabilization will occur or where infiltration practices will be installed, you must either restrict vehicle/ equipment use in these areas to avoid soil compaction or use soil conditioning techniques to support vegetative growth. Minimizing soil compaction is not required where compacted soil is integral to the functionality of the site.

8.G.4.2.9 ***Dewatering Practices.*** You are prohibited from discharging ground water or accumulated stormwater that is removed from excavations, trenches, foundations, vaults or other similar points of accumulation, unless such waters are first effectively managed by appropriate controls (e.g., sediment basins or sediment traps, sediment socks, dewatering tanks, tube settlers, weir tanks, or filtration systems). Uncontaminated, non-turbid dewatering water can be discharged without being routed to a control.

You must also meet the following requirements for dewatering activities:

- Discharge requirements:
  - No discharging visible floating solids or foam;
  - Remove oil, grease and other pollutants from dewatering water via an oil-water separator or suitable filtration device (such as a cartridge filter);
  - Utilize vegetated upland areas of the site, to the extent feasible, to infiltrate dewatering water before discharge. In no case shall waters of the U.S. be considered part of the treatment area;
  - Implement velocity dissipation devices at all points where dewatering water is discharged;
  - Haul backwash water away for disposal or return it to the beginning of the treatment process; and

  - Clean or replace the filter media used in dewatering devices when the pressure differential equals or exceeds the manufacturer's specifications.
- Treatment chemical restrictions: If you use polymers, flocculants or other chemicals to treat dewatering water, you must comply with the requirements in Parts 8.G.4.1.8.

8.G.4.2.10 ***Pollution prevention requirements.***

- *Prohibited discharges* (this non-exhaustive list of prohibited non-stormwater discharges is included here as a reminder that only the only allowable non-stormwater discharges are those enumerated in Part 1.1.3):
  - Wastewater from washout of concrete;
  - Wastewater from washout and cleanout of stucco, paint, form release oils, curing compounds, and other construction materials;
  - Fuels, oils, or other pollutants used for operation and maintenance of vehicles or equipment;
  - Soaps, solvents, or detergents used in vehicle or equipment washing;
  - Toxic or hazardous substances from a spill or other release.
- *Design and location requirements:* Minimize the discharge of pollutants from pollutant sources by:
  - Minimizing exposure;
  - Using secondary containment, spill kits, or other equivalent measures;
  - Locating pollution sources away from surface waters, storm sewer inlets, and drainageways;
  - Cleaning up spills immediately (do not clean by hosing area down).
- *Pollution prevention requirements for wash waters:* Minimize the discharge of pollutants from equipment and vehicle washing, wheel wash water, and other wash waters. Wash waters must be treated in a sediment basin or alternative control that provides equivalent or better treatment prior to discharge;
- *Pollution prevention requirements for the storage, handling, and disposal of construction products, materials, and wastes:* Minimize the exposure of building materials, building products, construction wastes, trash, landscape materials, fertilizers, pesticides, herbicides, detergents, sanitary waste, and other materials present on the site to stormwater. Minimization of exposure is not required in cases where the exposure to stormwater will not result in a discharge of pollutants, or where exposure of a specific material or product poses little risk of stormwater contamination (such as final products and materials intended for outdoor use).

8.G.4.2.11 ***Site Stabilization requirements for the construction of staging areas for structures and access roads as defined in 8.G.3.2(b)*** (i.e., not applicable to earth-disturbing activities performed for purposes of mine site preparation as defined in 8.G.3.2(a)). You must comply with the following stabilization requirements, except where the intended function of the site accounts for such disturbed earth (e.g., the area of construction will become actively mined, or the controls implemented at the active mining area effectively control the disturbance):

- By no later than the end of the next work day after construction work in an area has stopped permanently or temporarily ("temporarily" means the land will be idle for a period of 14 days or more but earth-disturbing activities will resume in the future), immediately initiate stabilization measures;

- If using vegetative measures, by no later than 14 days after initiating stabilization:
  - Seed or plant the area, and provide temporary cover to protect the planted area;
  - Once established, vegetation must be uniform, perennial (if final stabilization), and cover at least 70% of stabilized area based on density of native vegetation.
- If using non-vegetative stabilization, by no later than 14 days after initiating stabilization:
  - Install or apply all non-vegetative measures;
  - Cover all areas of exposed soil.

  Note: For the purposes of this permit, EPA will consider any of the following types of activities to constitute the initiation of stabilization: 1. Prepping the soil for vegetative or non-vegetative stabilization; 2. Applying mulch or other non-vegetative product to the exposed area; 3. Seeding or planting the exposed area; 4. Starting any of the activities in # 1 – 3 on a portion of the area to be stabilized, but not on the entire area; and 5. Finalizing arrangements to have stabilization product fully installed in compliance with the applicable deadline for completing stabilization.

Exceptions:

- Arid, semi-arid (if construction occurs during seasonally dry period), or drought-stricken areas:
  - Within 14 days of stopping construction work in an area, install any necessary non-vegetative stabilization measures;
  - Initiate vegetative stabilization as soon as conditions on the site allow;
  - Document the schedule that will be followed for initiating and completing vegetative stabilization;
  - Plant the area so that within 3 years the 70% cover requirement is met.
- Sites affected by severe storm events or other unforeseen circumstances:
  - Initiate vegetative stabilization as soon conditions on the site allow;
  - Document the schedule that will be followed for initiating and completing vegetative stabilization;
  - Plant the area so that so that within 3 years the 70% cover requirement is met.

8.G.4.3 *Water Quality-Based Requirements Applicable to Earth-Disturbing Activities Conducted Prior to Active Mining Activities.*

The following water quality-based limits apply to earth-disturbing activities conducted prior to active mining activities defined in Part 8.G.3.2(a) and 8.G.3.2(b), in addition to the water quality-based limits in Part 2.2 of the MSGP.

Stricter requirements apply if your site will discharge to an impaired water or a water that is identified by your state, tribe, or EPA as a Tier 2 or Tier 2.5 for antidegradation purposes:

- More rapid stabilization of exposed areas: Complete initial stabilization activities within 7 days of stopping earth-disturbing work.
- More frequent site inspections: Once every 7 days and within 24 hours of a storm event of 0.25 inches or greater.

8.G.4.4 Inspection Requirements Applicable to Earth-Disturbing Activities Conducted Prior to Active Mining Activities.

The following requirements supersede the inspection requirements in Part 3 and 8.G.7 of the MSGP for earth-disturbing activities conducted prior to active mining activities defined in Part 8.G.3.2(a) and 8.G.3.2(b).

8.G.4.4.1 Inspection frequency

- At least once every 7 calendar days, or
- Once every 14 calendar days and within 24 hours of a storm event of 0.25 inches or greater.

Note:

- Inspections only required during working hours;
- Inspections not required during unsafe conditions; and
- If you choose to inspect once every 14 days, you must have a method for measuring rainfall amount on site (either rain gauge or representative weather station)

Note: To determine if a storm event of 0.25 inches or greater has occurred on your site, you must either keep a properly maintained rain gauge on your site, or obtain the storm event information from a weather station that is representative of your location. For any day of rainfall during normal business hours that measures 0.25 inches or greater, you must record the total rainfall measured for that day.

Note: You are required to specify in your SWPPP which schedule you will be following.

Note: "Within 24 hours of the occurrence of a storm event" means that you are required to conduct an inspection within 24 hours once a storm event has produced 0.25 inches, even if the storm event is still continuing. Thus, if you have elected to inspect bi-weekly and there is a storm event at your site that continues for multiple days, and each day of the storm produces 0.25 inches or more of rain, you are required to conduct an inspection within 24 hours of the first day of the storm and within 24 hours after the end of the storm.

8.G.4.4.2 *Reductions in inspection frequency.*

- Stabilized areas: You may reduce the frequency of inspections to once per month in any area of your site where stabilization has occurred pursuant to Part 8.G.4.1.9 or 8.G.4.2.11.
- Arid, semi-arid, and drought stricken areas: If earth-disturbing activities are occurring during the seasonally dry period or during a period in which drought is predicted to occur, you may reduce inspections to once per month and within 24 hours of a 0.25 inch storm event.
- Frozen conditions: You may temporarily suspend or reduce inspections to once per month until thawing conditions occur if frozen conditions are continuous and disturbed areas have been stabilized. For extreme conditions in remote areas, e.g., where transit to the site is perilous/restricted or temperatures are routinely below freezing, you may suspend inspections until the conditions are conducive to safe access, and more frequent inspections can resume.

8.G.4.4.3 ***Areas to be inspected.*** You must at a minimum inspect the all of the following areas:

- Disturbed areas;
- Stormwater controls and pollution prevention measures;
- Locations where stabilization measures have been implemented;
- Material, waste, borrow, or equipment storage and maintenance areas;

- Areas where stormwater flows;
- Points of discharge.

8.G.4.4.4 ***What to check for during inspections***. At a minimum you must check:

- Whether all stormwater controls are installed, operational and working as intended;
- Whether any new or modified stormwater controls are needed;
- For conditions that could lead to a spill or leak;
- For visual signs of erosion/sedimentation at points of discharge.

If a discharge is occurring, check:

- The quality and characteristics of the discharge;
- Whether controls are operating effectively.

8.G.4.4.5 ***Inspection report.*** Within 24 hours of an inspection, complete a report that includes:

- Inspection date;
- Name and title of inspector(s);
- Summary of inspection findings;
- Rainfall amount that triggered the inspection (if applicable);
- If it was unsafe to inspect a portion of the site, include documentation of the reason and the location(s);
- Each inspection report must be signed;
- Keep a current copy of all reports at the site or at an easily accessible location.

8.G.5 Technology-Based Effluent Limits for Active Mining Activities.

Note: These requirements do not apply for any discharges from earth-disturbing activities conducted prior to active mining as defined in 8.G.3.2(a) or 8.G.3.2(b).

8.G.5.1 ***Employee training.*** (See also Part 2.1.2.8) Conduct employee training at least annually at active and temporarily inactive facilities.

8.G.5.2 ***Stormwater controls.*** Apart from the control measures you implement to meet your Part 2 technology-based effluent limits, where necessary to minimize pollutant discharges in stormwater, implement the following control measures at your site. The potential pollutants identified in Part 8.G.6.3 shall determine the priority and appropriateness of the control measures selected. For mines subject to dust control requirements under state or county air quality permits, provided the requirements are equivalent, compliance with such air permit dust requirements shall constitute compliance with the dust control effluent limit in Part 2.1.2.10.

Stormwater diversions: Divert stormwater away from potential pollutant sources through implementation of control measures such as the following, where determined to be feasible (list not exclusive): interceptor or diversion controls (e.g., dikes, swales, curbs, berms); pipe slope drains; subsurface drains; conveyance systems (e.g., channels or gutters, open-top box culverts, and waterbars; rolling dips and road sloping; roadway surface water deflector and culverts); or their equivalents.

Capping: When capping is necessary to minimize pollutant discharges in stormwater, identify the source being capped and the material used to construct the cap.

Treatment: If treatment of stormwater (e.g., chemical or physical systems, oil - water separators, artificial wetlands) is necessary to protect water quality, describe the type and location of treatment used. Passive and/or active treatment of stormwater runoff is encouraged, where feasible. Treated runoff may be discharged as a stormwater

source regulated under this permit provided the discharge is not combined with discharges subject to effluent limitation guidelines for the Ore Mining and Dressing Point Source Category (40 CFR Part 440).

8.G.5.3 ***Discharge testing.*** (See also Part 5.2.3.4) Test or evaluate all outfalls covered under this permit for the presence of specific mining-related but unauthorized non-stormwater discharges such as seeps or adit discharges, or discharges subject to effluent limitations guidelines (e.g., 40 CFR Part 440), such as mine drainage or process water. Alternatively (if applicable), you may keep a certification with your SWPPP consistent with Part 8.G.6.6.

8.G.6 Additional SWPPP Requirements for Mining Operations.

Note: The requirements in Part 8.G.6 are not applicable to inactive metal mining facilities.

8.G.6.1 ***Nature of industrial activities.*** (See also Part 5.2.2) Briefly document in your SWPPP the mining and associated activities that can potentially affect the stormwater discharges covered by this permit, including a general description of the location of the site relative to major transportation routes and communities.

8.G.6.2 ***Site map.*** (See also Part 5.2.2) Document in your SWPPP the locations of the following (as appropriate): mining or milling site boundaries; access and haul roads; outline of the drainage areas of each stormwater outfall within the facility with indications of the types of discharges from the drainage areas; location(s) of all permitted discharges covered under an individual NPDES permit; outdoor equipment storage, fueling, and maintenance areas; materials handling areas; outdoor manufacturing, outdoor storage, and material disposal areas; outdoor chemicals and explosives storage areas; overburden, materials, soils, or waste storage areas; location of mine drainage (where water leaves mine) or other process water; tailings piles and ponds (including proposed ones); heap leach pads; off-site points of discharge for mine drainage and process water; surface waters; boundary of tributary areas that are subject to effluent limitations guidelines; and location(s) of reclaimed areas.

8.G.6.3 ***Potential pollutant sources.*** (See also Part 5.2.3) For each area of the mine or mill site where stormwater discharges associated with industrial activities occur, identify the types of pollutants (e.g., heavy metals, sediment) likely to be present in significant amounts. Consider these factors: the mineralogy of the ore and waste rock (e.g., acid forming); toxicity and quantity of chemicals used, produced, or discharged; the likelihood of contact with stormwater; vegetation of site (if any); and history of significant leaks or spills of toxic or hazardous pollutants. Also include a summary of any existing ore or waste rock or overburden characterization data and test results for potential generation of acid rock. If any new data is acquired due to changes in ore type being mined, update your SWPPP with this information.

8.G.6.4 ***Documentation of control measures.*** Document all control measures that you implement consistent with Part 8.G.5.2. If control measures are implemented or planned but are not listed in Part 8.G.5.2 (e.g., substituting a less toxic chemical for a more toxic one), include descriptions of them in your SWPPP. If you are in compliance with dust control requirements under state or county air quality permits, you must include (or summarize, as necessary) what the state or county air quality permit dust control requirements are and how you've achieved compliance with them.

8.G.6.5 ***Employee training.*** All employee training(s) must be documented in the SWPPP.

8.G.6.6 ***Certification of permit coverage for commingled non-stormwater discharges.*** If you are able, consistent with Part 8.G.5.3 above, to certify that a particular discharge composed of commingled stormwater and non-stormwater is covered under a separate NPDES permit, and that permit subjects the non-stormwater portion to effluent limitations prior to any commingling, retain such certification with your SWPPP. This certification must identify the non-stormwater discharges, the applicable NPDES permit(s), the effluent limitations placed on the non-stormwater discharge by the permit(s), and the points at which the limitations are applied.

8.G.7 Additional Inspection Requirements. (See also Part 3.1)

Except for earth-disturbing activities conducted prior to active mining activities as defined in Part 8.G.3.2(a) and 8.G.3.2(b), which are subject to Part 8.G.4.4, inspect sites at least quarterly unless adverse weather conditions make the site inaccessible. Sites which discharge to waters designated as Tier 2 or 2.5 or waters which are impaired for sediment or nitrogen must be inspected monthly. See Part 8.G.8.4 for inspection requirements for inactive and unstaffed sites.

8.G.8 Monitoring and Reporting Requirements. (See also Part 6)
Note: There are no Part 8.G.8 monitoring and reporting or impaired waters monitoring requirements for inactive and unstaffed sites.

8.G.8.1 ***Benchmark Monitoring for Active Copper Ore Mining and Dressing Facilities***.
Table 8.G-1 identifies benchmarks that apply to active copper ore mining and dressing facilities. These benchmarks apply to both your primary industrial activity and any co-located industrial activities.

Table 8.G-1

Subsector (You may be subject to requirements for more than one sector/subsector)	Parameter	Benchmark Monitoring Concentration
Subsector G1. Active Copper Ore Mining and Dressing Facilities (SIC 1021)	Total Suspended Solids (TSS)	100 mg/L
	Nitrate plus Nitrite Nitrogen	0.68 mg/L
	Chemical Oxygen Demand (COD)	120 mg/L

8.G.8.2 ***Benchmark Monitoring Requirements for Discharges From Waste Rock and Overburden Piles at Active Metal Mining Facilities.*** For discharges from waste rock and overburden piles, perform benchmark monitoring once in the first year for the parameters listed in Table 8.G-2, and twice annually in all subsequent years of coverage under this permit for any parameters for which the benchmark has been exceeded. You are also required to conduct analytic monitoring for the parameters listed in Table 8.G-3 in accordance with the requirements in Part 8.G.8.3. The Director may also notify you that you must perform additional monitoring to accurately characterize the quality and quantity of pollutants discharged from your waste rock and overburden piles.

Table 8.G-2.		
Subsector (Discharges may be subject to requirements for more than one sector/subsector)	**Parameter**	**Benchmark Monitoring Concentration**
Subsector G2. Iron Ores; Copper Ores; Lead and Zinc Ores; Gold and Silver Ores; Ferroalloy Ores, Except Vanadium; and Miscellaneous Metal Ores (SIC Codes 1011, 1021, 1031, 1041, 1044, 1061, 1081, 1094, 1099) (Note: when analyzing hardness for a suite of metals, it is more cost effective to add analysis of calcium and magnesium, and have hardness calculated than to require hardness analysis separately)	Total Suspended Solids (TSS)	100 mg/L
	Turbidity	50 NTU
	pH	6.0-9.0 s.u.
	Hardness (as $CaCO_3$; calc. from Ca, Mg)[2]	no benchmark value
	Total Antimony	0.64 mg/L
	Total Arsenic (freshwater) Total Arsenic (saltwater)[1]	0.15 mg/L 0.069 mg/L
	Total Beryllium	0.13 mg/L
	Total Cadmium (freshwater)[2] Total Cadmium (saltwater)[1]	Hardness Dependent 0.04 mg/L
	Total Copper (freshwater)[2] Total Copper (saltwater)[1]	Hardness Dependent 0.0048 mg/L
	Total Iron	1.0 mg/L
	Total Lead (freshwater)[2] Total Lead (saltwater)[1]	Hardness Dependent 0.21 mg/L
	Total Mercury (freshwater) Total Mercury (saltwater)[1]	0.0014 mg/L 0.0018 mg/L
	Total Nickel (freshwater)[2] Total Nickel (saltwater)[1]	Hardness Dependent 0.074 mg/L
	Total Selenium (freshwater) Total Selenium (saltwater)[1]	0.005 mg/L 0.29 mg/L
	Total Silver (freshwater)[2] Total Silver (saltwater)[1]	Hardness Dependent 0.0019 mg/L
	Total Zinc (freshwater)[2] Total Zinc (saltwater)[1]	Hardness Dependent 0.09 mg/L

[1]Saltwater benchmark values apply to stormwater discharges into saline waters where indicated.
[2] The freshwater benchmark values of some metals are dependent on water hardness. For these parameters, permittees must determine the hardness of the receiving water (see Appendix J, "Calculating Hardness in Receiving Waters for Hardness Dependent Metals," for methodology), in accordance with Part 6.2.1.1, to identify the applicable 'hardness range' for determining their benchmark value applicable to their facility. Hardness Dependent Benchmarks follow in the table below:

Freshwater Hardness Range	**Cadmium** (mg/L)	**Copper** (mg/L)	**Lead** (mg/L)	**Nickel** (mg/L)	**Silver** (mg/L)	**Zinc** (mg/L)
0-24.99 mg/L	0.0005	0.0038	0.014	0.15	0.0007	0.04
25-49.99 mg/L	0.0008	0.0056	0.023	0.20	0.0007	0.05
50-74.99 mg/L	0.0013	0.0090	0.045	0.32	0.0017	0.08
75-99.99 mg/L	0.0018	0.0123	0.069	0.42	0.0030	0.11
100-124.99 mg/L	0.0023	0.0156	0.095	0.52	0.0046	0.13
125-149.99 mg/L	0.0029	0.0189	0.122	0.61	0.0065	0.16
150-174.99 mg/L	0.0034	0.0221	0.151	0.71	0.0087	0.18
175-199.99 mg/L	0.0039	0.0253	0.182	0.80	0.0112	0.20
200-224.99 mg/L	0.0045	0.0285	0.213	0.89	0.0138	0.23
225-249.99 mg/L	0.0050	0.0316	0.246	0.98	0.0168	0.25
250+ mg/L	0.0053	0.0332	0.262	1.02	0.0183	0.26

8.G.8.3 ***Additional Analytic Monitoring Requirements for Discharges From Waste Rock and Overburden Piles at Active Metal Mining Facilities.*** In addition to the monitoring required in Part 8.G.8.2 for discharges from waste rock and overburden piles, you must also conduct monitoring for additional parameters based on the type of ore you mine at your site. Where a parameter in Table 8.G-3 is the same as a pollutant you are required to monitor for in Table 8.G-2 (i.e., for all of the metals), you must use the corresponding benchmark in Table 8.G-2 and you may use any monitoring results conducted for Part 8.G.8.2 to satisfy the monitoring requirement for that parameter for Part 8.G.8.3. For radium and uranium, which do not have corresponding benchmarks in Table 8.G-2, there are no applicable benchmarks. The frequency and schedule for monitoring for these additional parameters is the same as that specified in Part 6.2.1.2.

Table 8.G-3. Additional Monitoring Requirements for Discharges from Waste Rock and Overburden Piles

Supplemental Requirements			
Type of Ore Mined	**Pollutants of Concern**		
	Total Suspended Solids (TSS)	**pH**	**Metals, Total**
Tungsten Ore	X	X	Arsenic, Cadmium (H), Copper (H), Lead (H), Zinc (H)
Nickel Ore	X	X	Arsenic, Cadmium (H), Copper (H), Lead (H), Zinc (H)
Aluminum Ore	X	X	Iron
Mercury Ore	X	X	Nickel (H)
Iron Ore	X	X	Iron (Dissolved)
Platinum Ore			Cadmium (H), Copper (H), Mercury, Lead (H), Zinc (H)
Titanium Ore	X	X	Iron, Nickel (H), Zinc (H)
Vanadium Ore	X	X	Arsenic, Cadmium (H), Copper (H), Lead (H), Zinc (H)
Molybdenum	X	X	Arsenic, Cadmium (H), Copper (H), Lead (H), Mercury, Zinc (H)
Uranium, Radium, and Vanadium Ore	X	X	Chemical Oxygen Demand, Arsenic, Radium (Dissolved and Total), Uranium, Zinc (H)

Note: An "X" indicated for TSS and/or pH means that you are required to monitor for those parameters. (H) indicates that hardness must also be measured when this pollutant is measured.

8.G.8.4 ***Inactive and Unstaffed Sites – Conditional Exemption from No Exposure Requirements for Quarterly Visual Assessments and Routine Facility Inspections.*** As a Sector G facility, if you are seeking to exercise a waiver from the quarterly visual assessment and routine facility inspection requirements for inactive and unstaffed sites (including temporarily inactive sites), you are conditionally exempt from the requirement to certify that "there are no industrial materials or activities exposed to stormwater" in Parts 3.1.1 and 3.2.3. This exemption is conditioned on the following:

- If circumstances change and your facility becomes active and/or staffed, this exception no longer applies and you must immediately begin complying with the quarterly visual assessment requirements; and
- EPA retains the authority to revoke this exemption and/or the monitoring waiver where it is determined that the discharge causes, has a reasonable potential to

cause, or contributes to an instream excursion above an applicable water quality standard, including designated uses.

Subject to the two conditions above, if your facility is inactive and unstaffed, you are waived from the requirement to conduct quarterly visual assessments and routine facility inspections. You must still do an annual site inspection in accordance with Part 3.1. You are encouraged to inspect your site more frequently where you have reason to believe that severe weather or natural disasters may have damaged control measures or increased discharges.

Table 8.G-4. Applicability of the Multi-Sector General Permit to Stormwater Runoff From Active Mining and Dressing Sites, Temporarily Inactive Sites, and Sites Undergoing Reclamation

Discharge/Source of Discharge	Note/Comment
Piles	
Waste rock/overburden	Covered under the MSGP if composed entirely of stormwater and not combined with mine drainage. See note below.
Topsoil	--
Roads constructed of waste rock or spent ore	
Onsite haul roads	Covered under the MSGP if composed entirely of stormwater and not combined with mine drainage. See note below.
Offsite haul and access roads	--
Roads not constructed of waste rock or spent ore	
Onsite haul roads	Covered under the MSGP except if mine drainage is used for dust control.
Offsite haul and access roads	--
Milling/concentrating	
Runoff from tailings dams and dikes when constructed of waste rock/tailings	Covered under the MSGP except if process fluids are present and only if composed entirely of stormwater and not combined with mine drainage. See Note below.
Runoff from tailings dams/dikes when not constructed of waste rock and tailings	Covered under the MSGP except if process fluids are present.
Concentration building	Covered under the MSGP If stormwater only and no contact with piles.
Mill site	If stormwater only and no contact with piles.
Ancillary areas	
Office and administrative building and housing	Covered under the MSGP if mixed with stormwater from the industrial area.
Chemical storage area	--
Docking facility	Covered under the MSGP except if excessive contact with waste product that would otherwise constitute mine drainage.
Explosive storage	--
Fuel storage (oil tanks/coal piles)	--
Vehicle and equipment maintenance area/building	--
Parking areas	Covered under the MSGP but coverage unnecessary if only employee and visitor-type parking.

Table 8.G-4. Applicability of the Multi-Sector General Permit to Stormwater Runoff From Active Mining and Dressing Sites, Temporarily Inactive Sites, and Sites Undergoing Reclamation	
Discharge/Source of Discharge	**Note/Comment**
Power plant	
Truck wash area	Covered under the MSGP except when excessive contact with waste product that would otherwise constitute mine drainage.
Reclamation-related areas	
Any disturbed area (unreclaimed)	Covered under the MSGP only if not in active mining area.
Reclaimed areas released from reclamation requirements prior to Dec. 17, 1990	--
Partially/inadequately reclaimed areas or areas not released from reclamation requirements	--

Note: Stormwater runoff from these sources are subject to the NPDES program for stormwater unless mixed with discharges subject to 40 CFR Part 440 that are regulated by another permit prior to mixing. Non-stormwater discharges from these sources are subject to NPDES permitting and may be subject to the effluent limitation guidelines under 40 CFR Part 440. Discharges from overburden/waste rock and overburden/waste rock-related areas are not subject to 40 CFR Part 440 unless: (1) it drains naturally (or is intentionally diverted) to a point source; and (2) combines with "mine drainage" that is otherwise regulated under the Part 440 regulations. For such sources, coverage under this permit would be available if the discharge composed entirely of stormwater does not combine with other sources of mine drainage that are not subject to 40 CFR Part 440, as well as meeting other eligibility criteria contained in Part 1.1 of the permit. Operators bear the initial responsibility for determining the applicable technology-based standard for such discharges. EPA recommends that operators contact the relevant NPDES permit issuance authority for assistance to determine the nature and scope of the "active mining area" on a mine-by-mine basis, as well as to determine the appropriate permitting mechanism for authorizing such discharges.

8.G.9. Termination of Permit Coverage

8.G.9.1 ***Termination of Permit Coverage for Sites Reclaimed After December 17, 1990.*** A site or a portion of a site that has been released from applicable state or federal reclamation requirements after December 17, 1990, is no longer required to maintain coverage under this permit. If the site or portion of a site reclaimed after December 17, 1990, was not subject to reclamation requirements, the site or portion of the site is no longer required to maintain coverage under this permit if the site or portion of the site has been reclaimed as defined in Part 8.G.3.3.

8.G.9.2 ***Termination of Permit Coverage for Sites Reclaimed Before December 17, 1990.*** A site or portion of a site that was released from applicable state or federal reclamation requirements before December 17, 1990, or that was otherwise reclaimed before December 17, 1990, is no longer required to maintain coverage under this permit if the site or portion of the site has been reclaimed. A site or portion of a site is considered to have been reclaimed if: (1) stormwater runoff that comes into contact with raw materials, intermediate byproducts, finished products, and waste products does not have the potential to cause or contribute to violations of state water quality standards, (2) soil disturbing activities related to mining at the sites or portion of the site have been completed, (3) the site or portion of the site has been stabilized to minimize soil erosion, and (4) as appropriate depending on location, size, and the potential to contribute pollutants to stormwater discharges, the site or portion of the site has been revegetated, will be amenable to natural revegetation, or will be left in a condition consistent with the post-mining land use.

Part 8 – Sector-Specific Requirements for Industrial Activity

Subpart H – Sector H – Coal Mines and Coal Mining-Related Facilities.

You must comply with Part 8 sector-specific requirements associated with your primary industrial activity and any co-located industrial activities, as defined in Appendix A. The sector-specific requirements apply to those areas of your facility where those sector-specific activities occur. These sector-specific requirements are in addition to any requirements specified elsewhere in this permit.

Note: Where compliance with a requirement in a separate exploration permit, mining permit, reclamation plan, Surface Mining Control and Reclamation Act (SMCRA) requirements, etc. will result in you fully meeting any requirement in this Subpart, you are considered to have complied with the relevant requirement in this Subpart. You must include documentation in your SWPPP describing your rationale for concluding that any particular action on your part is sufficient to comply with the corresponding requirement in this Subpart.

8.H.1 Covered Stormwater Discharges.

The requirements in Subpart H apply to stormwater discharges associated with industrial activity from Coal Mines and Coal Mining-Related facilities as identified by the SIC Codes specified under Sector H in Table D-1 of Appendix D.

8.H.2 Limitations on Coverage.

8.H.2.1 ***Prohibition of Non-Stormwater Discharges.*** (See also Part 1.1.4) Not covered by this permit: discharges from pollutant seeps or underground drainage from inactive coal mines and refuse disposal areas that do not result from precipitation events, and discharges from floor drains in maintenance buildings and other similar drains in mining and preparation plant areas. (EPA includes these prohibited non-stormwater discharges here solely as a helpful reminder to the operator that the only non-stormwater discharges authorized by this permit are at Part 1.1.3).

8.H.2.2 ***Discharges Subject to Stormwater Effluent Guidelines.*** (See also Part 1.1.2.4) Not authorized by this permit: stormwater discharges subject to an existing effluent limitation guideline at 40 CFR Part 434.

8.H.3 Definitions

The following definitions are not intended to supersede the definitions of active and inactive mining facilities established by 40 CFR 122.26(b)(14)(iii).

8.H.3.1 ***Mining operations*** - For this permit, mining operations are grouped into two distinct categories, with distinct effluent limits and requirements applicable to each: a) earth-disturbing activities conducted prior to active mining activities); and b) active mining activities, which includes reclamation. "Mining operations" can occur at both inactive mining facilities and temporarily inactive mining facilities.

8.H.3.2 ***Earth-disturbing activities conducted prior to active mining activities*** – Consists of two classes of earth-disturbing (i.e., clearing, grading and excavation) activities:

a. activities performed for purposes of mine site preparation, including: cutting new rights of way (except when related to access road construction); providing access to a mine site for vehicles and equipment (except when related to access road construction); other earth disturbances associated with site preparation activities on any areas where active mining activities have not yet commenced (e.g., for heap leach pads, waste rock facilities, tailings impoundments, wastewater treatment plants); and

b. construction of staging areas to prepare for erecting structures such as to house project personnel and equipment, mill buildings, etc., and construction of access roads. Earth-disturbing activities associated with the construction of staging areas and the construction of access roads conducted prior to active mining are considered to be "construction" and have additional effluent limits in Part 8.H.4.2.

8.H.3.3 ***Active mining activities*** *– Activities related to the extraction, removal or recovery, and preparation of coal; removal of overburden and waste rock to expose mineable minerals; and site reclamation and closure activities. All such activities occur within the "active mining area." Reclamation involves activities undertaken, in compliance with applicable mined land reclamation requirements, to return the land to an appropriate post-mining contour and land use in order to meet applicable federal and state reclamation requirements. In addition, once earth-disturbing activities conducted prior to active mining activities have ceased and all related requirements in Part 8.H.4 have been met, and a well-delineated "active mining area" has been established, all activities (including any clearing, grading, and excavation) that occur within the active mining area are "active mining activities."*

8.H.3.4 ***Active mining area*** *– A place where work or other activity related to the extraction, removal or recovery of coal is being conducted, except, with respect to surface mines, any area of land on or in which grading has been completed to return the earth to desired contour and reclamation work has begun.*

Note: Earth-disturbing activities described in the definition in Part 8.H.3.2 that occur on areas outside the active mining area (e.g., for expansion of the mine into undeveloped territory) are considered "earth-disturbing conducted prior to active mining activities", and must comply with the requirements in Part 8.H.4.

8.H.3.5 ***Inactive coal mining facility*** – A site or portion of a site where coal mining and/or milling occurred in the past but there are no active mining operations occurring as defined above, and where the inactive portion is not covered by an active mining permit issued by the applicable state or federal agency. An inactive coal mining facility has an identifiable owner / operator. Sites where mining claims are being maintained prior to disturbances associated with the extraction, beneficiation, or processing of mined materials and sites where minimal activities are undertaken for the sole purpose of maintaining a mining claim are not considered either active or inactive mining facilities and do not require an NPDES industrial stormwater permit.

8.H.3.6 ***Temporarily inactive coal mining facility*** – A site or portion of a site where coal mining and/or milling occurred in the past but currently are not being actively undertaken, and the facility is covered by an active mining permit issued by the applicable state or federal agency.

8.H.4 Requirements Applicable to Earth-Disturbing Activities Conducted Prior to Active Mining Activities.

Stormwater discharges from earth-disturbing activities conducted prior to active mining activities (defined in Part 8.H.3.2) are covered under this permit. For such earth-disturbing activities, you must comply with all applicable requirements in Parts 1-9 of the MSGP except for the technology-based effluent limits in Part 8.H.5 and Part 2.1.2, the inspection requirements in Part 8.H.7 and Part 3, and the monitoring requirements in Part 8.H.8 and Part 6.

Authorized discharges from areas where earth-disturbing activities have ceased and stabilization as specified in Part 8.H.4.19 or 8.H.4.2.11, where appropriate, has been completed (stabilization is not required for areas where active mining activities will occur), are no longer subject to the Part 8.H.4 requirements. At such time, authorized discharges become subject to all

other applicable requirements in the MSGP, including the effluent limits in Parts 2.1.2 and 8.H.5, the inspection requirements in Parts 3 and 8.H.7, and the monitoring requirements in Parts 6 and 8.H.8.

8.H.4.1 Technology-Based Effluent Limits Applicable to All Earth-Disturbing Activities Conducted Prior to Active Mining Activities. The following technology-based effluent limits apply to authorized discharges from all earth-disturbing activities conducted prior to active mining activities defined in Part 8.H.3.2(a) and 8.H.3.2(b). These limits supersede the technology-based limits listed in Part 2.1.2 and Part 8.H.5 of the MSGP.

8.H.4.1.1 ***Erosion and sediment control installation requirements.***

- By the time construction activities commence, install and make operational downgradient sediment controls, unless this timeframe is infeasible. If infeasible you must install and make such controls operational as soon as practicable or as soon as site conditions permit.
- All other stormwater controls described in the SWPPP must be installed and made operational as soon as conditions on each portion of the site allows.

8.H.4.1.2 ***Erosion and sediment control maintenance requirements***. You must:

- Ensure that all erosion and sediment controls remain in effective operating condition.
- Wherever you determine that a stormwater control needs maintenance to continue operating effectively, initiate efforts to fix the problem immediately after its discovery, and complete such work by the end of the next work day.
- When a stormwater control must be replaced or significantly repaired, complete the work within 7 days, unless infeasible. If 7 days is infeasible, you must complete the installation or repair as soon practicable.

8.H.4.1.3 ***Perimeter controls***. You must:

- Install sediment controls along those perimeter areas of your disturbed area that will receive stormwater, except where site conditions prevent the use of such controls (in which case, maximize their installation to the extent practicable).
- Remove sediment before it accumulates to one-half of the above-ground height of any perimeter control.

8.H.4.1.4 ***Sediment track-out***. For construction vehicles and equipment exiting the site directly onto paved roads, you must:

- Use appropriate stabilization techniques to minimize sediment track-out from vehicles and equipment prior to exit;
- Use additional controls to remove sediment from vehicle and equipment tires prior to exit, where necessary;
- Remove sediment that is tracked out onto paved roads by end of the work day.

Note: EPA recognizes that some fine grains may remain visible on the surfaces of off-site streets, other paved areas, and sidewalks even after you have implemented sediment removal practices. Such "staining" is not a violation of Part 8.H.4.1.4.

8.H.4.1.5 ***Soil or sediment stockpiles***. You must:

- Minimize erosion of stockpiles from stormwater and wind via temporary cover, if feasible.

- Prevent up-slope stormwater flows from causing erosion of stockpiles (e.g., by diverting flows around the stockpile).
- Minimize sediment from stormwater that runs off of stockpiles, using sediment controls (e.g., a sediment barrier or downslope sediment control).

8.H.4.1.6 ***Sediment basins***. If you intend to install a sediment basin to treat stormwater from your earth-disturbing activities, you must:

- Provide storage for either (1) the 2-year, 24-hour storm, or (2) 3,600 cubic feet per acre drained.
- Prevent erosion of (1) basin embankments using stabilization controls (e.g., erosion control blankets), and (2) the inlet and outlet points of the basin using erosion controls and velocity dissipation devices.

8.H.4.1.7 ***Minimize dust.*** You must minimize the generation of dust through the appropriate application of water or other dust suppression techniques that minimize pollutants being discharged into surface waters.

8.H.4.1.8 ***Restrictions on use of treatment chemicals.*** If you intend to use sediment treatment chemicals at your site, you are subject to the following minimum requirements:

- Use conventional erosion and sediment controls prior to and after application of chemicals;
- Select chemicals suited to soil type, and expected turbidity, pH, flow rate;
- Minimize the discharge risk from stored chemicals;
- Comply with state/local requirements;
- Use chemicals in accordance with good engineering practices and specifications of chemical supplier;
- Ensure proper training;
- Provide proper SWPPP documentation.

If you plan to use cationic treatment chemicals (as defined in Appendix A), you are ineligible for coverage under this permit, unless you notify your applicable EPA Regional Office in advance and the EPA Regional Office authorizes coverage under this permit after you have included appropriate controls and implementation procedures designed to ensure that your use of cationic treatment chemicals will not lead to a violation of water quality standards.

8.H.4.1.9 ***Site stabilization requirements for earth-disturbing activities performed for purposes of mine site preparation as defined in 8.H.3.2(a)*** (i.e., not applicable to construction of staging areas for structures and access roads as defined in 8.H.3.2(b)). You must comply with the following stabilization requirements except where the intended function of the site accounts for such disturbed earth (e.g., the earth disturbances will become actively mined, or the controls implemented at the active mining area effectively control the disturbance):

- *Temporary stabilization of disturbed areas.* Stabilization measures must be initiated immediately in portions of the site where earth-disturbing activities performed for purposes of mine site preparation (as defined in 8.H.3.2(a)) have temporarily ceased, but in no case more than 14 days after such activities have temporarily ceased. In arid, semi-arid, and drought-stricken areas, or in areas subject to snow or freezing conditions, where initiating perennial vegetative stabilization measures is not possible within 14 days after earth-disturbing activities performed for purposes of mine site preparation has temporarily ceased, temporary vegetative

stabilization measures must be initiated as soon as practicable. Until temporary vegetative stabilization is achieved, interim measures such as erosion control blankets with an appropriate seed base and tackifiers must be employed. In areas of the site where earth-disturbing activities performed for purposes of mine site preparation have permanently ceased prior to active mining, temporary stabilization measures must be implemented to minimize mobilization of sediment or other pollutants until active mining activities commence.

- *Final stabilization of disturbed areas.* Stabilization measures must be initiated immediately where earth-disturbing activities performed for purposes of mine site preparation (as defined in 8.H.3.2(a)) have permanently ceased, but in no case more than 14 days after the earth-disturbing activities have permanently ceased. In arid, semi-arid, and drought-stricken areas, or in areas subject to snow or freezing conditions, where initiating perennial vegetative stabilization measures is not possible within 14 days after earth-disturbing activities have permanently ceased, final vegetative stabilization measures must be initiated as soon as possible. Until final stabilization is achieved, temporary stabilization measures, such as erosion control blankets with an appropriate seed base and tackifiers, must be used.

8.H.4.2 ***Additional Technology-Based Effluent Limits Applicable Only to the Construction of Staging Areas for Structures and Access Roads.*** The following technology-based effluent limits apply to authorized discharges from earth-disturbing activities associated with the construction of staging areas and the construction of access roads, as defined in Part 8.H.3.2(b). These limits supersede the technology-based limits listed in Part 2.1.2 and Part 8.H.5 of the MSGP. These limits do not apply to earth-disturbing activities performed for purposes of mine site preparation (as defined in 8.H.3.2(a)).

8.H.4.2.1 ***Area of disturbance***. You must minimize the amount of soil exposed during construction activities.

8.H.4.2.2 ***Erosion and sediment control design requirements.*** You must:

- Design, install and maintain effective erosion and sediment controls to minimize the discharge of pollutants from construction activities. Account for the following factors in designing your erosion and sediment controls:
  - The expected amount, frequency, intensity and duration of precipitation;
  - The nature of stormwater runoff and run-on at the site, including factors such as impervious surfaces, slopes and site drainage features;
  - The range of soil particle sizes expected to be present on the site.
- Direct discharges from your stormwater controls to vegetated areas of your site to increase sediment removal and maximize stormwater infiltration, including any natural buffers, unless infeasible. Use velocity dissipation devices if necessary to prevent erosion when directing stormwater to vegetated areas.
- If any stormwater flow becomes or will be channelized at your site, you must design erosion and sediment controls to control both peak flowrates and total stormwater volume to minimize channel and streambank erosion and scour in the immediate vicinity of discharge points.
- If you install stormwater conveyance channels, they must be designed to avoid unstabilized areas on the site and to reduce erosion, unless infeasible. In addition, you must minimize erosion of channels and their embankments, outlets, adjacent streambanks, slopes, and downstream

waters during discharge conditions through the use of erosion controls and velocity dissipation devices within and along the length of any constructed stormwater conveyance channel, and at any outlet to provide a non-erosive flow velocity.

8.H.4.2.3 ***Natural Buffers.*** For any stormwater discharges from construction activities within 50 feet of a water of the U.S., you must comply with one of the following compliance alternatives:

1. Provide a 50-foot undisturbed natural buffer between construction activities and the water of the U.S.; or
2. Provide an undisturbed natural buffer that is less than 50 feet supplemented by additional erosion and sediment controls, which in combination, achieve a sediment load reduction that is equivalent to a 50-foot undisturbed natural buffer; or
3. If it is infeasible to provide an undisturbed natural buffer of any size, implement erosion and sediment controls that achieve a sediment load reduction that is equivalent to a 50-foot undisturbed natural buffer.

There are exceptions when buffer requirements do not apply:

- There is no stormwater discharge from construction disturbances to a water of the U.S;
- The natural buffer has already been eliminated by preexisting development disturbances;
- The disturbance is for the construction of a water-dependent structure or construction approved under a CWA section 404 permit;
- For linear construction projects, you are not required to comply with the requirements if there are site constraints provided that, to the extent feasible, you limit disturbances within 50 feet of a water of the U.S. and/or you provide supplemental erosion and sediment controls to treat stormwater discharges from any disturbances within 50 feet of a water of the U.S.

See http://water.epa.gov/polwaste/npdes/stormwater/upload/cgp2012_appendixg.pdf for guidance on complying with these alternatives.

8.H.4.2.4 ***Soil or sediment stockpiles.*** In addition to the requirements in Part 8.H.4.1.5, you must locate any piles outside of any natural buffers established under Part 8.H.4.2.3.

8.H.4.2.5 ***Sediment basins.*** In addition to the requirements in Part 8.H.4.1.6, you must locate sediment basins outside of any surface waters and any natural buffers established under Part 8.H.4.2.3, and you must utilize outlet structures that withdraw water from the surface, unless infeasible.

8.H.4.2.6 ***Native topsoil preservation.*** You must preserve native topsoil removed during clearing, grading, or excavation, unless infeasible. Store topsoil in a manner that will maximize its use in reclamation or final vegetative stabilization (e.g., by keeping the topsoil stabilized with seed or similar measures). This requirement does not apply if the intended function of the disturbed area dictates that topsoil be disturbed or removed.

8.H.4.2.7 ***Steep slopes.*** You must minimize the disturbance of steep slopes. The permit does not prevent or prohibit disturbance on steep slopes.

Depending on site conditions and needs, disturbance on steep slopes may be necessary (e.g., a road cut in mountainous terrain; for grading steep slopes prior to erecting the mine office). Where steep slope disturbances are necessary, you can minimize the disturbances to steep slopes through the implementation of a number of standard erosion and sediment control practices, such as by phasing disturbances in these areas and using stabilization practices specifically for steep grades.

8.H.4.2.8 ***Soil compaction.*** Where final vegetative stabilization will occur or where infiltration practices will be installed, you must either restrict vehicle/ equipment use in these areas to avoid soil compaction or use soil conditioning techniques to support vegetative growth. Minimizing soil compaction is not required where compacted soil is integral to the functionality of the site.

8.H.4.2.9 ***Dewatering Practices.*** You are prohibited from discharging ground water or accumulated stormwater that is removed from excavations, trenches, foundations, vaults or other similar points of accumulation, unless such waters are first effectively managed by appropriate controls (e.g., sediment basins or sediment traps, sediment socks, dewatering tanks, tube settlers, weir tanks, or filtration systems). Uncontaminated, non-turbid dewatering water can be discharged without being routed to a control.

You must also meet the following requirements for dewatering activities:

- Discharge requirements:
  - No discharging visible floating solids or foam;
  - Remove oil, grease and other pollutants from dewatering water via an oil-water separator or suitable filtration device (such as a cartridge filter);
  - Utilize vegetated upland areas of the site, to the extent feasible, to infiltrate dewatering water before discharge. In no case shall waters of the U.S. be considered part of the treatment area;
  - Implement velocity dissipation devices at all points where dewatering water is discharged;
  - Haul backwash water away for disposal or return it to the beginning of the treatment process; and
  - Clean or replace the filter media used in dewatering devices when the pressure differential equals or exceeds the manufacturer's specifications.
- Treatment chemical restrictions: If you use polymers, flocculants or other chemicals to treat dewatering water, you must comply with the requirements in Parts 8.H.4.1.8.

8.H.4.2.10 ***Pollution prevention requirements.***

- *Prohibited discharges* (this non-exhaustive list of prohibited non-stormwater discharges is included here as a reminder that only the only allowable non-stormwater discharges are those enumerated in Part 1.1.3):
  - Wastewater from washout of concrete;
  - Wastewater from washout and cleanout of stucco, paint, form release oils, curing compounds, and other construction materials;
  - Fuels, oils, or other pollutants used for operation and maintenance of vehicles or equipment;

  - Soaps, solvents, or detergents used in vehicle or equipment washing;
  - Toxic or hazardous substances from a spill or other release.
- *Design and location requirements:* Minimize the discharge of pollutants from pollutant sources by:
  - Minimizing exposure;
  - Using secondary containment, spill kits, or other equivalent measures;
  - Locating pollution sources away from surface waters, storm sewer inlets, and drainageways;
  - Cleaning up spills immediately (do not clean by hosing area down).
- *Pollution prevention requirements for wash waters:* Minimize the discharge of pollutants from equipment and vehicle washing, wheel wash water, and other wash waters. Wash waters must be treated in a sediment basin or alternative control that provides equivalent or better treatment prior to discharge;
- *Pollution prevention requirements for the storage, handling, and disposal of construction products, materials, and wastes:* Minimize the exposure of building materials, building products, construction wastes, trash, landscape materials, fertilizers, pesticides, herbicides, detergents, sanitary waste, and other materials present on the site to stormwater. Minimization of exposure is not required in cases where the exposure to stormwater will not result in a discharge of pollutants, or where exposure of a specific material or product poses little risk of stormwater contamination (such as final products and materials intended for outdoor use).

8.H.4.2.11 ***Site Stabilization requirements for the construction of staging areas for structures and access roads as defined in 8.H.3.2(b)*** *(i.e., not applicable to earth-disturbing activities performed for purposes of mine site preparation as defined in 8.H.3.2(a))*. You must comply with the following stabilization requirements, except where the intended function of the site accounts for such disturbed earth (e.g., the area of construction will become actively mined, or the controls implemented at the active mining area effectively control the disturbance):

- By no later than the end of the next work day after construction work in an area has stopped permanently or temporarily ("temporarily" means the land will be idle for a period of 14 days or more but earth-disturbing activities will resume in the future), immediately initiate stabilization measures;
- If using vegetative measures, by no later than 14 days after initiating stabilization:
  - Seed or plant the area, and provide temporary cover to protect the planted area;
  - Once established, vegetation must be uniform, perennial (if final stabilization), and cover at least 70% of stabilized area based on density of native vegetation.
- If using non-vegetative stabilization, by no later than 14 days after initiating stabilization:
  - Install or apply all non-vegetative measures;
  - Cover all areas of exposed soil.

Note: For the purposes of this permit, EPA will consider any of the following types of activities to constitute the initiation of stabilization: 1. Prepping the soil for vegetative or non-vegetative stabilization; 2. Applying mulch or other non-vegetative product to the exposed area; 3. Seeding or planting

the exposed area; 4. Starting any of the activities in # 1 – 3 on a portion of the area to be stabilized, but not on the entire area; and 5. Finalizing arrangements to have stabilization product fully installed in compliance with the applicable deadline for completing stabilization.

Exceptions:

- Arid, semi-arid (if construction occurs during seasonally dry period), or drought-stricken areas:
  - Within 14 days of stopping construction work in an area, install any necessary non-vegetative stabilization measures;
  - Initiate vegetative stabilization as soon as conditions on the site allow;
  - Document the schedule that will be followed for initiating and completing vegetative stabilization;
  - Plant the area so that within 3 years the 70% cover requirement is met.
- Sites affected by severe storm events or other unforeseen circumstances:
  - Initiate vegetative stabilization as soon conditions on the site allow;
  - Document the schedule that will be followed for initiating and completing vegetative stabilization;
  - Plant the area so that so that within 3 years the 70% cover requirement is met.

8.H.4.3 *Water Quality-Based Requirements Applicable to Earth-Disturbing Activities Conducted Prior to Active Mining Activities.*

The following water quality-based limits apply to earth-disturbing activities conducted prior to active mining activities defined in Part 8.H.3.2(a) and 8.H.3.2(b), in addition to the water quality-based limits in Part 2.2 of the MSGP.

Stricter requirements apply if your site will discharge to an impaired water or a water that is identified by your state, tribe, or EPA as a Tier 2 or Tier 2.5 for antidegradation purposes:

- More rapid stabilization of exposed areas: Complete initial stabilization activities within 7 days of stopping earth-disturbing work.
- More frequent site inspections: Once every 7 days and within 24 hours of a storm event of 0.25 inches or greater.

8.H.4.4 *Inspection Requirements Applicable to Earth-Disturbing Activities Conducted Prior to Active Mining Activities.*

The following requirements supersede the inspections requirements in Part 3 and 8.H.7 of the MSGP for earth-disturbing activities conducted prior to active mining activities defined in Part 8.H.3.2(a) and 8.H.3.2(b).

8.H.4.4.1 *Inspection Frequency*

- At least once every 7 calendar days, or
- Once every 14 calendar days and within 24 hours of a storm event of 0.25 inches or greater.

Note:

- Inspections only required during working hours;
- Inspections not required during unsafe conditions; and
- If you choose to inspect once every 14 days, you must have a method for measuring rainfall amount on site (either rain gauge or representative weather station)

Note: To determine if a storm event of 0.25 inches or greater has occurred on your site, you must either keep a properly maintained rain gauge on your site, or obtain the storm event information from a weather station that is representative of your location. For any

day of rainfall during normal business hours that measures 0.25 inches or greater, you must record the total rainfall measured for that.

Note: You are required to specify in your SWPPP which schedule you will be following.

Note: "Within 24 hours of the occurrence of a storm event" means that you are required to conduct an inspection within 24 hours once a storm event has produced 0.25 inches, even if the storm event is still continuing. Thus, if you have elected to inspect bi-weekly in and there is a storm event at your site that continues for multiple days, and each day of the storm produces 0.25 inches or more of rain, you are required to conduct an inspection within 24 hours of the first day of the storm and within 24 hours after the end of the storm.

8.H.4.4.2 ***Reductions in Inspection Frequency***

- Stabilized areas: You may reduce the frequency of inspections to once per month in any area of your site where stabilization has occurred pursuant to Part 8.H.4.1.9 or 8.H.4.2.11.
- Arid, semi-arid, and drought stricken areas: If earth-disturbing activities are occurring during the seasonally dry period or during a period in which drought is predicted to occur, you may reduce inspections to once per month and within 24 hours of a 0.25 inch storm event.
- Frozen conditions: You may temporarily suspend or reduce inspections to once per month until thawing conditions occur if frozen conditions are continuous and disturbed areas have been stabilized. For extreme conditions in remote areas, e.g., where transit to the site is perilous/restricted or temperatures are routinely below freezing, you may suspend inspections until the conditions are conducive to safe access, and more frequent inspections can resume.

8.H.4.4.3 ***Areas to be Inspected***. You must at a minimum inspect the following areas:

- Disturbed areas;
- Stormwater controls and pollution prevention measures;
- Locations where stabilization measures have been implemented;
- Material, waste, borrow, or equipment storage and maintenance areas;
- Areas where stormwater flows;
- Points of discharge.

8.H.4.4.4 ***What to Check for During Inspections.*** At a minimum you must check:

- Whether all stormwater controls are installed, operational, and working as intended;
- Whether any new or modified stormwater controls are needed;
- For conditions that could lead to a spill or leak;
- For visual signs of erosion/sedimentation at points of discharge.

If a discharge is occurring:

- The quality and characteristics of the discharge;
- Whether controls are operating effectively.

8.H.4.4.5 ***Inspection Report***. Within 24 hours of an inspection, complete a report that includes:

- Inspection date;
- Name and title of inspector(s);
- Summary of inspection findings;
- Rainfall amount that triggered the inspection (if applicable);
- If it was unsafe to inspect a portion of the site, include documentation of the reason and the location(s);

- Each inspection report must be signed;
- Keep a current copy of all reports at the site or at an easily accessible location.

8.H.4.5 ***Cessation of Requirements Applicable to Earth-Disturbing Activities Conducted Prior to Active Mining Activities.*** The requirements in 8.H.4 no longer apply for any earth-disturbing activities conducted prior to active mining activities as defined in 8.H.3.2(a) or 8.H.3.2(b) where:

1. Earth-disturbing activities have ceased; and
2. Stabilization has been met consistent with Part 8.H.4.1.9 or 8.H.4.2.11 (not required for areas where active mining activities will occur).

8.H.5 Technology-Based Effluent Limits for Active Mining Activities.

Note: These requirements do not apply for any discharges from earth-disturbing activities conducted prior to active mining as defined in 8.H.3.2(a) or 8.H.3.2(b).

8.H.5.1 ***Good Housekeeping Measures***. (See also Part 2.1.2.2) As part of your good housekeeping program, in order to minimize discharges of pollutants in stormwater, implement control measures such as the following, where determined to be feasible (list not inclusive): using sweepers and covered storage; watering haul roads to minimize dust generation; and conserving vegetation to minimize erosion. For mines subject to dust control requirements under state or county air quality permits, provided the requirements are equivalent, compliance with such air permit dust requirements shall constitute compliance with the dust control effluent limit in Part 2.1.2.10.

8.H.5.2 ***Preventive Maintenance***. (See also Part 2.1.2.3) Perform inspections or other equivalent measures of storage tanks and pressure lines of fuels, lubricants, hydraulic fluid, and slurry to prevent leaks due to deterioration or faulty connections.

8.H.6 Additional SWPPP Requirements for Mining Operations.

Note: The requirements in Part 8.H.6 are not applicable to inactive coal mining facilities.

8.H.6.1 ***Other Applicable Regulations***. Most active coal mining-related areas (SIC Codes 1221-1241) are subject to sediment and erosion control regulations of the U.S. Office of Surface Mining (OSM) that enforces the Surface Mining Control and Reclamation Act (SMCRA). OSM has granted authority to most coal-producing states to implement SMCRA through State SMCRA regulations. All SMCRA requirements regarding control of stormwater-related pollutant discharges must be addressed and then documented with the SWPPP (directly or by reference).

8.H.6.2 ***Site Map***. (See also Part 5.2.2) Document in your SWPPP where any of the following may be exposed to precipitation or surface runoff: haul and access roads; railroad spurs, sliding, and internal hauling lines; conveyor belts, chutes, and aerial tramways; equipment storage and maintenance yards; coal handling buildings and structures; inactive mines and related areas; acidic spoil, refuse, or unreclaimed disturbed areas; and liquid storage tanks containing pollutants such as caustics, hydraulic fluids, and lubricants.

8.H.6.3 ***Potential Pollutant Sources***. (See also Part 5.2.3) Document in your SWPPP the following sources and activities that have potential pollutants associated with them: truck traffic on haul roads and resulting generation of sediment subject to runoff and dust generation; fuel or other liquid storage; pressure lines containing slurry, hydraulic fluid, or other potential harmful liquids; and loading or temporary storage of acidic refuse or spoil.

8.H.6.4 If you are in compliance with dust control requirements under state or county air quality permits, you must include (or summarize, as necessary) what the state or county air quality permit dust control requirements are and how you've achieved compliance with them.

8.H.7 Additional Inspection Requirements. (See also Part 3.1)

8.H.7.1 ***Inspections of Active Mining-Related Areas.*** (See also Part 3) Except for earth-disturbing activities conducted prior to active mining activities as defined in Part 8.H.3.2(a) and 8.H.3.2(b), which are subject to Part 8.H.4.4, perform routine inspections of active mining areas covered by this permit, corresponding with the inspections as performed by SMCRA inspectors, of all mining-related areas required by SMCRA. Also maintain the records of the SMCRA authority representative. See Part 8.H.8.1 for inspection requirements for inactive and unstaffed sties.

8.H.7.2 ***Sediment and Erosion Control.*** (See also Part 2.1.2.5) As indicated in Part 8.H.6.1, SMCRA requirements regarding sediment and erosion control measures must be complied with for those areas subject to SMCRA authority, including inspection requirements.

8.H.7.3 ***Routine Site Inspections.*** (See also Part 3.1) Your inspection program must include inspections for pollutants entering the drainage system from activities located on or near coal mining-related areas. Among the areas to be inspected are haul and access roads; railroad spurs, sliding, and internal hauling lines; conveyor belts, chutes, and aerial tramways; equipment storage and maintenance yards; coal handling buildings and structures; and inactive mines and related areas.

8.H.8 Sector-Specific Benchmarks. (See also Part 6)

Table 8.H-1 identifies benchmarks that apply to the specific subsectors of Sector H. These benchmarks apply to both your primary industrial activity and any co-located industrial activities. Note: There are no Part 8.H. 8 monitoring and reporting or impaired waters monitoring requirements for inactive and unstaffed sites.

Table 8.H-1.

Subsector (You may be subject to requirements for more than one sector/subsector)	Parameter	Benchmark Monitoring Concentration
Subsector H1. Coal Mines and Related Areas (SIC 1221-1241)	Total Aluminum	0.75 mg/L
	Total Iron	1.0 mg/L
	Total Suspended Solids (TSS)	100 mg/L

8.H.8.1 ***Inactive and Unstaffed Sites – Conditional Exemption from No Exposure Requirement for Routine Inspections, Quarterly Visual Assessments, and Benchmark and Impaired Waters Monitoring.*** As a Sector H facility, if you are seeking to exercise a waiver from either the quarterly visual assessment or the benchmark and/or impaired waters monitoring requirements for inactive and unstaffed sites (including temporarily inactive sites), you are conditionally exempt from the requirement to certify that "there are no industrial materials or activities exposed to stormwater" in Parts 3.2.3, 6.2.1.3, and 6.2.4.2. Additionally, if you are seeking to reduce your required routine inspection frequency, as is allowed under Part 3.1.1, you are also conditionally exempt from the requirement to certify that "there are no industrial materials or activities exposed to stormwater." These conditional exemptions are based on the following requirements:

- If circumstances change and your facility becomes active and/or staffed, this exception no longer applies and you must immediately begin complying with the applicable benchmark monitoring requirements as if you were in your first year of permit coverage, and the quarterly visual assessment requirements; and
- EPA retains the authority to revoke this exemption and/or the monitoring waiver where it is determined that the discharge causes, has a reasonable potential to cause or contribute to an instream excursion above an applicable water quality standard, including designated uses.

Subject to the two conditions above, if your facility is inactive and unstaffed, you are waived from the requirement to conduct routine facility inspections, quarterly visual assessments, and benchmark and impaired waters monitoring. You must still conduct an annual site inspection in accordance with Part 3.1. You are encouraged to inspect your site more frequently where you have reason to believe that severe weather or natural disasters may have damaged control measures or increased discharges.

8.H.9 Termination of Permit Coverage

8.H.9.1 ***Termination of Permit Coverage for Sites Reclaimed After December 17, 1990***. A site or a portion of a site that has been released from applicable state or federal reclamation requirements after December 17, 1990, is no longer required to maintain coverage under this permit. If the site or portion of a site reclaimed after December 17, 1990, was not subject to reclamation requirements, the site or portion of the site is no longer required to maintain coverage under this permit if the site or portion of the site has been reclaimed as defined in Part 8.H.3.5.

8.H.9.2 ***Termination of Permit Coverage for Sites Reclaimed Before December 17, 1990***. A site or portion of a site that was released from applicable state or federal reclamation requirements before December 17, 1990, or that was otherwise reclaimed before December 17, 1990, is no longer required to maintain coverage under this permit if the site or portion of the site has been reclaimed. A site or portion of a site is considered to have been reclaimed if: (1) stormwater runoff that comes into contact with raw materials, intermediate byproducts, finished products, and waste products does not have the potential to cause or contribute to violations of state water quality standards, (2) soil disturbing activities related to mining at the sites or portion of the site have been completed, (3) the site or portion of the site has been stabilized to minimize soil erosion, and (4) as appropriate depending on location, size, and the potential to contribute pollutants to stormwater discharges, the site or portion of the site has been revegetated, will be amenable to natural revegetation, or will be left in a condition consistent with the post-mining land use.

Part 8 – Sector-Specific Requirements for Industrial Activity

Subpart I – Sector I – Oil and Gas Extraction.

You must comply with Part 8 sector-specific requirements associated with your primary industrial activity and any co-located industrial activities, as defined in Appendix A. The sector-specific requirements apply to those areas of your facility where those sector-specific activities occur. These sector-specific requirements are in addition to any requirements specified elsewhere in this permit.

8.I.1 Covered Stormwater Discharges.

The requirements in Subpart I apply to stormwater discharges associated with industrial activity from Oil and Gas Extraction facilities as identified by the SIC Codes specified under Sector I in Table D-1 of Appendix D of the permit.

8.I.1.1 ***Discharges of stormwater runoff from field activities or operations associated with oil and gas exploration, production, processing, or treatment operations or transmission facilities are exempt from NPDES permit coverage unless, in accordance with 40 CFR 122.26(c)(1)(iii), the facility:***

- Has had a discharge of stormwater resulting in the discharge of a reportable quantity for which notification is or was required pursuant to 40 CFR 117.21 or 40 CFR 302.6 at any time since November 16, 1987; or
- Has had a discharge of stormwater resulting in the discharge of a reportable quantity for which notification is or was required pursuant to 40 CFR 110.6 at any time since November 16, 1987; or
- Contributes to a violation of a water quality standard.

Any stormwater discharges that require permit coverage as a result of meeting one of the conditions of 122.26(c)(1)(iii) may be covered under this permit unless otherwise required to obtain coverage under an alternative NPDES general permit or an individual NPDES permit as specified in Part 1.6.1.

8.I.2 Limitations on Coverage.

8.I.2.1 ***Stormwater Discharges Subject to Effluent Limitation Guidelines.*** (See also Part 1.1.4.5) This permit does not authorize stormwater discharges from petroleum drilling operations that are subject to nationally established effluent limitation guidelines found at 40 CFR Part 435, respectively.

8.I.2.2 ***Non-Stormwater Discharges.*** Discharges of vehicle and equipment wash water, including tank cleaning operations, are not authorized by this permit. Alternatively, wash water discharges must be authorized under a separate NPDES permit, or be discharged to a sanitary sewer in accordance with applicable industrial pretreatment requirements. (EPA includes this prohibited non-stormwater discharge here solely as a helpful reminder to the operator that the only non-stormwater discharges authorized by this permit are at Part 1.1.3).

8.I.3 Additional Technology-Based Effluent Limits.

8.I.3.1 ***Vegetative Controls.*** Implement vegetative practices designed to preserve existing vegetation, where attainable, and revegetate open areas as soon as practicable after grade drilling. Implement appropriate vegetative practices, such as the following (list not exclusive): temporary or permanent seeding, mulching, sod stabilization, vegetative buffer strips, and tree protection practices. Begin implementing appropriate vegetative practices on all disturbed areas within 14 days following the last activity in that area.

8.I.4 Additional SWPPP Requirements.

8.I.4.1 ***Drainage Area Site Map.*** (See also Part 5.2.2) Document in your SWPPP where any of the following may be exposed to precipitation or surface runoff: Reportable Quantity (RQ) releases; locations used for the treatment, storage, or disposal of wastes; processing areas and storage areas; chemical mixing areas; construction and drilling areas; all areas subject to the effluent guidelines requirements for "No Discharge" in accordance with 40 CFR 435.32; and the structural controls to achieve compliance with the "No Discharge" requirements.

8.I.4.2 ***Potential Pollutant Sources.*** (See also Part 5.2.3) Also document in your SWPPP the following sources and activities that have potential pollutants associated with them: chemical, cement, mud, or gel mixing activities; drilling or mining activities; and equipment cleaning and rehabilitation activities. In addition, include information about the reportable quantity (RQ) release that triggered the permit application requirements: the nature of the release (e.g., spill of oil from a drum storage area), amount of oil or hazardous substance released, amount of substance recovered, date of the release, cause of the release (e.g., poor handling techniques and lack of containment in the area), areas affected by the release (i.e., land and water), procedures to clean up release, actions or procedures implemented to prevent or improve response to a release, and remaining potential contamination of stormwater from release (taking into account human health risks, the control of drinking water intakes, and the designated uses of the receiving water).

8.I.4.3 ***Erosion and Sediment Controls***. (See also Part 2.1.2.5) Unless covered by EPA's Construction General Permit (CGP), the additional documentation requirements for sediment and erosion controls for well drillings and sand/shale mining areas include the following:

8.I.4.3.1 ***Site Description.*** Also include a description in your SWPPP of the nature of the exploration activity, estimates of the total area of site and area disturbed due to exploration activity, an estimate of runoff coefficient of the site, a site drainage map, including approximate slopes, and the names of all receiving waters.

8.I.4.3.2 ***Vegetative Controls.*** Document vegetative practices used consistent with Part 8.I.3.1 in the SWPPP.

8.I.5 Additional Inspection Requirements.

All erosion and sediment controls must be inspected either: 1) every 7 days; or 2) once every 14 calendar days and within 24 hours of a storm event of 0.25 inches or greater.

Part 8 – Sector-Specific Requirements for Industrial Activity

Subpart J – Sector J – Non-Metallic Mineral Mining and Dressing.

You must comply with Part 8 sector-specific requirements associated with your primary industrial activity and any co-located industrial activities, as defined in Appendix A. The sector-specific requirements apply to those areas of your facility where those sector-specific activities occur. These sector-specific requirements are in addition to any requirements specified elsewhere in this permit.

Note: Where compliance with a requirement in a separate exploration permit, mining permit, reclamation plan, Surface Mining Control and Reclamation Act (SMCRA) requirements, etc. will result in you fully meeting any requirement in this Subpart, you are considered to have complied with the relevant requirement in this Subpart. You must include documentation in your SWPPP describing your rationale for concluding that any particular action on your part is sufficient to comply with the corresponding requirement in this Subpart.

8.J.1 Covered Stormwater Discharges.

The requirements in Subpart J apply to stormwater discharges associated with industrial activity from Active and Inactive Non-Metallic Mineral Mining and Dressing facilities as identified by the SIC Codes specified under Sector J in Table D-1 of Appendix D of the permit.

8.J.1.1 ***Covered Discharges from Inactive Facilities.*** All stormwater discharges.

8.J.1.2 ***Covered Discharges from Active and Temporarily Inactive Facilities***. All stormwater discharges, except for most stormwater discharges subject to the existing effluent limitation guideline at 40 CFR Part 436. Mine dewatering discharges composed entirely of stormwater or uncontaminated ground water seepage from: construction sand and gravel, industrial sand, and crushed stone mining facilities.

8.J.1.3 ***Covered Discharges from Earth-Disturbing Activities Conducted Prior to Active Mining Activities.*** All stormwater discharges.

8.J.1.4 ***Covered Discharges from Sites Undergoing Reclamation.*** All stormwater discharges.

8.J.2 Limitations on Coverage.

Most stormwater discharges subject to an existing effluent limitation guideline at 40 CFR Part 436 are not authorized by this permit. The exceptions to this limitation, which are covered by this permit, are mine dewatering discharges composed entirely of stormwater or uncontaminated ground water seepage from construction sand and gravel, industrial sand, and crushed stone mining facilities.

8.J.3 Definitions.

The following definitions are not intended to supersede the definitions of active and inactive mining facilities established by 40 CFR 122.26(b)(14)(iii).

8.J.3.1 ***Mining operations*** – For this permit, mining operations are grouped into two distinct categories, with distinct effluent limits and requirements applicable to each: a) earth-disturbing activities conducted prior to active mining activities); and b) active mining activities, which includes reclamation. "Mining operations" can occur at both inactive mining facilities and temporarily inactive mining facilities.

8.J.3.2 ***Earth-disturbing activities conducted prior to active mining activities*** – Consists of two classes of earth-disturbing (i.e., clearing, grading and excavation) activities:

a. activities performed for purposes of mine site preparation, including: cutting new rights of way (except when related to access road construction); providing access to a

mine site for vehicles and equipment (except when related to access road construction); other earth disturbances associated with site preparation activities on any areas where active mining activities have not yet commenced (e.g., for heap leach pads, waste rock facilities, tailings impoundments, wastewater treatment plants); and

b. construction of staging areas to prepare for erecting structures such as to house project personnel and equipment, mill buildings, etc., and construction of access roads. Earth-disturbing activities associated with the construction of staging areas and the construction of access roads conducted prior to active mining are considered to be "construction" and have additional effluent limits in Part 8.J .4.2.

8.J.3.3 ***Active mining activities*** – Activities related to the extraction, removal or recovery, and benefication of n*on-metallic minerals* from the earth; removal of overburden and waste rock to expose mineable minerals; and site reclamation and closure activities. All such activities occur within the "active mining area." Reclamation involves activities undertaken, in compliance with applicable mined land reclamation requirements, to return the land to an appropriate post-mining contour and land use in order to meet applicable federal and state reclamation requirements. In addition, once earth-disturbing activities conducted prior to active mining activities have ceased and all related requirements in Part 8.J.4 have been met, and a well-delineated "active mining area" has been established, all activities (including any clearing, grading, and excavation) that occur within the active mining area are "active mining activities

8.J.3.4 ***Active mining area*** – A place where work or other activity related to the extraction, removal or recovery of *n*on-metallic minerals is being conducted, except, with respect to surface mines, any area of land on or in which grading has been completed to return the earth to desired contour and reclamation work has begun.

Note: Earth-disturbing activities described in the definition in Part 8.J.3.2 that occur on areas outside the active mining area (e.g., for expansion of the mine into undeveloped territory) are considered "earth-disturbing conducted prior to active mining activities", and must comply with the requirements in Part 8.J.4.

8.J.3.5 ***Inactive mineral mining facility*** – A site or portion of a site where mineral mining and/or milling occurred in the past but there are no active mining activities occurring as defined above, and where the inactive portion is not covered by an active mining permit issued by the applicable state or federal agency. An inactive mineral mining facility has an identifiable owner / operator. Sites where mining claims are being maintained prior to disturbances associated with the extraction, beneficiation, or processing of mined materials, and sites where minimal activities are undertaken for the sole purpose of maintaining a mining claim are not considered either active or inactive mining facilities and do not require an NPDES industrial stormwater permit.

8.J.3.6 ***Temporarily inactive mineral mining facility*** – A site or portion of a site where *n*on-metallic mineral mining and/or milling occurred in the past but currently are not being actively undertaken, and the facility is covered by an active mining permit issued by the applicable state or federal agency.

8.J.4 Requirements Applicable to Earth-Disturbing Activities Conducted Prior to Active Mining Activities.

Stormwater discharges from earth-disturbing activities conducted prior to active mining activities (defined in Part 8.J.3.2) are covered under this permit. For such earth-disturbing activities, you must comply with all applicable requirements in Parts 1-9 of the MSGP except for

the technology-based effluent limits in Part 8.J.5 and Part 2.1.2, the inspection requirements in Part 8.J.7 and Part 3, and the monitoring requirements in Part 8.J.8 and Part 6.

Authorized discharges from areas where earth-disturbing activities have ceased and stabilization as specified in Part 8.J.4.19 or 8.J.4.2.11, where appropriate, has been completed (stabilization is not required for areas where active mining activities will occur), are no longer subject to the Part 8.J.4 requirements. At such time, authorized discharges become subject to all other applicable requirements in the MSGP, including the effluent limits in Parts 2.1.2 and 8.J.5, the inspection requirements in Parts 3 and 8.J.7, and the monitoring requirements in Parts 6 and 8.J.8.

8.J.4.1 Technology-Based Effluent Limits Applicable to All Earth-Disturbing Activities Conducted Prior to Active mining Activities. The following technology-based effluent limits apply to authorized discharges from all earth-disturbing activities conducted prior to active mining activities defined in Part 8.J.3.2(a) and 8.J.3.2(b). These limits supersede the technology-based limits listed in Part 2.1.2 and Part 8.J.5 of the MSGP.

8.J.4.1.1 Erosion and sediment control installation requirements.

- By the time construction activities commence, install and make operational downgradient sediment controls, unless this timeframe is infeasible. If infeasible you must install and make such controls operational as soon as practicable or as soon as site conditions permit.
- All other stormwater controls described in the SWPPP must be installed and made operational as soon as conditions on each portion of the site allows.

8.J.4.1.2 Erosion and sediment control maintenance requirements. You must:

- Ensure that all erosion and sediment controls remain in effective operating condition.
- Wherever you determine that a stormwater control needs maintenance to continue operating effectively, initiate efforts to fix the problem immediately after its discovery, and complete such work by the end of the next work day.
- When a stormwater control must be replaced or significantly repaired, complete the work within 7 days, unless infeasible. If 7 days is infeasible, you must complete the installation or repair as soon practicable.

8.J.4.1.3 Perimeter controls. You must:

- Install sediment controls along those perimeter areas of your disturbed area that will receive stormwater, except where site conditions prevent the use of such controls (in which case, maximize their installation to the extent practicable).
- Remove sediment before it accumulates to one-half of the above-ground height of any perimeter control.

8.J.4.1.4 Sediment track-out. For construction vehicles and equipment exiting the site directly onto paved roads, you must:

- Use appropriate stabilization techniques to minimize sediment track-out from vehicles and equipment prior to exit;
- Use additional controls to remove sediment from vehicle and equipment tires prior to exit, where necessary;
- Remove sediment that is tracked out onto paved roads by end of the work day.

Note: EPA recognizes that some fine grains may remain visible on the surfaces of off-site streets, other paved areas, and sidewalks even after you have

implemented sediment removal practices. Such "staining" is not a violation of Part 8.J.4.1.4.

8.J.4.1.5 ***Soil or sediment stockpiles.*** You must:

- Minimize erosion of stockpiles from stormwater and wind via temporary cover, if feasible.
- Prevent up-slope stormwater flows from causing erosion of stockpiles (e.g., by diverting flows around the stockpile).
- Minimize sediment from stormwater that runs off of stockpiles, using sediment controls (e.g., a sediment barrier or downslope sediment control).

8.J.4.1.6 ***Sediment basins.*** If you intend to install a sediment basin to treat stormwater from your earth-disturbing activities, you must:

- Provide storage for either (1) the 2-year, 24-hour storm, or (2) 3,600 cubic feet per acre drained.
- Prevent erosion of (1) basin embankments using stabilization controls (e.g., erosion control blankets), and (2) the inlet and outlet points of the basin using erosion controls and velocity dissipation devices.

8.J.4.1.7 ***Minimize dust.*** You must minimize the generation of dust through the appropriate application of water or other dust suppression techniques that minimize pollutants being discharged into surface waters.

8.J.4.1.8 ***Restrictions on use of treatment chemicals.*** If you intend to use sediment treatment chemicals at your site, you are subject to the following minimum requirements:

- Use conventional erosion and sediment controls prior to and after application of chemicals;
- Select chemicals suited to soil type, and expected turbidity, pH, flow rate;
- Minimize the discharge risk from stored chemicals;
- Comply with state/local requirements;
- Use chemicals in accordance with good engineering practices and specifications of chemical supplier;
- Ensure proper training;
- Provide proper SWPPP documentation.

If you plan to use cationic treatment chemicals (as defined in Appendix A), you are ineligible for coverage under this permit, unless you notify your applicable EPA Regional Office in advance and the EPA Regional Office authorizes coverage under this permit after you have included appropriate controls and implementation procedures designed to ensure that your use of cationic treatment chemicals will not lead to a violation of water quality standards.

8.J.4.1.9 ***Site stabilization requirements for earth-disturbing activities performed for purposes of mine site preparation as defined in 8.J.3.2(a)*** (i.e., not applicable to construction of staging areas for structures and access roads as defined in 8.J.3.2(b)). You must comply with the following stabilization requirements except where the intended function of the site accounts for such disturbed earth (e.g., the earth disturbances will become actively mined, or the controls implemented at the active mining area effectively control the disturbance):

- *Temporary stabilization of disturbed areas.* Stabilization measures must be initiated immediately in portions of the site where earth-disturbing activities performed for purposes of mine site preparation (as defined in

8.J.3.2(a)) have temporarily ceased, but in no case more than 14 days after such activities have temporarily ceased. In arid, semi-arid, and drought-stricken areas, or in areas subject to snow or freezing conditions, where initiating perennial vegetative stabilization measures is not possible within 14 days after earth-disturbing activities performed for purposes of mine site preparation has temporarily ceased, temporary vegetative stabilization measures must be initiated as soon as practicable. Until temporary vegetative stabilization is achieved, interim measures such as erosion control blankets with an appropriate seed base and tackifiers must be employed. In areas of the site where earth-disturbing activities performed for purposes of mine site preparation have permanently ceased prior to active mining, temporary stabilization measures must be implemented to minimize mobilization of sediment or other pollutants until active mining activities commence.

- *Final stabilization of disturbed areas.* Stabilization measures must be initiated immediately where earth-disturbing activities performed for purposes of mine site preparation (as defined in 8.J.3.2(a)) have permanently ceased, but in no case more than 14 days after the earth-disturbing activities have permanently ceased. In arid, semi-arid, and drought-stricken areas, or in areas subject to snow or freezing conditions, where initiating perennial vegetative stabilization measures is not possible within 14 days after earth-disturbing activities have permanently ceased, final vegetative stabilization measures must be initiated as soon as possible. Until final stabilization is achieved, temporary stabilization measures, such as erosion control blankets with an appropriate seed base and tackifiers, must be used.

8.J.4.2 Additional Technology-Based Effluent Limits Applicable Only to the Construction of Staging Areas for Structures and Access Roads. The following technology-based effluent limits apply to authorized discharges from earth-disturbing activities associated with the construction of staging areas and the construction of access roads, as defined in Part 8.J.3.2(b). These limits supersede the technology-based limits listed in Part 2.1.2 and Part 8.J.5 of the MSGP. These limits do not apply to earth-disturbing activities performed for purposes of mine site preparation (as defined in 8.J.3.2(a)).

8.J.4.2.1 Area of disturbance. You must minimize the amount of soil exposed during construction activities.

8.J.4.2.2 Erosion and sediment control design requirements. You must:

- Design, install and maintain effective erosion and sediment controls to minimize the discharge of pollutants from construction activities. Account for the following factors in designing your erosion and sediment controls:
  - The expected amount, frequency, intensity and duration of precipitation;
  - The nature of stormwater runoff and run-on at the site, including factors such as impervious surfaces, slopes and site drainage features;
  - The range of soil particle sizes expected to be present on the site.
- Direct discharges from your stormwater controls to vegetated areas of your site to increase sediment removal and maximize stormwater infiltration, including any natural buffers, unless infeasible. Use velocity dissipation devices if necessary to prevent erosion when directing stormwater to vegetated areas.

- If any stormwater flow becomes or will be channelized at your site, you must design erosion and sediment controls to control both peak flowrates and total stormwater volume to minimize channel and streambank erosion and scour in the immediate vicinity of discharge points.
- If you install stormwater conveyance channels, they must be designed to avoid unstabilized areas on the site and to reduce erosion, unless infeasible. In addition, you must minimize erosion of channels and their embankments, outlets, adjacent streambanks, slopes, and downstream waters during discharge conditions through the use of erosion controls and velocity dissipation devices within and along the length of any constructed stormwater conveyance channel, and at any outlet to provide a non-erosive flow velocity.

8.J.4.2.3 ***Natural Buffers.*** For any stormwater discharges from construction activities within 50 feet of a water of the U.S., you must comply with one of the following compliance alternatives:

1. Provide a 50-foot undisturbed natural buffer between construction activities and the water of the U.S.; or

2. Provide an undisturbed natural buffer that is less than 50 feet supplemented by additional erosion and sediment controls, which in combination, achieve a sediment load reduction that is equivalent to a 50-foot undisturbed natural buffer; or

3. If it is infeasible to provide an undisturbed natural buffer of any size, implement erosion and sediment controls that achieve a sediment load reduction that is equivalent to a 50-foot undisturbed natural buffer.

There are exceptions when buffer requirements do not apply:
- There is no stormwater discharge from construction disturbances to a water of the U.S;
- The natural buffer has already been eliminated by preexisting development disturbances;
- The disturbance is for the construction of a water-dependent structure or construction approved under a CWA section 404 permit;
- For linear construction projects, you are not required to comply with the requirements if there are site constraints provided that, to the extent feasible, you limit disturbances within 50 feet of a water of the U.S. and/or you provide supplemental erosion and sediment controls to treat stormwater discharges from any disturbances within 50 feet of a water of the U.S.

See http://water.epa.gov/polwaste/npdes/stormwater/upload/cgp2012_appendixg.pdf for guidance on complying with these alternatives.

8.J.4.2.4 ***Soil or sediment stockpiles.*** In addition to the requirements in Part 8.J.4.1.5, you must locate any piles outside of any natural buffers established under Part 8.J.4.2.3.

8.J.4.2.5 ***Sediment basins.*** In addition to the requirements in Part 8.J.4.1.6, you must locate sediment basins outside of any surface waters and any natural buffers established under Part 8.J.4.2.3, and you must utilize outlet structures that withdraw water from the surface, unless infeasible.

8.J.4.2.6 ***Native topsoil preservation.*** You must preserve native topsoil removed during clearing, grading, or excavation, unless infeasible. Store topsoil in a manner that will maximize its use in reclamation or final vegetative stabilization (e.g., by keeping the topsoil stabilized with seed or similar measures). This requirement does not apply if the intended function of the disturbed area dictates that topsoil be disturbed or removed.

8.J.4.2.7 ***Steep slopes.*** You must minimize the disturbance of steep slopes. The permit does not prevent or prohibit disturbance on steep slopes.

Depending on site conditions and needs, disturbance on steep slopes may be necessary (e.g., a road cut in mountainous terrain; for grading steep slopes prior to erecting the mine office). Where steep slope disturbances are necessary, you can minimize the disturbances to steep slopes through the implementation of a number of standard erosion and sediment control practices, such as by phasing disturbances in these areas and using stabilization practices specifically for steep grades.

8.J.4.2.8 ***Soil compaction.*** Where final vegetative stabilization will occur or where infiltration practices will be installed, you must either restrict vehicle/ equipment use in these areas to avoid soil compaction or use soil conditioning techniques to support vegetative growth. Minimizing soil compaction is not required where compacted soil is integral to the functionality of the site.

8.J.4.2.9 ***Dewatering Practices.*** You are prohibited from discharging ground water or accumulated stormwater that is removed from excavations, trenches, foundations, vaults or other similar points of accumulation, unless such waters are first effectively managed by appropriate controls (e.g., sediment basins or sediment traps, sediment socks, dewatering tanks, tube settlers, weir tanks, or filtration systems). Uncontaminated, non-turbid dewatering water can be discharged without being routed to a control.

You must also meet the following requirements for dewatering activities:

- *Discharge requirements:*
  - No discharging visible floating solids or foam;
  - Remove oil, grease and other pollutants from dewatering water via an oil-water separator or suitable filtration device (such as a cartridge filter);
  - Utilize vegetated upland areas of the site, to the extent feasible, to infiltrate dewatering water before discharge. In no case shall waters of the U.S. be considered part of the treatment area;
  - Implement velocity dissipation devices at all points where dewatering water is discharged;
  - Haul backwash water away for disposal or return it to the beginning of the treatment process; and
  - Clean or replace the filter media used in dewatering devices when the pressure differential equals or exceeds the manufacturer's specifications.
- Treatment chemical restrictions: If you use polymers, flocculants or other chemicals to treat dewatering water, you must comply with the requirements in Parts 8.J.4.1.8.

8.J.4.2.10 Pollution prevention requirements.

- *Prohibited discharges* (this non-exhaustive list of prohibited non-stormwater discharges is included here as a reminder that only the only allowable non-stormwater discharges are those enumerated in Part 1.1.3):
  - Wastewater from washout of concrete;
  - Wastewater from washout and cleanout of stucco, paint, form release oils, curing compounds, and other construction materials;
  - Fuels, oils, or other pollutants used for operation and maintenance of vehicles or equipment;
  - Soaps, solvents, or detergents used in vehicle or equipment washing;
  - Toxic or hazardous substances from a spill or other release.
- *Design and location requirements:* Minimize the discharge of pollutants from pollutant sources by:
  - Minimizing exposure;
  - Using secondary containment, spill kits, or other equivalent measures;
  - Locating pollution sources away from surface waters, storm sewer inlets, and drainageways;
  - Cleaning up spills immediately (do not clean by hosing area down).
- *Pollution prevention requirements for wash waters:* Minimize the discharge of pollutants from equipment and vehicle washing, wheel wash water, and other wash waters. Wash waters must be treated in a sediment basin or alternative control that provides equivalent or better treatment prior to discharge;
- *Pollution prevention requirements for the storage, handling, and disposal of construction products, materials, and wastes:* Minimize the exposure of building materials, building products, construction wastes, trash, landscape materials, fertilizers, pesticides, herbicides, detergents, sanitary waste, and other materials present on the site to stormwater. Minimization of exposure is not required in cases where the exposure to stormwater will not result in a discharge of pollutants, or where exposure of a specific material or product poses little risk of stormwater contamination (such as final products and materials intended for outdoor use).

8.J.4.2.11 Site Stabilization requirements for the construction of staging areas for structures and access roads as defined in 8.J.3.2(b) *(i.e., not applicable to earth-disturbing activities performed for purposes of mine site preparation as defined in 8.J.3.2(a))*. You must comply with the following stabilization requirements, except where the intended function of the site accounts for such disturbed earth (e.g., the area of construction will become actively mined, or the controls implemented at the active mining area effectively control the disturbance):

- By no later than the end of the next work day after construction work in an area has stopped permanently or temporarily ("temporarily" means the land will be idle for a period of 14 days or more but earth-disturbing activities will resume in the future), immediately initiate stabilization measures;
- If using vegetative measures, by no later than 14 days after initiating stabilization:
  - Seed or plant the area, and provide temporary cover to protect the planted area;
  - Once established, vegetation must be uniform, perennial (if final stabilization), and cover at least 70% of stabilized area based on density of native vegetation.

- If using non-vegetative stabilization, by no later than 14 days after initiating stabilization:
  - Install or apply all non-vegetative measures;
  - Cover all areas of exposed soil.

Note: For the purposes of this permit, EPA will consider any of the following types of activities to constitute the initiation of stabilization: 1. Prepping the soil for vegetative or non-vegetative stabilization; 2. Applying mulch or other non-vegetative product to the exposed area; 3. Seeding or planting the exposed area; 4. Starting any of the activities in # 1 – 3 on a portion of the area to be stabilized, but not on the entire area; and 5. Finalizing arrangements to have stabilization product fully installed in compliance with the applicable deadline for completing stabilization.

Exceptions:

- Arid, semi-arid (if construction occurs during seasonally dry period), or drought-stricken areas:
  - Within 14 days of stopping construction work in an area, install any necessary non-vegetative stabilization measures;
  - Initiate vegetative stabilization as soon as conditions on the site allow;
  - Document the schedule that will be followed for initiating and completing vegetative stabilization;
  - Plant the area so that within 3 years the 70% cover requirement is met.
- Sites affected by severe storm events or other unforeseen circumstances:
  - Initiate vegetative stabilization as soon conditions on the site allow;
  - Document the schedule that will be followed for initiating and completing vegetative stabilization;
  - Plant the area so that so that within 3 years the 70% cover requirement is met.

8.J.4.3 *Water Quality-Based Requirements Applicable to Earth-Disturbing Activities Conducted Prior to Active Mining Activities.*

The following water quality-based limits apply to earth-disturbing activities conducted prior to active mining activities defined in Part 8.J.3.2(a) and 8.J.3.2(b), in addition to the water quality-based limits in Part 2.2 of the MSGP.

Stricter requirements apply if your site will discharge to an impaired water or a water that is identified by your state, tribe, or EPA as a Tier 2 or Tier 2.5 for antidegradation purposes:

- More rapid stabilization of exposed areas: Complete initial stabilization activities within 7 days of stopping construction work.
- More frequent site inspections: Once every 7 days and within 24 hours of a storm event of 0.25 inches or greater.

8.J.4.4 *Inspection Requirements Applicable to Earth-Disturbing Activities Conducted Prior to Active Mining Activities.*

The following requirements supersede the inspections requirements in Part 3 and 8.J.7 of the MSGP for earth-disturbing activities conducted prior to active mining activities defined in Part 8.J.3.2(a) and 8.J.3.2(b).

8.J.4.4.1 *Inspection Frequency*

- At least once every 7 calendar days, or
- Once every 14 calendar days and within 24 hours of a storm event of 0.25 inches or greater.

Note:

- Inspections only required during working hours;
- Inspections not required during unsafe conditions; and
- If you choose to inspect once every 14 days, you must have a method for measuring rainfall amount on site (either rain gauge or representative weather station)

Note: To determine if a storm event of 0.25 inches or greater has occurred on your site, you must either keep a properly maintained rain gauge on your site, or obtain the storm event information from a weather station that is representative of your location. For any day of rainfall during normal business hours that measures 0.25 inches or greater, you must record the total rainfall measured for that day.

Note: You are required to specify in your SWPPP which schedule you will be following.

Note: "Within 24 hours of the occurrence of a storm event" means that you are required to conduct an inspection within 24 hours once a storm event has produced 0.25 inches, even if the storm event is still continuing. Thus, if you have elected to inspect bi- and there is a storm event at your site that continues for multiple days, and each day of the storm produces 0.25 inches or more of rain, you are required to conduct an inspection within 24 hours of the first day of the storm and within 24 hours after the end of the storm.

8.J.4.4.2 Reductions in Inspection Frequency

- Stabilized areas: You may reduce the frequency of inspections to once per month in any area of your site where stabilization has occurred pursuant to Part 8.J.4.1.9 or 8.J.4.2.11.
- Arid, semi-arid, and drought stricken areas: If earth-disturbing activities are occurring during the seasonally dry period or during a period in which drought is predicted to occur, you may reduce inspections to once per month and within 24 hours of a 0.25 inch storm event.
- Frozen conditions: You may temporarily suspend or reduce inspections to once per month until thawing conditions occur if frozen conditions are continuous and disturbed areas have been stabilized. For extreme conditions in remote areas, e.g., where transit to the site is perilous/restricted or temperatures are routinely below freezing, you may suspend inspections until the conditions are conducive to safe access, and more frequent inspections can resume.

***8.J.4.4.3 Areas to be Inspected.* You must at a minimum inspect the all of the following areas:**

- Disturbed areas;
- Stormwater controls and pollution prevention measures;
- Locations where stabilization measures have been implemented;
- Material, waste, borrow, or equipment storage and maintenance areas;
- Areas where stormwater flows;
- Points of discharge.

8.J.4.4.4 What to Check for During Inspections. At a minimum you must check:

- Whether all stormwater controls are installed, operational and working as intended;
- Whether any new or modified stormwater controls are needed;
- For conditions that could lead to a spill or leak;

- For visual signs of erosion/sedimentation at points of discharge.

If a discharge is occurring:
- The quality and characteristics of the discharge;
- Whether controls are operating effectively.

8.J.4.4.5 ***Inspection Report.*** Within 24 hours of an inspection, complete a report that includes:
- Inspection date;
- Name and title of inspector(s);
- Summary of inspection findings;
- Rainfall amount that triggered the inspection (if applicable);
- If it was unsafe to inspect a portion of the site, include documentation of the reason and the location(s);
- Each inspection report must be signed;
- Keep a current copy of all reports at the site or at an easily accessible location.

8.J.4.5 ***Cessation of Requirements Applicable to Earth-Disturbing Activities Conducted Prior to Active Mining Activities.*** The requirements in 8.J.4 no longer apply for any earth-disturbing activities conducted prior to active mining activities as defined in 8.J.3.2(a) or 8.J.3.2(b) where:
1. Earth-disturbing activities have ceased; and
2. Stabilization has been met consistent with Part 8.J.4.1.9 or 8.J.4.2.11 (not required for areas where active mining activities will occur).

8.J.5 Technology-Based Effluent Limits for Active Mining Activities.

Note: These requirements do not apply for any discharges from earth-disturbing activities conducted prior to active-mining as defined in 8.J.3.2(a) or 8.J.3.2(b).

8.J.5.1 ***Employee Training.*** Conduct employee training at least annually at active and temporarily inactive sites. (See also Part 2.1.2.8).

8.J.5.2 ***Stormwater Controls***. Apart from the control measures you implement to meet your Part 2 effluent limits, where necessary to minimize pollutant discharges in stormwater, implement the following control measures at your site. The potential pollutants identified in Part 8.J.6.3 shall determine the priority and appropriateness of the control measures selected.

Stormwater Diversions: Divert stormwater away from potential pollutant sources through implementation of control measures such as the following, where determined to be feasible (list not exclusive): interceptor or diversion controls (e.g., dikes, swales, curbs, berms); pipe slope drains; subsurface drains; conveyance systems (e.g., channels or gutters, open-top box culverts, and waterbars; rolling dips and road sloping; roadway surface water deflector and culverts); or their equivalents. For mines subject to dust control requirements under state or county air quality permits, provided the requirements are equivalent, compliance with such air permit dust requirements shall constitute compliance with the dust control effluent limit in Part 2.1.2.10.

Capping: When capping is necessary to minimize pollutant discharges in stormwater, identify the source being capped and the material used to construct the cap.

Treatment: If treatment of stormwater (e.g., chemical or physical systems, oil and water separators, artificial wetlands) is necessary to protect water quality, describe the type and location of treatment used. Passive and/or active treatment of stormwater runoff is encouraged. Treated runoff may be discharged as a stormwater source regulated

under this permit provided the discharge is not combined with discharges subject to effluent limitation guidelines for the Mineral Mining and Processing Point Source Category (40 CFR Part 436).

8.J.5.3 ***Discharge Testing.*** (See also Part 5.2.3.4) Test or evaluate all outfalls covered under this permit for the presence of specific mining-related but unauthorized non-stormwater discharges such as discharges subject to effluent limitations guidelines (e.g., 40 CFR Part 436). Alternatively (if applicable), you may keep a certification with your SWPPP, per Part 8.J.6.6.

8.J.6 Additional SWPPP Requirements for Mining Operations.

Note: The requirements in Part 8.J.6 are not applicable to inactive mineral mining facilities.

8.J.6.1 ***Nature of Industrial Activities.*** (See also Part 5.2.2) Document in your SWPPP the mining and associated activities that can potentially affect the stormwater discharges covered by this permit, including a general description of the location of the site relative to major transportation routes and communities.

8.J.6.2 ***Site Map.*** (See also Part 5.2.2) Document in your SWPPP the locations of the following (as appropriate): mining or milling site boundaries; access and haul roads; outline of the drainage areas of each stormwater outfall within the facility with indications of the types of discharges from the drainage areas; location(s) of all permitted discharges covered under an individual NPDES permit; outdoor equipment storage, fueling, and maintenance areas; materials handling areas; outdoor manufacturing, outdoor storage, and material disposal areas; outdoor chemicals and explosives storage areas; overburden, materials, soils, or waste storage areas; location of mine drainage dewatering or other process water; heap leach pads; off-site points of discharge for mine dewatering and process water; surface waters; boundary of tributary areas that are subject to effluent limitations guidelines; and location(s) of reclaimed areas.

8.J.6.3 ***Potential Pollutant Sources.*** (See also Part 5.2.3) For each area of the mine or mill site where stormwater discharges associated with industrial activities occur, document in your SWPPP the types of pollutants (e.g., heavy metals, sediment) likely to be present in significant amounts. For example, phosphate mining facilities will likely need to document pollutants such as selenium, which can be present in significant amounts in their discharges. Consider these factors: the mineralogy of the waste rock (e.g., acid forming); toxicity and quantity of chemicals used, produced, or discharged; the likelihood of contact with stormwater; vegetation of site (if any); and history of significant leaks or spills of toxic or hazardous pollutants. Also include a summary of any existing waste rock or overburden characterization data and test results for potential generation of acid rock drainage.

8.J.6.4 ***Documentation of Control Measures.*** To the extent that you use any of the control measures in Part 8.J.5.2, document them in your SWPPP per Part 5.2.4. If control measures are implemented or planned but are not listed here (e.g., substituting a less toxic chemical for a more toxic one), include descriptions of them in your SWPPP. If you are in compliance with dust control requirements under state or county air quality permits, you must state (or summarize, as necessary) what the state or county air quality permit dust control requirements are and how you've achieved compliance with them.

8.J.6.5 ***Employee Training.*** All employee training(s) conducted in accordance with Part 8.J.5.1 must be documented with the SWPPP.

8.J.6.6 ***Certification of Permit Coverage for Commingled Non-Stormwater Discharges***. If you determine that you are able to certify, consistent with Part 8.J.5.3, that a particular

discharge composed of commingled stormwater and non-stormwater is covered under a separate NPDES permit, and that permit subjects the non-stormwater portion to effluent limitations prior to any commingling, you must retain such certification with your SWPPP. This certification must identify the non-stormwater discharges, the applicable NPDES permit(s), the effluent limitations placed on the non-stormwater discharge by the permit(s), and the points at which the limitations are applied.

8.J.7 Additional Inspection Requirements. (See also Part 3.1)

Except for earth-disturbing activities conducted prior to active mining activities as defined in Part 8.J.3.2(a) and 8.J.3.2(b), which are subject to Part 8.J.4.4, perform inspections at least quarterly unless adverse weather conditions make the site inaccessible. Sites which discharge to waters which are designated as Tier 2 or 2.5 or waters which are impaired for sediment or nitrogen must be inspected monthly. See Part 8.J.8.1 for inspection requirements for inactive and unstaffed sites.

8.J.8 Sector-Specific Benchmarks. (See also Part 6)

Table 8.J-1 identifies benchmarks that apply to the specific subsectors of Sector J. These benchmarks apply to both your primary industrial activity and any co-located industrial activities. Note: There are no Part 8.J.8 monitoring and reporting or impaired waters monitoring requirements for inactive and unstaffed sites.

Table 8.J-1.

Subsector (You may be subject to requirements for more than one sector/subsector)	Parameter	Benchmark Monitoring Concentration
Subsector J1. Sand and Gravel Mining (SIC 1442, 1446)	Nitrate plus Nitrite Nitrogen	0.68 mg/L
	Total Suspended Solids (TSS)	100 mg/L
Subsector J2. Dimension and Crushed Stone and Nonmetallic Minerals (except fuels) (SIC 1411, 1422-1429, 1481, 1499)	Total Suspended Solids (TSS)	100 mg/L

8.J.8.1 Inactive and Unstaffed Sites – Conditional Exemption from No Exposure Requirement for Routine Inspections, Quarterly Visual Assessments, and Benchmark and Impaired Waters Monitoring. As a Sector J facility, if you are seeking to exercise a waiver from either the routine inspection, quarterly visual assessment or the benchmark and/or impaired monitoring requirements for inactive and unstaffed sites (including temporarily inactive sites), you are conditionally exempt from the requirement to certify that "there are no industrial materials or activities exposed to stormwater" in Parts 3.1.1, 3.2.3, 6.2.1.3, and 6.2.4.3. This exemption is conditioned on the following:

- If circumstances change and your facility becomes active and/or staffed, this exception no longer applies and you must immediately begin complying with the applicable benchmark monitoring requirements as if you were in your first year of permit coverage, and the quarterly visual assessment requirements; and
- EPA retains the authority to revoke this exemption and/or the monitoring waiver where it is determined that the discharge causes, has a reasonable potential to cause, or contributes to an instream excursion above an applicable water quality standard, including designated uses.

Subject to the two conditions above, if your facility is inactive and unstaffed, you are waived from the requirement to conduct routine facility inspections, quarterly visual assessments, and benchmark and impaired waters monitoring. You must still conduct an annual site inspection in

accordance with Part 3.1. You are encouraged to inspect your site more frequently where you have reason to believe that severe weather or natural disasters may have damaged control measures or increased discharges.

8.J.9 Effluent Limitations Based on Effluent Limitations Guidelines. (See also Part 6.2.2.1).

Table 8.J-2 identifies effluent limits that apply to the industrial activities described below. Compliance with these effluent limits is to be determined based on discharges from these industrial activities independent of commingling with any other waste streams that may be covered under this permit.

Table 8.J-2

Industrial Activity	Parameter	Effluent Limitation[1]
Mine dewatering discharges at crushed stone mining facilities (SIC 1422 - 1429)	pH	6.0 - 9.0
Mine dewatering discharges at construction sand and gravel mining facilities (SIC 1442)	pH	6.0 - 9.0
Mine dewatering discharges at industrial sand mining facilities (SIC 1446)	Total Suspended Solids (TSS)	25 mg/L, monthly avg.
		45 mg/L, daily maximum
	pH	6.0 - 9.0

[1]Monitor annually.

8.J.10 Termination of Permit Coverage.

8.J.10.1 ***Termination of Permit Coverage for Sites Reclaimed After December 17, 1990.*** A site or a portion of a site that has been released from applicable state or federal reclamation requirements after December 17, 1990, is no longer required to maintain coverage under this permit. If the site or portion of a site reclaimed after December 17, 1990, was not subject to reclamation requirements, the site or portion of the site is no longer required to maintain coverage under this permit if the site or portion of the site has been reclaimed as defined in Part 8.J.3.5.

8.J.10.2 ***Termination of Permit Coverage for Sites Reclaimed Before December 17, 1990.*** A site or portion of a site that was released from applicable state or federal reclamation requirements before December 17, 1990, or that was otherwise reclaimed before December 17, 1990, is no longer required to maintain coverage under this permit if the site or portion of the site has been reclaimed. A site or portion of a site is considered to have been reclaimed if: (1) stormwater runoff that comes into contact with raw materials, intermediate byproducts, finished products, and waste products does not have the potential to cause or contribute to violations of state water quality standards, (2) soil disturbing activities related to mining at the sites or portion of the site have been completed, (3) the site or portion of the site has been stabilized to minimize soil erosion, and (4) as appropriate depending on location, size, and the potential to contribute pollutants to stormwater discharges, the site or portion of the site has been revegetated, will be amenable to natural revegetation, or will be left in a condition consistent with the post-mining land use.

Part 8 – Sector-Specific Requirements for Industrial Activity

Subpart K – Sector K – Hazardous Waste Treatment, Storage, or Disposal Facilities.

You must comply with Part 8 sector-specific requirements associated with your primary industrial activity and any co-located industrial activities, as defined in Appendix A. The sector-specific requirements apply to those areas of your facility where those sector-specific activities occur. These sector-specific requirements are in addition to any requirements specified elsewhere in this permit.

8.K.1 Covered Stormwater Discharges.

The requirements in Subpart K apply to stormwater discharges associated with industrial activity from Hazardous Waste Treatment, Storage, or Disposal facilities (TSDFs) as identified by the Activity Code specified under Sector K in Table D-1 of Appendix D of the permit.

8.K.2 Industrial Activities Covered by Sector K.

This permit authorizes stormwater discharges associated with industrial activity from facilities that treat, store, or dispose of hazardous wastes and that are operating under interim status or a permit under subtitle C of RCRA.

Disposal facilities that have been properly closed and capped, and have no significant materials exposed to stormwater, are considered inactive and do not require permits.

8.K.3 Limitations on Coverage.

8.K.3.1 ***Prohibition of Non-Stormwater Discharges.*** (See also Part 1.1.4) The following are not authorized by this permit: leachate, gas collection condensate, drained free liquids, contaminated ground water, laboratory-derived wastewater, and contact wash water from washing truck and railcar exteriors and surface areas that have come in direct contact with solid waste at the landfill facility. (EPA includes these prohibited non-stormwater discharges here solely as a helpful reminder to the operator that the only non-stormwater discharges authorized by this permit are at Part 1.1.3.)

8.K.3.2 ***Limitations on Coverage for Facilities Providing Commercial TSDF Services.*** For facilities located in Region 6 (see Appendix C) coverage is limited to hazardous waste TSDFs that are self-generating (including occasionally accepting wastes from community household hazardous waste collection events as public service), handle only residential wastes, and/or only store hazardous wastes and do not treat or dispose of them. Coverage under this permit is not available to commercial waste disposal and treatment facilities located in Region 6 that dispose and treat on a commercial basis any produced hazardous wastes (i.e., not their own) as a service to commercial or industrial generators.

8.K.4 Definitions.

8.K.4.1 ***Contaminated stormwater*** – stormwater that comes into direct contact with landfill wastes, the waste handling and treatment areas, or landfill wastewater as defined in Part 8.K.4.4. Some specific areas of a landfill that may produce contaminated stormwater include (but are not limited to) the open face of an active landfill with exposed waste (no cover added); the areas around wastewater treatment operations; trucks, equipment, or machinery that has been in direct contact with the waste; and waste dumping areas.

8.K.4.2 ***Drained free liquids*** – aqueous wastes drained from waste containers (e.g., drums) prior to landfilling.

8.K.4.3 ***Landfill*** – an area of land or an excavation in which wastes are placed for permanent disposal, but that is not a land application or land treatment unit, surface

impoundment, underground injection well, waste pile, salt dome formation, salt bed formation, underground mine, or cave as these terms are defined in 40 CFR 257.2, 258.2, and 260.10.

8.K.4.4 ***Landfill wastewater*** – as defined in 40 CFR Part 445 (Landfills Point Source Category), all wastewater associated with, or produced by, landfilling activities except for sanitary wastewater, non-contaminated stormwater, contaminated ground water, and wastewater from recovery pumping wells. Landfill wastewater includes, but is not limited to, leachate, gas collection condensate, drained free liquids, laboratory derived wastewater, contaminated stormwater, and contact wash water from washing truck, equipment, and railcar exteriors and surface areas that have come in direct contact with solid waste at the landfill facility.

8.K.4.5 ***Leachate*** – liquid that has passed through or emerged from solid waste and contains soluble, suspended, or miscible materials removed from such waste.

8.K.4.6 ***Non-contaminated stormwater*** – stormwater that does not come into direct contact with landfill wastes, the waste handling and treatment areas, or landfill wastewater as defined in Part 8.K.4.4. Non-contaminated stormwater includes stormwater that flows off the cap, cover, intermediate cover, daily cover, and/or final cover of the landfill.

8.K.5 Sector-Specific Benchmarks. (See also Part 6)

Table 8.K-1 identifies benchmarks that apply to the specific subsectors of Sector K. These benchmarks apply to both your primary industrial activity and any co-located industrial activities.

Table 8.K-1.

Subsector (You may be subject to requirements for more than one sector/subsector)	Parameter	Benchmark Monitoring Concentration
Subsector K1. ALL - Industrial Activity Code "HZ" (Note: permit coverage limited in some states). Benchmarks only applicable to discharges not subject to effluent limitations in 40 CFR Part 445 Subpart A (see below).	Ammonia	2.14 mg/L
	Total Magnesium	0.064 mg/L
	Chemical Oxygen Demand (COD)	120 mg/L
	Total Arsenic (freshwater) Total Arsenic (saltwater)[1]	0.15 mg/L 0.069 mg/L
	Total Cadmium (freshwater)[2] Total Cadmium (saltwater)[1]	Hardness Dependent 0.04 mg/L
	Total Cyanide (freshwater) Total Cyanide (saltwater)[1]	0.022 mg/L 0.001 mg/L
	Total Lead (freshwater)[2] Total Lead (saltwater)[1]	Hardness Dependent 0.21 mg/L
	Total Mercury (freshwater) Total Mercury (saltwater)[1]	0.0014 mg/L 0.0018 mg/L
	Total Selenium (freshwater) Total Selenium (saltwater)[1]	0.005 mg/L 0.29 mg/L
	Total Silver (freshwater)[2] Total Silver (saltwater)[1]	Hardness Dependent 0.0019 mg/L

[1]Saltwater benchmark values apply to stormwater discharges into saline waters where indicated.
[2] The freshwater benchmark values of some metals are dependent on water hardness. For these parameters, permittees must determine the hardness of the receiving water (see Appendix J, "Calculating Hardness in Receiving Waters for Hardness Dependent Metals," for methodology), in accordance with Part 6.2.1.1, to identify the applicable 'hardness range' for determining their benchmark value applicable to their facility. Hardness Dependent Benchmarks follow in the table below:

Freshwater Hardness Range	**Cadmium** (mg/L)	**Lead** (mg/L)	**Silver** (mg/L)
0-24.99 mg/L	0.0005	0.014	0.0007
25-49.99 mg/L	0.0008	0.023	0.0007
50-74.99 mg/L	0.0013	0.045	0.0017
75-99.99 mg/L	0.0018	0.069	0.0030
100-124.99 mg/L	0.0023	0.095	0.0046
125-149.99 mg/L	0.0029	0.122	0.0065
150-174.99 mg/L	0.0034	0.151	0.0087
175-199.99 mg/L	0.0039	0.182	0.0112
200-224.99 mg/L	0.0045	0.213	0.0138
225-249.99 mg/L	0.0050	0.246	0.0168
250+ mg/L	0.0053	0.262	0.0183

8.K.6 Effluent Limitations Based on Effluent Limitations Guidelines. (See also Part 6.2.2.1)

Table 8.K-2 identifies effluent limitations that apply to the industrial activities described below. Compliance with these effluent limitations is to be determined based on discharges from these industrial activities independent of commingling with any other waste streams that may be covered under this permit.

Table 8.K-2[1]		
Industrial Activity	**Parameter**	**Effluent Limitation**
Discharges from hazardous waste landfills subject to effluent limitations in 40 CFR Part 445 Subpart A (see footnote).	Biochemical Oxygen Demand (BOD_5)	220 mg/L, daily maximum
		56 mg/L, monthly avg. maximum
	Total Suspended Solids (TSS)	88 mg/L, daily maximum
		27 mg/L, monthly avg. maximum
	Ammonia	10 mg/L, daily maximum
		4.9 mg/L, monthly avg. maximum
	Alpha Terpineol	0.042 mg/L, daily maximum
		0.019 mg/L, monthly avg. maximum
	Aniline	0.024 mg/L, daily maximum
		0.015 mg/L, monthly avg. maximum
	Benzoic Acid	0.119 mg/L, daily maximum
		0.073 mg/L, monthly avg. maximum
	Naphthalene	0.059 mg/L, daily maximum
		0.022 mg/L, monthly avg. maximum
	p-Cresol	0.024 mg/L, daily maximum
		0.015 mg/L, monthly avg. maximum
	Phenol	0.048 mg/L, daily maximum
		0.029 mg/L, monthly avg. maximum
	Pyridine	0.072 mg/L, daily maximum
		0.025 mg/L, monthly avg. maximum
	Total Arsenic	1.1 mg/L, daily maximum
		0.54 mg/L, monthly avg. maximum
	Total Chromium	1.1 mg/L, daily maximum
		0.46 mg/L, monthly avg. maximum
	Total Zinc	0.535 mg/L, daily maximum
		0.296 mg/L, monthly avg. maximum
	pH	Within the range of 6-9 standard pH units (s.u.)

[1] Monitor annually. As set forth at 40 CFR Part 445 Subpart A, these numeric limitations apply to contaminated stormwater discharges from hazardous waste landfills subject to the provisions of RCRA Subtitle C at 40 CFR Parts 264 (Subpart N) and 265 (Subpart N) except for any of the following facilities:

(a) landfills operated in conjunction with other industrial or commercial operations when the landfill receives only wastes generated by the industrial or commercial operation directly associated with the landfill;

(b) landfills operated in conjunction with other industrial or commercial operations when the landfill receives wastes generated by the industrial or commercial operation directly associated with the landfill and also receives other wastes, provided that the other wastes received for disposal are generated by a facility that is subject to the same provisions in 40 CFR Subchapter N as the industrial or commercial operation or that the other wastes received are of similar nature to the wastes generated by the industrial or commercial operation;

(c) landfills operated in conjunction with Centralized Waste Treatment (CWT) facilities subject to 40 CFR Part 437, so long as the CWT facility commingles the landfill wastewater with other non-landfill wastewater for discharge. A landfill directly associated with a CWT facility is subject to this part if the CWT facility discharges landfill wastewater separately from other CWT wastewater or commingles the wastewater from its landfill only with wastewater from other landfills; or

(d) landfills operated in conjunction with other industrial or commercial operations when the landfill receives wastes from public service activities, so long as the company owning the landfill does not receive a fee or other remuneration for the disposal service.

Part 8 – Sector-Specific Requirements for Industrial Activity

Subpart L – Sector L – Landfills, Land Application Sites, and Open Dumps.

You must comply with Part 8 sector-specific requirements associated with your primary industrial activity and any co-located industrial activities, as defined in Appendix A. The sector-specific requirements apply to those areas of your facility where those sector-specific activities occur. These sector-specific requirements are in addition to any requirements specified elsewhere in this permit.

8.L.1 Covered Stormwater Discharges.

The requirements in Subpart L apply to stormwater discharges associated with industrial activity from Landfills and Land Application Sites as identified by the Activity Code specified under Sector L in Table D-1 of Appendix D of the permit.

8.L.2 Industrial Activities Covered by Sector L.

This permit may authorize stormwater discharges for Sector L facilities associated with waste disposal at landfills, land application sites that receive or have received industrial waste, including sites subject to regulation under Subtitle D of RCRA. This permit does not cover discharges from landfills that receive only municipal wastes.

8.L.3 Limitations on Coverage.

8.L.3.1 ***Prohibition of Non-Stormwater Discharges.*** (See also Part 1.1.4) The following discharges are not authorized by this permit: leachate, gas collection condensate, drained free liquids, contaminated ground water, laboratory wastewater, and contact wash water from washing truck and railcar exteriors and surface areas that have come in direct contact with solid waste at the landfill facility. (EPA includes these prohibited non-stormwater discharges here solely as a helpful reminder to the operator that the only non-stormwater discharges authorized by this permit are at Part 1.1.3.)

8.L.3.2 ***Prohibition Stormwater Discharges from Open Dumps.*** Discharges from open dumps as defined under RCRA are also not authorized under this permit.

8.L.4 Definitions.

8.L.4.1 ***Contaminated stormwater*** – stormwater that comes into direct contact with landfill wastes, the waste handling and treatment areas, or landfill wastewater. Some areas of a landfill that may produce contaminated stormwater include (but are not limited to) the open face of an active landfill with exposed waste (no cover added); the areas around wastewater treatment operations; trucks, equipment, or machinery that has been in direct contact with the waste; and waste dumping areas.

8.L.4.2 ***Drained free liquids*** – aqueous wastes drained from waste containers (e.g., drums) prior to landfilling.

8.L.4.3 ***Landfill wastewater*** – as defined in 40 CFR Part 445 (Landfills Point Source Category) all wastewater associated with, or produced by, landfilling activities except for sanitary wastewater, non-contaminated stormwater, contaminated ground water, and wastewater from recovery pumping wells. Landfill process wastewater includes, but is not limited to, leachate; gas collection condensate; drained free liquids; laboratory-derived wastewater; contaminated stormwater; and contact wash water from washing truck, equipment, and railcar exteriors and surface areas that have come in direct contact with solid waste at the landfill facility.

8.L.4.4 ***Leachate*** – liquid that has passed through or emerged from solid waste and contains soluble, suspended, or miscible materials removed from such waste.

8.L.4.5 ***Non-contaminated stormwater*** – stormwater that does not come into direct contact with landfill wastes, the waste handling and treatment areas, or landfill wastewater. Non-contaminated stormwater includes stormwater that flows off the cap, cover, intermediate cover, daily cover, and/or final cover of the landfill.

8.L.5 Additional Technology-Based Effluent Limits.

8.L.5.1 ***Preventive Maintenance Program***. (See also Part 2.1.2.3) As part of your preventive maintenance program, maintain the following: all elements of leachate collection and treatment systems, to prevent commingling of leachate with stormwater; the integrity and effectiveness of any intermediate or final cover (including repairing the cover as necessary), to minimize the effects of settlement, sinking, and erosion.

8.L.5.2 ***Erosion and Sedimentation Control.*** (See also Part 2.1.2.5) Provide temporary stabilization (e.g., temporary seeding, mulching, and placing geotextiles on the inactive portions of stockpiles) for the following in order to minimize discharges of pollutants in stormwater: materials stockpiled for daily, intermediate, and final cover; inactive areas of the landfill or open dump; landfills or open dump areas that have gotten final covers but where vegetation has yet to establish itself; and land application sites where waste application has been completed but final vegetation has not yet been established.

8.L.6 Additional SWPPP Requirements.

8.L.5.1 ***Drainage Area Site Map.*** (See also Part 5.2.2) Document in your SWPPP where any of the following may be exposed to precipitation or surface runoff: active and closed landfill cells or trenches, active and closed land application areas, locations where open dumping is occurring or has occurred, locations of any known leachate springs or other areas where uncontrolled leachate may commingle with runoff, and leachate collection and handling systems.

8.L.5.2 ***Summary of Potential Pollutant Sources***. (See also Part 5.2.3) Document in your SWPPP the following sources and activities that have potential pollutants associated with them: fertilizer, herbicide, and pesticide application; earth and soil moving; waste hauling and loading or unloading; outdoor storage of significant materials, including daily, interim, and final cover material stockpiles as well as temporary waste storage areas; exposure of active and inactive landfill and land application areas; uncontrolled leachate flows; and failure or leaks from leachate collection and treatment systems.

8.L.7 Additional Inspection Requirements. (See also Part 3)

8.L.7.1 ***Inspections of Active Sites***. Except in arid and semi-arid climates, inspect operating landfills, open dumps, and land application sites at least once every 7 days. Focus on areas of landfills that have not yet been finally stabilized; active land application areas, areas used for storage of material and wastes that are exposed to precipitation, stabilization, and structural control measures; leachate collection and treatment systems; and locations where equipment and waste trucks enter and exit the site. Ensure that sediment and erosion control measures are operating properly. For stabilized sites and areas where land application has been completed, or where the climate is arid or semi-arid, conduct inspections at least once every month.

8.L.7.2 ***Inspections of Inactive Sites.*** Inspect inactive landfills, open dumps, and land application sites at least quarterly. Qualified personnel must inspect landfill (or open dump) stabilization and structural erosion control measures, leachate collection and treatment systems, and all closed land application areas.

8.L.8 Additional Post-Authorization Documentation Requirements.

8.L.8.1 ***Recordkeeping and Internal Reporting.*** Keep records with your SWPPP of the types of wastes disposed of in each cell or trench of a landfill or open dump. For land application sites, track the types and quantities of wastes applied in specific areas.

8.L.9 Sector-Specific Benchmarks. (See also Part 6)

Table 8.L-1 identifies benchmarks that apply to the specific subsectors of Sector L. These benchmarks apply to both your primary industrial activity and any co-located industrial activities.

Table 8.L-1.

Subsector (You may be subject to requirements for more than one sector/subsector)	Parameter	Benchmark Monitoring Concentration[1]
Subsector L1. All Landfill, Land Application Sites and Open Dumps (Industrial Activity Code "LF")	Total Suspended Solids (TSS)	100 mg/L
Subsector L2. All Landfill, Land Application Sites and Open Dumps, except Municipal Solid Waste Landfill (MSWLF) Areas Closed in Accordance with 40 CFR 258.60 (Industrial Activity Code "LF")	Total Iron	1.0 mg/L

[1]Benchmark monitoring required only for discharges not subject to effluent limitations in 40 CFR Part 445 Subpart B (see Table L-2 below).

8.L.10. Effluent Limitations Based on Effluent Limitations Guidelines. (See also Part 6.2.2.1)

Table 8.L-2 identifies effluent limitations that apply to the industrial activities described below. Compliance with these effluent limitations is to be determined based on discharges from these industrial activities independent of commingling with any other waste streams that may be covered under this permit.

Table 8.L-2[1]

Industrial Activity	Parameter	Effluent Limitation
Discharges from non-hazardous waste landfills subject to effluent limitations in 40 CFR Part 445 Subpart B.	Biochemical Oxygen Demand (BOD_5)	140 mg/L, daily maximum
		37 mg/L, monthly avg. maximum
	Total Suspended Solids (TSS)	88 mg/L, daily maximum
		27 mg/L, monthly avg. maximum
	Ammonia	10 mg/L, daily maximum
		4.9 mg/L, monthly avg. maximum
	Alpha Terpineol	0.033 mg/L, daily maximum
		0.016 mg/L monthly avg. maximum
	Benzoic Acid	0.12 mg/L, daily maximum
		0.071 mg/L, monthly avg. maximum
	p-Cresol	0.025 mg/L, daily maximum
		0.014 mg/L, monthly avg. maximum

Table 8.L-2[1]		
Industrial Activity	**Parameter**	**Effluent Limitation**
	Phenol	0.026 mg/L, daily maximum
		0.015 mg/L, monthly avg. maximum
	Total Zinc	0.20 mg/L, daily maximum
		0.11 mg/L, monthly avg. maximum
	pH	Within the range of 6-9 standard pH units (s.u.)

[1] Monitor annually. As set forth at 40 CFR Part 445 Subpart B, these numeric limitations apply to contaminated stormwater discharges from MSWLFs that have not been closed in accordance with 40 CFR 258.60, and to contaminated stormwater discharges from those landfills that are subject to the provisions of 40 CFR Part 257 except for discharges from any of the following facilities:

(a) landfills operated in conjunction with other industrial or commercial operations, when the landfill receives only wastes generated by the industrial or commercial operation directly associated with the landfill;

(b) landfills operated in conjunction with other industrial or commercial operations, when the landfill receives wastes generated by the industrial or commercial operation directly associated with the landfill and also receives other wastes, provided that the other wastes received for disposal are generated by a facility that is subject to the same provisions in 40 CFR Subchapter N as the industrial or commercial operation, or that the other wastes received are of similar nature to the wastes generated by the industrial or commercial operation;

(c) landfills operated in conjunction with CWT facilities subject to 40 CFR Part 437, so long as the CWT facility commingles the landfill wastewater with other non-landfill wastewater for discharge. A landfill directly associated with a CWT facility is subject to this part if the CWT facility discharges landfill wastewater separately from other CWT wastewater or commingles the wastewater from its landfill only with wastewater from other landfills; or

(d) landfills operated in conjunction with other industrial or commercial operations when the landfill receives wastes from public service activities, so long as the company owning the landfill does not receive a fee or other remuneration for the disposal service.

Part 8 – Sector-Specific Requirements for Industrial Activity

Subpart M – Sector M – Automobile Salvage Yards.

You must comply with Part 8 sector-specific requirements associated with your primary industrial activity and any co-located industrial activities, as defined in Appendix A. The sector-specific requirements apply to those areas of your facility where those sector-specific activities occur. These sector-specific requirements are in addition to any requirements specified elsewhere in this permit.

8.M.1 Covered Stormwater Discharges.

The requirements in Subpart M apply to stormwater discharges associated with industrial activity from Automobile Salvage Yards as identified by the SIC Code specified under Sector M in Table D-1 of Appendix D of this permit.

8.M.2 Additional Technology-Based Effluent Limits.

8.M.2.1 ***Spill and Leak Prevention Procedures.*** (See also Part 2.1.2.4) Drain vehicles intended to be dismantled of all fluids upon arrival at the site (or as soon thereafter as practicable), or employ some other equivalent means to prevent spills and leaks.

8.M.2.2 ***Employee Training.*** (See also Part 2.1.2.8) If applicable to your facility, address the following areas (at a minimum) in your employee training program: proper handling (collection, storage, and disposal) of oil, used mineral spirits, anti-freeze, mercury switches, and solvents.

8.M.2.3 ***Management of Runoff.*** (See also Part 2.1.2.6) Implement control measures to minimize discharges of pollutants in runoff such as the following, where determined to be feasible (list not exclusive): berms or drainage ditches on the property line (to help prevent run-on from neighboring properties); berms for uncovered outdoor storage of oily parts, engine blocks, and above-ground liquid storage; installation of detention ponds; and installation of filtering devices and oil and water separators.

8.M.3 Additional SWPPP Requirements.

8.M.3.1 ***Drainage Area Site Map.*** (See also Part 5.2.2) Identify locations used for dismantling, storing, and maintaining used motor vehicle parts. Also identify where any of the following may be exposed to precipitation or surface runoff: dismantling areas, parts (e.g., engine blocks, tires, hub caps, batteries, hoods, mufflers) storage areas, and liquid storage tanks and drums for fuel and other fluids.

8.M.3.2 ***Potential Pollutant Sources.*** (See also Part 5.2.3) Assess the potential for the following to contribute pollutants to stormwater discharges: vehicle storage areas, dismantling areas, parts storage areas (e.g., engine blocks, tires, hub caps, batteries, hoods, mufflers), and fueling stations.

8.M.4 Additional Inspection Requirements. (See also Part 3.1)

Immediately (or as soon thereafter as practicable) inspect vehicles arriving at the site for leaks. Inspect quarterly for signs of leakage all equipment containing oily parts, hydraulic fluids, any other types of fluids, or mercury switches. Also, inspect quarterly for signs of leakage all vessels and areas where hazardous materials and general automotive fluids are stored, including, but not limited to, mercury switches, brake fluid, transmission fluid, radiator water, and antifreeze.

8.M.5 Sector-Specific Benchmarks. (See also Part 6)

Table 8.M-1 identifies benchmarks that apply to Sector M. These benchmarks apply to both your primary industrial activity and any co-located industrial activities.

Table 8.M-1.		
Subsector (You may be subject to requirements for more than one sector/subsector)	**Parameter**	**Benchmark Monitoring Concentration**
Subsector M1. Automobile Salvage Yards (SIC 5015)	Total Suspended Solids (TSS)	100 mg/L
	Total Aluminum	0.75 mg/L
	Total Iron	1.0 mg/L
	Total Lead (freshwater)[2] Total Lead (saltwater)[1]	Hardness Dependent 0.21 mg/L

[1]Saltwater benchmark values apply to stormwater discharges into saline waters where indicated.
[2] The freshwater benchmark values of some metals are dependent on water hardness. For these parameters, permittees must determine the hardness of the receiving water (see Appendix J, "Calculating Hardness in Receiving Waters for Hardness Dependent Metals," for methodology), in accordance with Part 6.2.1.1, to identify the applicable 'hardness range' for determining their benchmark value applicable to their facility. Hardness Dependent Benchmarks follow in the table below:

Freshwater Hardness Range	**Lead** (mg/L)
0-24.99 mg/L	0.014
25-49.99 mg/L	0.023
50-74.99 mg/L	0.045
75-99.99 mg/L	0.069
100-124.99 mg/L	0.095
125-149.99 mg/L	0.122
150-174.99 mg/L	0.151
175-199.99 mg/L	0.182
200-224.99 mg/L	0.213
225-249.99 mg/L	0.246
250+ mg/L	0.262

Part 8 – Sector-Specific Requirements for Industrial Activity

Subpart N – Sector N – Scrap Recycling and Waste Recycling Facilities.

You must comply with Part 8 sector-specific requirements associated with your primary industrial activity and any co-located industrial activities, as defined in Appendix A. The sector-specific requirements apply to those areas of your facility where those sector-specific activities occur. These sector-specific requirements are in addition to any requirements specified elsewhere in this permit.

8.N.1 Covered Stormwater Discharges.

The requirements in Subpart N apply to stormwater discharges associated with industrial activity from Scrap Recycling and Waste Recycling facilities as identified by the SIC Code specified under Sector N in Table D-1 of Appendix D of the permit.

8.N.2 Limitation on Coverage.

Separate permit requirements have been established for recycling facilities that receive, process, and do wholesale distribution of only source-separated recyclable materials primarily from non-industrial and residential sources (i.e., common consumer products including paper, newspaper, glass, cardboard, plastic containers, and aluminum and tin cans). This includes recycling facilities commonly referred to as material recovery facilities (MRF). See Part 8.N.3.3.

8.N.2.1 ***Prohibition of Non-Stormwater Discharges.*** (See also Part 1.1.4) Non-stormwater discharges from turnings containment areas are not covered by this permit (see also Part 8.N.3.1.3). Discharges from containment areas in the absence of a storm event are prohibited unless covered by a separate NPDES permit. (EPA includes these prohibited non-stormwater discharges here solely as a helpful reminder to the operator that the only non-stormwater discharges authorized by this permit are at Part 1.1.3.)

8.N.3 Additional Technology-Based Effluent Limits.

8.N.3.1 ***Scrap and Waste Recycling Facilities (Non-Source Separated, Nonliquid Recyclable Materials).*** The following requirements are for facilities that receive, process, and do wholesale distribution of non-source separated, nonliquid recyclable wastes (e.g., ferrous and nonferrous metals, plastics, glass, cardboard, and paper). These facilities may receive both nonrecyclable and recyclable materials. This section is not intended for those facilities that accept recyclables only from primarily non-industrial and residential sources.

8.N.3.1.1 ***Inbound Recyclable and Waste Material Control Program.*** Minimize the chance of accepting materials that could be significant sources of pollutants by conducting inspections of inbound recyclables and waste materials and through implementation of control measures such as the following, where determined to be feasible (list not exclusive): providing information and education to suppliers of scrap and recyclable waste materials on draining and properly disposing of residual fluids (e.g., from vehicles and equipment engines, radiators and transmissions, oil filled transformers, and individual containers or drums) and removal of mercury switches from vehicles before delivery to your facility; establishing procedures to minimize the potential of any residual fluids from coming into contact with precipitation or runoff; establishing procedures for accepting scrap lead-acid batteries (additional requirements for the handling, storage, and disposal or recycling of batteries are contained in the scrap lead-acid battery program provisions in Part 8.N.3.1.6); providing training targeted for those personnel engaged in the inspection and acceptance of inbound recyclable materials; and

establishing procedures to ensure that liquid wastes, including used oil, are stored in materially compatible and non-leaking containers and are disposed of or recycled in accordance with the Resource Conservation and Recovery Act (RCRA).

8.N.3.1.2 ***Scrap and Waste Material Stockpiles and Storage (Outdoor).*** Minimize contact of stormwater runoff with stockpiled materials, processed materials, and nonrecyclable wastes through implementation of control measures such as the following, where determined to be feasible (list not exclusive): permanent or semi-permanent covers; sediment traps, vegetated swales and strips, catch basin filters, and sand filters to facilitate settling or filtering of pollutants; dikes, berms, containment trenches, culverts, and surface grading to divert runoff from storage areas; silt fencing; and oil and water separators, sumps, and dry absorbents for areas where potential sources of residual fluids are stockpiled (e.g., automobile engine storage areas).

8.N.3.1.3 ***Stockpiling of Turnings Exposed to Cutting Fluids (Outdoor Storage)***. Minimize contact of surface runoff with residual cutting fluids by storing all turnings exposed to cutting fluids under some form of permanent or semi-permanent cover, or establishing dedicated containment areas for all turnings that have been exposed to cutting fluids. Any containment areas must be constructed of concrete, asphalt, or other equivalent types of impermeable material and include a barrier (e.g., berms, curbing, elevated pads) to prevent contact with stormwater run-on. Stormwater runoff from these areas can be discharged, provided that any runoff is first collected and treated by an oil and water separator or its equivalent. You must regularly maintain the oil and water separator (or its equivalent) and properly dispose of or recycle collected residual fluids.

8.N.3.1.4 ***Scrap and Waste Material Stockpiles and Storage (Covered or Indoor Storage).*** Minimize contact of residual liquids and particulate matter from materials stored indoors or under cover with surface runoff through implementation of control measures such as the following, where determined to be feasible (list not exclusive): good housekeeping measures, including the use of dry absorbents or wet vacuuming to contain, dispose of, or recycle residual liquids originating from recyclable containers, and mercury spill kits for spills from storage of mercury switches; not allowing wash water from tipping floors or other processing areas to discharge to the storm sewer system; and disconnecting or sealing off all floor drains connected to the storm sewer system.

8.N.3.1.5 ***Scrap and Recyclable Waste Processing Areas.*** Minimize surface runoff from coming in contact with scrap processing equipment. Pay attention to operations that generate visible amounts of particulate residue (e.g., shredding) to minimize the contact of accumulated particulate matter and residual fluids with runoff (i.e., through good housekeeping, preventive maintenance). To minimize discharges of pollutants in stormwater from scrap and recyclable waste processing areas, implement control measures such as the following, where determined to be feasible (list not exclusive): at least once per month inspecting equipment for spills or leaks and malfunctioning, worn, or corroded parts or equipment; establishing a preventive maintenance program for processing equipment; using dry-absorbents or other cleanup practices to collect and dispose of or recycle spilled or leaking fluids or use mercury spill kits for spills from storage of mercury switches; on unattended

hydraulic reservoirs over 150 gallons in capacity, installing protection devices such as low-level alarms or equivalent devices, or secondary containment that can hold the entire volume of the reservoir; implementing containment or diversion structures such as dikes, berms, culverts, trenches, elevated concrete pads, and grading to minimize contact of stormwater runoff with outdoor processing equipment or stored materials; using oil and water separators or sumps; installing permanent or semi-permanent covers in processing areas where there are residual fluids and grease; and using retention or detention ponds or basins, sediment traps, vegetated swales or strips, and/or catch basin filters or sand filters for pollutant settling and filtration.

8.N.3.1.6 ***Scrap Lead-Acid Battery Program.*** To minimize the discharge of pollutants in stormwater from lead-acid batteries, properly handle, store, and dispose of scrap lead-acid batteries, and implement control measures such as the following, where determined to be feasible (list not exclusive): segregating scrap lead-acid batteries from other scrap materials; properly handling, storing, and disposing of cracked or broken batteries; collecting and disposing of leaking lead-acid battery fluid; minimizing or eliminating (if possible) exposure of scrap lead-acid batteries to precipitation or runoff; and providing employee training for the management of scrap batteries.

8.N.3.1.7 ***Spill Prevention and Response Procedures.*** (See also Part 2.1.2.4) Install alarms and/or pump shutoff systems on outdoor equipment with hydraulic reservoirs exceeding 150 gallons in the event of a line break. Alternatively, a secondary containment system capable of holding the entire contents of the reservoir plus room for precipitation can be used. Use a mercury spill kit for any release of mercury from switches, anti-lock brake systems, and switch storage areas.

8.N.3.1.8 ***Supplier Notification Program.*** As appropriate, notify major suppliers which scrap materials will not be accepted at the facility or will be accepted only under certain conditions.

8.N.3.2 ***Waste Recycling Facilities*** (Liquid Recyclable Materials).

8.N.3.2.1 ***Waste Material Storage (Indoor).*** Minimize or eliminate contact between residual liquids from waste materials stored indoors and from surface runoff. The plan may refer to applicable portions of other existing plans, such as Spill Prevention, Control, and Countermeasure (SPCC) plans required under 40 CFR Part 112. To minimize discharges of pollutants in stormwater from indoor waste material storage areas, implement control measures such as the following, where determined to be feasible (list not exclusive): implementing procedures for material handling (including labeling and marking); cleaning up spills and leaks with dry absorbent materials and/or a wet vacuum system; installing appropriate containment structures (e.g., trenching, curbing, gutters, etc.); and installing a drainage system, including appurtenances (e.g., pumps or ejectors, manually operated valves), to handle discharges from diked or bermed areas. Drainage should be discharged to an appropriate treatment facility or sanitary sewer system, or otherwise disposed of properly. These discharges may require coverage under a separate NPDES wastewater permit or industrial user permit under the pretreatment program.

8.N.3.2.2 ***Waste Material Storage (Outdoor).*** Minimize contact between stored residual liquids and precipitation or runoff. The plan may refer to applicable portions of other existing plans, such as SPCC plans required under 40 CFR Part 112.

Discharges of stormwater from containment areas containing used oil must also be in accordance with applicable sections of 40 CFR Part 112. To minimize discharges of pollutants in stormwater from outdoor waste material storage areas, implement control measures such as the following, where determined to be feasible (list not exclusive): appropriate containment structures (e.g., dikes, berms, curbing, pits) to store the volume of the largest tank, with sufficient extra capacity for precipitation; drainage control and other diversionary structures; corrosion protection and/or leak detection systems for storage tanks; and dry-absorbent materials or a wet vacuum system to collect spills.

8.N.3.2.3 ***Trucks and Rail Car Waste Transfer Areas.*** Minimize pollutants in stormwater discharges from truck and rail car loading and unloading areas. Include measures to clean up minor spills and leaks resulting from the transfer of liquid wastes. To minimize discharges of pollutants in stormwater from truck and rail car waste transfer areas, implement control measures such as the following, where determined to be feasible (list not exclusive): containment and diversionary structures to minimize contact with precipitation or runoff; and dry clean-up methods, wet vacuuming, roof coverings, and/or runoff controls.

8.N.3.3 ***Recycling Facilities (Source-Separated Materials).*** The following requirements are for facilities that receive only source-separated recyclables, primarily from non-industrial and residential sources.

8.N.3.3.1 ***Inbound Recyclable Material Control.*** Minimize the chance of accepting nonrecyclables (e.g., hazardous materials) that could be a significant source of pollutants by conducting inspections of inbound materials and through the implementation of control measures such as the following, where determined to be feasible (list not exclusive): providing information and education measures to inform suppliers of recyclables about acceptable and non-acceptable materials; training drivers responsible for pickup of recycled material; clearly marking public drop-off containers regarding which materials can be accepted; rejecting nonrecyclable wastes or household hazardous wastes at the source; and establishing procedures for handling and disposal of nonrecyclable material.

8.N.3.3.2 ***Outdoor Storage.*** Minimize exposure of recyclables to precipitation and runoff by using good housekeeping measures to prevent accumulation of particulate matter and fluids, particularly in high traffic areas and through implementation of control measure such as the following, where determined to be feasible (list not exclusive): providing totally enclosed drop-off containers for the public; installing a sump and pump with each container pit and treat or discharge collected fluids to a sanitary sewer system; providing dikes and curbs for secondary containment (e.g., around bales of recyclable waste paper); diverting surface water runoff away from outside material storage areas; providing covers over containment bins, dumpsters, and roll-off boxes; and storing the equivalent of one day's volume of recyclable material indoors.

8.N.3.3.3 ***Indoor Storage and Material Processing.*** Minimize the release of pollutants from indoor storage and processing areas through implementation of control measures such as the following, where determined to be feasible (list not exclusive): scheduling routine good housekeeping measures for all storage and processing areas; prohibiting tipping floor wash water from draining to

the storm sewer system; and providing employee training on pollution prevention practices.

8.N.3.3.4 ***Vehicle and Equipment Maintenance***. Minimize the discharge of pollutants in stormwater from areas where vehicle and equipment maintenance occur outdoors through implementation of control measures such as the following, where determined to be feasible (list not exclusive): minimizing or eliminating outdoor maintenance areas; establishing spill prevention and clean-up procedures in fueling areas; avoiding topping off fuel tanks; diverting runoff from fueling areas; storing lubricants and hydraulic fluids indoors; and providing employee training on proper handling and storage of hydraulic fluids and lubricants.

8.N.4 Additional SWPPP Requirements.

8.N.4.1 ***Drainage Area Site Map.*** (See also Part 5.2.2) Document in your SWPPP the locations of any of the following activities or sources that may be exposed to precipitation or surface runoff: scrap and waste material storage; outdoor scrap and waste processing equipment; and containment areas for turnings exposed to cutting fluids.

8.N.4.2 ***Maintenance Schedules/Procedures for Collection, Handling, and Disposal or Recycling of Residual Fluids at Scrap and Waste Recycling Facilities.*** If you are subject to Part 8.N.3.1.3, your SWPPP must identify any applicable maintenance schedule and the procedures to collect, handle, and dispose of or recycle residual fluids.

8.N.5 Additional Inspection Requirements.

8.N.5.1 ***Inspections for Waste Recycling Facilities.*** The inspections must be performed quarterly, per Part 3.1, and include, at a minimum, all areas where waste is generated, received, stored, treated, or disposed of and that are exposed to either precipitation or stormwater runoff.

8.N.6 Sector-Specific Benchmarks. (See also Part 6)

Table 8.N-1 identifies benchmarks that apply to Sector N. These benchmarks apply to both your primary industrial activity and any co-located industrial activities.

Table 8.N-1.		
Subsector (You may be subject to requirements for more than one sector/subsector)	**Parameter**	**Benchmark Monitoring Concentration**
Subsector N1. Scrap Recycling and Waste Recycling Facilities except those only receiving source-separate recyclable materials primarily from non-industrial and residential sources (SIC 5093)	Chemical Oxygen Demand (COD)	120 mg/L
	Total Suspended Solids (TSS)	100 mg/L
	Aluminum Total Recoverable	0.75 mg/L
	Total Copper (freshwater)[2] Total Copper (saltwater)[1]	Hardness Dependent 0.0048 mg/L
	Total Recoverable Iron	1.0 mg/L
	Total Lead (freshwater)[2] Total Lead (saltwater)[1]	Hardness Dependent 0.21 mg/L
	Total Zinc (freshwater)[2] Total Zinc (saltwater)[1]	Hardness Dependent 0.09 mg/L

[1]Saltwater benchmark values apply to stormwater discharges into saline waters where indicated.
[2] The freshwater benchmark values of some metals are dependent on water hardness. For these parameters, permittees must determine the hardness of the receiving water (see Appendix J, "Calculating Hardness in Receiving Waters for Hardness Dependent Metals," for methodology), in accordance with Part 6.2.1.1, to identify the applicable 'hardness range' for determining their benchmark value applicable to their facility. Hardness Dependent Benchmarks follow in the table below:

Freshwater Hardness Range	**Copper** (mg/L)	**Lead** (mg/L)	**Zinc** (mg/L)
0-24.99 mg/L	0.0038	0.014	0.04
25-49.99 mg/L	0.0056	0.023	0.05
50-74.99 mg/L	0.0090	0.045	0.08
75-99.99 mg/L	0.0123	0.069	0.11
100-124.99 mg/L	0.0156	0.095	0.13
125-149.99 mg/L	0.0189	0.122	0.16
150-174.99 mg/L	0.0221	0.151	0.18
175-199.99 mg/L	0.0253	0.182	0.20
200-224.99 mg/L	0.0285	0.213	0.23
225-249.99 mg/L	0.0316	0.246	0.25
250+ mg/L	0.0332	0.262	0.26

Part 8 – Sector-Specific Requirements for Industrial Activity

Subpart O – Sector O – Steam Electric Generating Facilities.

You must comply with Part 8 sector-specific requirements associated with your primary industrial activity and any co-located industrial activities, as defined in Appendix A. The sector-specific requirements apply to those areas of your facility where those sector-specific activities occur. These sector-specific requirements are in addition to any requirements specified elsewhere in this permit.

8.O.1 Covered Stormwater Discharges.

The requirements in Subpart O apply to stormwater discharges associated with industrial activity from Steam Electric Power Generating Facilities as identified by the Activity Code specified under Sector O in Table D-1 of Appendix D.

8.O.2 Industrial Activities Covered by Sector O.

This permit authorizes stormwater discharges from the following industrial activities at Sector O facilities:

8.O.2.1 ***Steam electric power generation using coal, natural gas, oil, nuclear energy, etc., to produce a steam source, including coal handling areas (does not include geothermal power);***

8.O.2.2 ***Coal pile runoff, including effluent limitations established by 40 CFR Part 423;***

8.O.2.3 Dual fuel facilities that could employ a steam boiler.

8.O.3 Limitations on Coverage.

8.O.3.1 ***Prohibition of Non-Stormwater Discharges.*** Non-stormwater discharges subject to effluent limitations guidelines are not covered by this permit. (EPA includes these prohibited non-stormwater discharges here solely as a helpful reminder to the operator that the only non-stormwater discharges authorized by this permit are at Part 1.1.3.)

8.O.3.2 ***Prohibition of Stormwater Discharges.*** Stormwater discharges from the following are not covered by this permit:

8.O.3.2.1 ***Ancillary facilities (e.g., fleet centers and substations) that are not contiguous to a steam electric power generating facility;***

8.O.3.2.2 ***Gas turbine facilities (provided the facility is not a dual-fuel facility that includes a steam boiler), and combined-cycle facilities where no supplemental fuel oil is burned (and the facility is not a dual-fuel facility that includes a steam boiler);***

8.O.3.2.3 ***Cogeneration (combined heat and power) facilities utilizing a gas turbine.***

8.O.4 Additional Technology-Based Effluent Limits. The following good housekeeping measures are required in addition to Part 2.1.2.2:

8.O.4.1 ***Fugitive Dust Emissions.*** Minimize fugitive dust emissions from coal handling areas to minimize the tracking of coal dust offsite that could be discharged in stormwater through implementation of control measures such as the following, where determined to be feasible, (list not exclusive): installing specially designed tires; and washing vehicles in a designated area before they leave the site and controlling the wash water.

8.O.4.2 ***Delivery Vehicles.*** Minimize contamination of stormwater runoff from delivery vehicles arriving at the plant site. Implement procedures to inspect delivery vehicles arriving at the plant site as necessary to minimize discharges of pollutants in stormwater. Ensure the overall integrity of the body or container of the delivery vehicle and implement procedures to deal with leakage or spillage from delivery vehicles.

8.O.4.3 ***Fuel Oil Unloading Areas.*** Minimize contamination of precipitation or surface runoff from fuel oil unloading areas. Use containment curbs in unloading areas where feasible. In addition, ensure personnel familiar with spill prevention and response procedures are available to respond expeditiously in the event of a leak or spill during deliveries. Ensure that any leaks or spills are immediately contained and cleaned up, and use spill and overflow protection devices (e.g., drip pans, drip diapers, or other containment devices placed beneath fuel oil connectors to contain potential spillage during deliveries or from leaks at the connectors).

8.O.4.4 ***Chemical Loading and Unloading***. Minimize contamination of precipitation or surface runoff from chemical loading and unloading areas. Use containment curbs at chemical loading and unloading areas to contain spills, where practicable. In addition, ensure personnel familiar with spill prevention and response procedures are available to respond expeditiously in the event of a leak or spill during deliveries. Ensure leaks and spills are immediately contained and cleaned up and, where practicable, load and unload in covered areas and store chemicals indoors.

8.O.4.5 ***Miscellaneous Loading and Unloading Areas.*** Minimize contamination of precipitation or surface runoff from loading and unloading areas through implementation of control measures such as the following, where determined to be feasible (list not exclusive): covering the loading area; grading, curbing, or berming around the loading area to divert run-on; locating the loading and unloading equipment and vehicles so that leaks are contained in existing containment and flow diversion systems; or equivalent procedures.

8.O.4.6 ***Liquid Storage Tanks***. Minimize contamination of surface runoff from above-ground liquid storage tanks through implementation of control measures such as the following, where determined to be feasible, the following (list not exclusive): using protective guards around tanks; using containment curbs; installing spill and overflow protection; using dry cleanup methods; or equivalent measures.

8.O.4.7 ***Large Bulk Fuel Storage Tanks.*** Minimize contamination of surface runoff from large bulk fuel storage tanks. Use containment berms (or their equivalent). You must also comply with applicable state and federal laws, including Spill Prevention, Control and Countermeasure (SPCC) Plan requirements.

8.O.4.8 ***Spill Reduction Measures.*** Minimize the potential for an oil or chemical spill, or reference the appropriate part of your SPCC plan. Visually inspect as part of your routine facility inspection the structural integrity of all above-ground tanks, pipelines, pumps, and related equipment that may be exposed to stormwater, and make any necessary repairs immediately.

8.O.4.9 ***Oil-Bearing Equipment in Switchyards***. Minimize contamination of surface runoff from oil-bearing equipment in switchyard areas. Use level grades and gravel surfaces to retard flows and limit the spread of spills, or collect runoff in perimeter ditches.

8.O.4.10 ***Residue-Hauling Vehicles.*** Inspect all residue-hauling vehicles for proper covering over the load, adequate gate sealing, and overall integrity of the container body. Repair vehicles without load covering or adequate gate sealing, or with leaking containers or beds.

8.O.4.11 ***Ash Loading Areas***. Reduce or control the tracking of ash and residue from ash loading areas. Clear the ash building floor and immediately adjacent roadways of spillage, debris, and excess water as necessary to minimize discharges of pollutants in stormwater.

8.O.4.12 ***Areas Adjacent to Disposal Ponds or Landfills.*** Minimize contamination of surface runoff from areas adjacent to disposal ponds or landfills. Reduce ash residue that may be tracked on to access roads traveled by residue handling vehicles, and reduce ash residue on exit roads leading into and out of residue handling areas.

8.O.4.13 ***Landfills, Scrap Yards, Surface Impoundments, Open Dumps, General Refuse Sites.*** Minimize the potential for contamination of runoff from these areas.

8.O.5 Additional SWPPP Requirements.

8.O.5.1 ***Drainage Area Site Map.*** (See also Part 5.2.2) Document in your SWPPP the locations of any of the following activities or sources that may be exposed to precipitation or surface runoff: storage tanks, scrap yards, and general refuse areas; short- and long-term storage of general materials (including but not limited to supplies, construction materials, paint equipment, oils, fuels, used and unused solvents, cleaning materials, paint, water treatment chemicals, fertilizer, and pesticides); landfills and construction sites; and stock pile areas (e.g., coal or limestone piles).

8.O.5.2 ***Documentation of Good Housekeeping Measures.*** You must document in your SWPPP the good housekeeping measures implemented to meet the effluent limits in Part 8.O.4.

8.O.6 Additional Inspection Requirements.

As part of your inspection, inspect the following areas monthly: coal handling areas, loading or unloading areas, switchyards, fueling areas, bulk storage areas, ash handling areas, areas adjacent to disposal ponds and landfills, maintenance areas, liquid storage tanks, and long term and short term material storage areas.

8.O.7 Sector-Specific Benchmarks. (See also Part 6)

Table 8.O-1 identifies benchmarks that apply to Sector O. These benchmarks apply to both your primary industrial activity and any co-located industrial activities.

Table 8.O-1.

Subsector (You may be subject to requirements for more than one sector/subsector)	Parameter	Benchmark Monitoring Concentration
Subsector O1. Steam Electric Generating Facilities (Industrial Activity Code "SE")	Total Iron	1.0 mg/L

8.O.8 Effluent Limitations Based on Effluent Limitations Guidelines. (See also Part 6.2.2.1)

Table 8.O-2 identifies effluent limits that apply to the industrial activities described below. Compliance with these effluent limits is to be determined based on discharges from these industrial activities independent of commingling with any other waste streams that may be covered under this permit.

Table 8.O-2[1]		
Industrial Activity	**Parameter**	**Effluent Limitation**
Discharges from coal storage piles at Steam Electric Generating Facilities	TSS	50 mg/l[2]
	pH	6.0 min - 9.0 max

[1] Monitor annually.
[2] If your facility is designed, constructed, and operated to treat the volume of coal pile runoff that is associated with a 10-year, 24-hour rainfall event, any untreated overflow of coal pile runoff from the treatment unit is not subject to the 50 mg/L limitation for total suspended solids.

Part 8 – Sector-Specific Requirements for Industrial Activity

Subpart P – Sector P – Land Transportation and Warehousing.

You must comply with Part 8 sector-specific requirements associated with your primary industrial activity and any co-located industrial activities, as defined in Appendix A. The sector-specific requirements apply to those areas of your facility where those sector-specific activities occur. These sector-specific requirements are in addition to any requirements specified elsewhere in this permit.

8.P.1 Covered Stormwater Discharges.

The requirements in Subpart P apply to stormwater discharges associated with industrial activity from Land Transportation and Warehousing facilities as identified by the SIC Codes specified under Sector P in Table D-1 of Appendix D of the permit.

8.P.2 Limitation on Coverage.

8.P.2.1 ***Prohibited Discharges*** (see also Parts 1.1.4 and 8.P.3.1.4) This permit does not authorize the discharge of vehicle/equipment/surface wash water, including tank cleaning operations. Such discharges must be authorized under a separate NPDES permit, discharged to a sanitary sewer in accordance with applicable industrial pretreatment requirements, or recycled on-site.

8.P.3 Additional Technology-Based Effluent Limits.

8.P.3.1 ***Good Housekeeping Measures.*** (See also Part 2.1.2.2) In addition to the Good Housekeeping requirements in Part 2.1.2.2, you must do the following.

8.P.3.1.1 ***Vehicle and Equipment Storage Areas.*** Minimize the potential for stormwater exposure to leaky or leak-prone vehicles/equipment awaiting maintenance through implementation of control measures such as the following, where determined to be feasible (list not exclusive): using of drip pans under vehicles/equipment; storing vehicles and equipment indoors; installing berms or dikes; using of absorbents; roofing or covering storage areas; and cleaning pavement surfaces to remove oil and grease.

8.P.3.1.2 ***Fueling Areas.*** Minimize contamination of stormwater runoff from fueling areas through implementation of control measures such as the following, where determined to be feasible: covering the fueling area; using spill/overflow protection and cleanup equipment; minimizing stormwater run-on/runoff to the fueling area; using dry cleanup methods; and treating and/or recycling collected stormwater runoff.

8.P.3.1.3 ***Material Storage Areas.*** Maintain all material storage vessels (e.g., for used oil/oil filters, spent solvents, paint wastes, hydraulic fluids) to prevent contamination of stormwater and plainly label them (e.g., "Used Oil," "Spent Solvents"). To minimize discharges of pollutants in stormwater from material storage areas, implement control measures such as the following, where determined to be feasible (list not exclusive): storing the materials indoors; installing berms/dikes around the areas; minimizing runoff of stormwater to the areas; using dry cleanup methods; and treating and/or recycling collected stormwater runoff.

8.P.3.1.4 ***Vehicle and Equipment Cleaning Areas.*** Minimize contamination of stormwater runoff from all areas used for vehicle/equipment cleaning through implementation of control measures such as the following, where determined to be feasible (list not exclusive): performing all cleaning operations indoors;

covering the cleaning operation, ensuring that all wash water drains to a proper collection system (i.e., not the stormwater drainage system); treating and/or recycling collected wash water; or other equivalent measures. Discharges of vehicle and equipment wash water, including tank cleaning operations, are not authorized by this permit for this sector.

8.P.3.1.5 ***Vehicle and Equipment Maintenance Areas.*** Minimize contamination of stormwater runoff from all areas used for vehicle/equipment maintenance through implementation of control measures such as the following, where determined to be feasible (list not exclusive): performing maintenance activities indoors; using drip pans; keeping an organized inventory of materials used in the shop; draining all parts of fluid prior to disposal; prohibiting wet clean up practices if these practices would result in the discharge of pollutants to stormwater drainage systems; using dry cleanup methods; treating and/or recycling collected stormwater runoff; and minimizing run on/runoff of stormwater to maintenance areas.

8.P.3.1.6 ***Locomotive Sanding (Loading Sand for Traction) Areas.*** Minimize discharges of pollutants in stormwater from locomotive sanding areas through implementation of control measures such as the following, where determined to be feasible (list not exclusive): covering sanding areas; minimizing stormwater run on/runoff; or appropriate sediment removal practices to minimize the offsite transport of sanding material by stormwater.

8.P.3.2 ***Employee Training.*** (See also Part 2.1.2.8) Train personnel at least once a year and address the following activities, as applicable: used oil and spent solvent management; fueling procedures; general good housekeeping practices; proper painting procedures; and used battery management.

8.P.4 Additional SWPPP Requirements.

8.P.4.1 ***Drainage Area Site Map.*** (See also Part 5.2.2) Identify in the SWPPP the following areas of the facility and indicate whether activities occurring there may be exposed to precipitation/surface runoff: fueling stations; vehicle/equipment maintenance or cleaning areas; storage areas for vehicle/equipment with actual or potential fluid leaks; loading/unloading areas; areas where treatment, storage or disposal of wastes occur; liquid storage tanks; processing areas; and storage areas.

8.P.4.2 ***Potential Pollutant Sources.*** (See also Part 5.2.3) Assess the potential for the following activities and facility areas to contribute pollutants to stormwater discharges: onsite waste storage or disposal; dirt/gravel parking areas for vehicles awaiting maintenance; illicit plumbing connections between shop floor drains and the stormwater conveyance system(s); and fueling areas. Describe these activities in the SWPPP.

8.P.4.3 ***Description of Good Housekeeping Measures***. You must document in your SWPPP the good housekeeping measures you implement consistent with Part 8.P.3.

8.P.4.4 ***Vehicle and Equipment Wash Water Requirements.*** If wash water is handled in a manner that does not involve separate NPDES permitting (e.g., hauled offsite), describe the disposal method and include all pertinent information (e.g., frequency, volume, destination, etc.) in your SWPPP. Discharges of vehicle and equipment wash water, including tank cleaning operations, are not authorized by this permit for this sector.

8.P.5 Additional Inspection Requirements. (See also Part 3.1)

Inspect all the following areas/activities: storage areas for vehicles/equipment awaiting maintenance, fueling areas, indoor and outdoor vehicle/equipment maintenance areas, material storage areas, vehicle/equipment cleaning areas and loading/unloading areas.

Part 8 – Sector-Specific Requirements for Industrial Activity

Subpart Q – Sector Q – Water Transportation.

You must comply with Part 8 sector-specific requirements associated with your primary industrial activity and any co-located industrial activities, as defined in Appendix A. The sector-specific requirements apply to those areas of your facility where those sector-specific activities occur. These sector-specific requirements are in addition to any requirements specified elsewhere in this permit.

8.Q.1 Covered Stormwater Discharges.

The requirements in Subpart Q apply to stormwater discharges associated with industrial activity from Water Transportation facilities as identified by the SIC Codes specified under Sector Q in Table D-1 of Appendix D of the permit.

8.Q.2 Limitations on Coverage.

8.Q.2.1 ***Prohibition of Non-Stormwater Discharges.*** (See also Part 1.1.4) Not covered by this permit: discharges from vessels including bilge and ballast water, sanitary wastes, pressure wash water, and cooling water. Any discharge of pollutants from a point source to a water of the U.S. requires coverage under an NPDES permit. (EPA includes these prohibited non-stormwater discharges here solely as a helpful reminder to the operator that the only non-stormwater discharges authorized by this permit are at Part 1.1.3.)

8.Q.3 Additional Technology-Based Effluent Limits.

8.Q.3.1 ***Good Housekeeping Measures.*** You must implement the following good housekeeping measures in addition to the requirements of Part 2.1.2.2:

8.Q.3.1.1 ***Pressure Washing Area.*** If pressure washing is used to remove marine growth from vessels, the discharge water must be permitted by a separate NPDES permit. Collect or contain the discharges from the pressure washing area so that they are not commingled with stormwater discharges authorized by this permit.

8.Q.3.1.2 ***Blasting and Painting Area.*** Minimize the potential for spent abrasives, paint chips, and overspray to be discharged into receiving waters or the storm sewer system. Contain all blasting and painting activities, or use other measures, to minimize the discharge of contaminants (e.g., hanging plastic barriers or tarpaulins during blasting or painting operations to contain debris). At least once per month, you must clean stormwater conveyances of deposits of abrasive blasting debris and paint chips.

8.Q.3.1.3 ***Material Storage Areas.*** Store and plainly label all containerized materials (e.g., fuels, paints, solvents, waste oil, antifreeze, batteries) in a protected, secure location away from drains. Minimize the contamination of precipitation or surface runoff from the storage areas. Specify which materials are stored indoors, and contain or enclose or use other measures for those stored outdoors. If abrasive blasting is performed, discuss the storage and disposal of spent abrasive materials generated at the facility. Implement an inventory control plan to limit the presence of potentially hazardous materials onsite.

8.Q.3.1.4 ***Engine Maintenance and Repair Areas.*** Minimize the contamination of precipitation or surface runoff from all areas used for engine maintenance and repair through implementation of control measures such as the following,

where determined to be feasible (list not exclusive): performing all maintenance activities indoors; maintaining an organized inventory of materials used in the shop; draining all parts of fluid prior to disposal; prohibiting the practice of hosing down the shop floor; using dry cleanup methods; and treating and/or recycling stormwater runoff collected from the maintenance area.

8.Q.3.1.5 ***Material Handling Area.*** Minimize the contamination of precipitation or surface runoff from material handling operations and areas (e.g., fueling, paint and solvent mixing, disposal of process wastewater streams from vessels) through implementation of control measures such as the following, where determined to be feasible (list not exclusive): covering fueling areas; using spill and overflow protection; mixing paints and solvents in a designated area (preferably indoors or under a shed); and minimizing runoff of stormwater to material handling areas.

8.Q.3.1.6 ***Drydock Activities.*** Routinely maintain and clean the drydock to minimize dischrges of pollutants in stormwater. Address the cleaning of accessible areas of the drydock prior to flooding, and final cleanup following removal of the vessel and raising the dock. Include procedures for cleaning up oil, grease, and fuel spills occurring on the drydock. To minimize discharges of pollutants in stormwater from drydock activities, implement control measures such as the following, where determined to be feasible (list not exclusive): sweeping rather than hosing off debris and spent blasting material from accessible areas of the drydock prior to flooding; and making absorbent materials and oil containment booms readily available to clean up or contain any spills.

8.Q.3.2 ***Employee Training.*** (See also Part 2.1.2.8) As part of your employee training program, address, at a minimum, the following activities (as applicable): used oil management; spent solvent management; disposal of spent abrasives; disposal of vessel wastewaters; spill prevention and control; fueling procedures; general good housekeeping practices; painting and blasting procedures; and used battery management.

8.Q.3.3 ***Preventive Maintenance.*** (See also Part 2.1.2.3) As part of your preventive maintenance program, perform timely inspection and maintenance of stormwater management devices (e.g., cleaning oil and water separators and sediment traps to ensure that spent abrasives, paint chips, and solids will be intercepted and retained prior to entering the storm drainage system), as well as inspecting and testing facility equipment and systems to uncover conditions that could cause breakdowns or failures resulting in discharges of pollutants to surface waters.

8.Q.4 Additional SWPPP Requirements.

8.Q.4.1 ***Drainage Area Site Map.*** (See also Part 5.2.2) Document in your SWPPP where any of the following may be exposed to precipitation or surface runoff: fueling; engine maintenance and repair; vessel maintenance and repair; pressure washing; painting; sanding; blasting; welding; metal fabrication; loading and unloading areas; locations used for the treatment, storage, or disposal of wastes; liquid storage tanks; liquid storage areas (e.g., paint, solvents, resins); and material storage areas (e.g., blasting media, aluminum, steel, scrap iron).

8.Q.4.2 ***Summary of Potential Pollutant Sources.*** (See also Part 5.2.3) Document in the SWPPP the following additional sources and activities that have potential pollutants associated with them: outdoor manufacturing or processing activities (e.g., welding, metal

fabricating) and significant dust or particulate generating processes (e.g., abrasive blasting, sanding, and painting).

8.Q.5 Additional Inspection Requirements. (See also Part 3.1)

Include the following in all quarterly routine facility inspections: pressure washing areas; blasting, sanding, and painting areas; material storage areas; engine maintenance and repair areas; material handling areas; drydock area; and general yard area.

8.Q.6 Sector-Specific Benchmarks. (See also Part 6)

Table 8.Q-1 identifies benchmarks that apply to Sector Q. These benchmarks apply to both your primary industrial activity and any co-located industrial activities.

Table 8.Q-1.

Subsector (You may be subject to requirements for more than one sector/subsector)	Parameter	Benchmark Monitoring Concentration
Subsector Q1. Water Transportation Facilities (SIC 4412-4499)	Total Aluminum	0.75 mg/L
	Total Iron	1.0 mg/L
	Total Lead (freshwater)[2]	Hardness Dependent
	Total Lead (saltwater)[1]	0.21 mg/L
	Total Zinc (freshwater)[2]	Hardness Dependent
	Total Zinc (saltwater)[1]	0.09 mg/L

[1]Saltwater benchmark values apply to stormwater discharges into saline waters where indicated.
[2] The freshwater benchmark values of some metals are dependent on water hardness. For these parameters, permittees must determine the hardness of the receiving water (see Appendix J, "Calculating Hardness in Receiving Waters for Hardness Dependent Metals," for methodology), in accordance with Part 6.2.1.1, to identify the applicable 'hardness range' for determining their benchmark value applicable to their facility. Hardness Dependent Benchmarks follow in the table below:

Freshwater Hardness Range	**Lead** (mg/L)	**Zinc** (mg/L)
0-24.99 mg/L	0.014	0.04
25-49.99 mg/L	0.023	0.05
50-74.99 mg/L	0.045	0.08
75-99.99 mg/L	0.069	0.11
100-124.99 mg/L	0.095	0.13
125-149.99 mg/L	0.122	0.16
150-174.99 mg/L	0.151	0.18
175-199.99 mg/L	0.182	0.20
200-224.99 mg/L	0.213	0.23
225-249.99 mg/L	0.246	0.25
250+ mg/L	0.262	0.26

Part 8 – Sector-Specific Requirements for Industrial Activity

Subpart R – Sector R – Ship and Boat Building and Repair Yards.

You must comply with Part 8 sector-specific requirements associated with your primary industrial activity and any co-located industrial activities, as defined in Appendix A. The sector-specific requirements apply to those areas of your facility where those sector-specific activities occur. These sector-specific requirements are in addition to any requirements specified elsewhere in this permit.

8.R.1 Covered Stormwater Discharges.

The requirements in Subpart R apply to stormwater discharges associated with industrial activity from Ship and Boat Building and Repair Yards as identified by the SIC Codes specified under Sector R in Table D-1 of Appendix D of the permit.

8.R.2 Limitations on Coverage.

8.R.2.1 ***Prohibition of Non-Stormwater Discharges.*** (See also Part 1.1.4) Not covered by this permit: discharges from vessels including bilge and ballast water, sanitary wastes, pressure wash water, and cooling water. (EPA includes these prohibited non-stormwater discharges here solely as a helpful reminder to the operator that the only non-stormwater discharges authorized by this permit are at Part 1.1.3.)

8.R.3 Additional Technology-Based Effluent Limits.

8.R.3.1 ***Good Housekeeping Measures.*** (See also Part 2.1.2.2)

8.R.3.1.1 ***Pressure Washing Area***. If pressure washing is used to remove marine growth from vessels, the discharged water must be permitted as a process wastewater by a separate NPDES permit.

8.R.3.1.2 ***Blasting and Painting Area.*** Minimize the potential for spent abrasives, paint chips, and overspray to be discharged into receiving waters or the storm sewer system. Contain all blasting and painting activities, or use other measures, to prevent the discharge of the contaminants (e.g., hanging plastic barriers or tarpaulins during blasting or painting operations to contain debris). When necessary, regularly clean stormwater conveyances of deposits of abrasive blasting debris and paint chips.

8.R.3.1.3 ***Material Storage Areas.*** Store and plainly label all containerized materials (e.g., fuels, paints, solvents, waste oil, antifreeze, batteries) in a protected, secure location away from drains. Minimize the contamination of precipitation or surface runoff from the storage areas. If abrasive blasting is performed, discuss the storage and disposal of spent abrasive materials generated at the facility. Implement an inventory control plan to limit the presence of potentially hazardous materials onsite.

8.R.3.1.4 ***Engine Maintenance and Repair Areas.*** Minimize the contamination of precipitation or surface runoff from all areas used for engine maintenance and repair through implementation of control measures such as the following, where determined to be feasible (list not exclusive): performing all maintenance activities indoors; maintaining an organized inventory of materials used in the shop; draining all parts of fluid prior to disposal; prohibiting the practice of hosing down the shop floor; using dry cleanup methods; and treating and/or recycling stormwater runoff collected from the maintenance area.

8.R.3.1.5 ***Material Handling Area.*** Minimize the discharge of pollutants in stormwater from material handling operations and areas (e.g., fueling, paint and solvent mixing, disposal of process wastewater streams from vessels) through implementation of control measures such as the following, where determined to be feasible (list not exclusive): covering fueling areas, using spill and overflow protection, mixing paints and solvents in a designated area (preferably indoors or under a shed), and minimizing stormwater run-on to material handling areas.

8.R.3.1.6 ***Drydock Activities.*** Routinely maintain and clean the drydock to minimize pollutants in stormwater runoff. Clean accessible areas of the drydock prior to flooding and final cleanup following removal of the vessel and raising the dock. Include procedures for cleaning up oil, grease, or fuel spills occurring on the drydock. To minimize discharges of pollutants in stormwater from drydock activities, implement control measures such as the following, where determined to be feasible (list not exclusive): sweeping rather than hosing off debris and spent blasting material from accessible areas of the drydock prior to flooding; and having absorbent materials and oil containment booms readily available to clean up and contain any spills.

8.R.3.2 ***Employee Training.*** (See also Part 2.1.2.8) As part of your employee training program, address, at a minimum, the following activities (as applicable): used oil management, spent solvent management, disposal of spent abrasives, disposal of vessel wastewaters, spill prevention and control, fueling procedures, general good housekeeping practices, painting and blasting procedures, and used battery management.

8.R.3.4 ***Preventive Maintenance.*** (See also Part 2.1.2.3) As part of your preventive maintenance program, perform timely inspection and maintenance of stormwater management devices (e.g., cleaning oil and water separators and sediment traps to ensure that spent abrasives, paint chips, and solids will be intercepted and retained prior to entering the storm drainage system), as well as inspecting and testing facility equipment and systems to uncover conditions that could cause breakdowns or failures resulting in discharges of pollutants to surface waters.

8.R.4 Additional SWPPP Requirements.

8.R.4.1 ***Drainage Area Site Map.*** (See also Part 5.2.2) Document in your SWPPP where any of the following may be exposed to precipitation or surface runoff: fueling; engine maintenance or repair; vessel maintenance or repair; pressure washing; painting; sanding; blasting; welding; metal fabrication; loading and unloading areas; treatment, storage, and waste disposal areas; liquid storage tanks; liquid storage areas (e.g., paint, solvents, resins); and material storage areas (e.g., blasting media, aluminum, steel, scrap iron).

8.R.4.2 ***Potential Pollutant Sources.*** (See also Part 5.2.3) Document in your SWPPP the following additional sources and activities that have potential pollutants associated with them (if applicable): outdoor manufacturing or processing activities (e.g., welding, metal fabricating) and significant dust or particulate generating processes (e.g., abrasive blasting, sanding, and painting).

8.R.4.3 ***Documentation of Good Housekeeping Measures.*** Document in your SWPPP any good housekeeping measures implemented to meet the effluent limits in Part 8.R.3.

8.R.4.3.1 ***Blasting and Painting Areas.*** Document in the SWPPP any standard operating practices relating to blasting and painting (e.g., prohibiting uncontained blasting and painting over open water or prohibiting blasting and painting during windy conditions, which can render containment ineffective).

8.R.4.3.2 ***Storage Areas.*** Specify in your SWPPP which materials are stored indoors, and contain or enclose or use other measures for those stored outdoors.

8.R.5 Additional Inspection Requirements. (See also Part 3.1)

Include the following in all quarterly routine facility inspections: pressure washing areas; blasting, sanding, and painting areas; material storage areas; engine maintenance and repair areas; material handling areas; drydock area; and general yard area.

Part 8 – Sector-Specific Requirements for Industrial Activity

Subpart S – Sector S – Air Transportation.

You must comply with Part 8 sector-specific requirements associated with your primary industrial activity and any co-located industrial activities, as defined in Appendix A. The sector-specific requirements apply to those areas of your facility where those sector-specific activities occur. These sector-specific requirements are in addition to any requirements specified elsewhere in this permit.

8.S.1 Covered Stormwater Discharges.

The requirements in Subpart S apply to stormwater discharges associated with industrial activity from Air Transportation facilities identified by the SIC Codes specified under Sector S in Table D-1 of Appendix D of the permit.

8.S.2 Limitation on Coverage.

8.S.2.1 ***Limitations on Coverage.*** This permit authorizes stormwater discharges from only those portions of the air transportation facility that are involved in vehicle maintenance (including vehicle rehabilitation, mechanical repairs, painting, fueling and lubrication), equipment cleaning operations or deicing operations.

Note: the term "deicing" in this permit will generally be used to mean both deicing (removing frost, snow or ice) and anti-icing (preventing accumulation of frost, snow or ice) activities, unless specific mention is made otherwise.

8.S.2.2 ***Prohibition of Non-Stormwater Discharges.*** (See also Part 1.1.4 and Part 8.S.5.3) This permit does not authorize the discharge of aircraft, ground vehicle, runway and equipment wash waters; nor the dry weather discharge of deicing chemicals. Such discharges must be covered by separate NPDES permit(s). Note that a discharge resulting from snowmelt is not a dry weather discharge. (EPA includes these prohibited non-stormwater discharges here solely as a helpful reminder to the operator that the only non-stormwater discharges authorized by this permit are at Part 1.1.3.)

8.S.3 Multiple Operators at Air Transportation Facilities.

Air transportation facilities often have more than one operator who could discharge stormwater associated with industrial activity. Operators include the airport authority and airport tenants, including air passenger or cargo companies, fixed based operators, and other parties who routinely perform industrial activities on airport property.

8.S.3.1 ***Permit Coverage/Submittal of NOIs.*** Where an airport transportation facility has multiple industrial operators that discharge stormwater, each individual operator must obtain coverage under an NPDES stormwater permit. To obtain coverage under the MSGP, all such operators must meet the eligibility requirements in Part 1 and must submit an NOI, per Part 1.2.1.1 (or, if appropriate, a no exposure certification per Part 1.4).

8.S.3.2 ***MSGP Implementation Responsibilities for Airport Authority and Tenants.*** The airport authority, in collaboration with its tenants, may choose to implement certain MSGP requirements on behalf of its tenants in order to increase efficiency and eliminate redundancy or duplication of effort. Options available to the airport authority and its tenants for implementation of MSGP requirements include:

- The airport authority performs certain activities on behalf of itself and its tenants and reports on its activities;
- Tenants provide the airport authority with relevant inputs about tenants' activities, including deicing chemical usage*, and the airport authority compiles and reports on tenants' and its own activities;

- Tenants independently perform, document and submit required information on their activities.

*Tenants who report their deicing chemical usage to the airport authority and rely on the airport authority to perform monitoring should not check the glycol and urea use box on their NOI forms.

8.S.3.3 ***SWPPP Requirements.*** A single comprehensive SWPPP must be developed for all stormwater discharges associated with industrial activity at the airport before submittal of any NOIs. The comprehensive SWPPP should be developed collaboratively by the airport authority and tenants. If any operator develops a SWPPP for discharges from its own areas of the airport, that SWPPP must be coordinated and integrated with the comprehensive SWPPP. All operators and their separate SWPPP contributions and compliance responsibilities must be clearly identified in the comprehensive SWPPP, which all operators must sign and certify per Part 5.2.7. As applicable, the SWPPP must clearly specify the MSGP requirements to be complied with by:

- The airport authority for itself;
- The airport authority on behalf of its tenants;
- Tenants for themselves.

For each activity that an operator (e.g., the airport authority) conducts on behalf of another operator (e.g., a tenant), the SWPPP must describe a process for reporting results to the latter operator and for ensuring appropriate follow-up, if necessary, by all affected operators. This is to ensure all actions are taken to correct any potential deficiencies or permit violations. For example, where the airport authority is conducting monitoring for itself and its tenants, the SWPPP must identify how the airport authority will share the monitoring results with its tenants, and then follow-up with its tenants where there are any exceedances of benchmarks, effluent limits, or water quality standards. In turn, the SWPPP must describe how the tenants will also follow-up to ensure permit compliance.

8.S.3.4 ***Duty to Comply.*** All individual operators are responsible for implementing their assigned portion of the comprehensive SWPPP, and operators must ensure that their individual activities do not render another operator's stormwater controls ineffective. In addition, the standard permit conditions found in Appendix B apply to each individual operator, including B.1 Duty to Comply (which states, in part, "You [each individual operator] must comply with all conditions of this permit."). For multiple operators at an airport this means that each individual operator remains responsible for ensuring all requirements of its own MSGP coverage are met regardless of whether the comprehensive SWPPP allocates the actual implementation of any of those responsibilities to another entity. That is, the failure of the entity allocated responsibility in the SWPPP to implement an MSGP requirement on behalf of other operators does not negate the other operators' ultimate liability.

8.S.4 Additional Technology-Based Effluent Limits.

8.S.4.1 ***Good Housekeeping Measures.*** (See also Part 2.1.2.2)

8.S.4.1.1 ***Aircraft, Ground Vehicle and Equipment Maintenance Areas.*** Minimize the contamination of stormwater runoff from all areas used for aircraft, ground vehicle and equipment maintenance (including the maintenance conducted on the terminal apron and in dedicated hangers) through implementation of control measures such as the following, where determined to be feasible and that accommodate considerations of safety, space, operational constraints, and flight considerations (list not exclusive):

performing maintenance activities indoors; maintaining an organized inventory of material used in the maintenance areas; draining all parts of fluids prior to disposal; prohibiting the practice of hosing down the apron or hanger floor; using dry cleanup methods; and collecting the stormwater runoff from the maintenance area and providing treatment or recycling.

8.S.4.1.2 ***Aircraft, Ground Vehicle and Equipment Cleaning Areas.*** (See also Part 8.S.4.6) Clearly demarcate these areas on the ground using signage or other appropriate means. Minimize the contamination of stormwater runoff from cleaning areas.

8.S.4.1.3 ***Aircraft, Ground Vehicle and Equipment Storage Areas.*** Store all aircraft, ground vehicles and equipment awaiting maintenance in designated areas only and implement control measures to minimize the discharge of pollutants in stormwater from these storage areas such as the following, where determined to be feasible and that accommodate considerations of safety, space, operational constraints, and flight considerations (list not exclusive): storing aircraft and ground vehicles indoors; using drip pans for the collection of fluid leaks; and perimeter drains, dikes or berms surrounding the storage areas.

8.S.4.1.4 ***Material Storage Areas.*** Maintain the vessels of stored materials (e.g., used oils, hydraulic fluids, spent solvents, and waste aircraft fuel) in good condition to prevent or minimize contamination of stormwater. Also plainly label the vessels (e.g., "used oil," "Contaminated Jet A"). To minimize contamination of precipitation/runoff from these areas, implement control measures such as the following, where determined to be feasible and that accommodate considerations of safety, space, operational constraints, and flight considerations (list not exclusive): storing materials indoors; storing waste materials in a centralized location; and installing berms/dikes around storage areas.

8.S.4.1.5 ***Airport Fuel System and Fueling Areas.*** Minimize the discharge of pollutants in stormwater from airport fuel system and fueling areas through implementation of control measures such as the following, where determined to be feasible and that accommodate considerations of safety, space, operational constraints, and flight considerations (list not exclusive): implementing spill and overflow practices (e.g., placing absorptive materials beneath aircraft during fueling operations); using only dry cleanup methods; and collecting stormwater runoff. If you have implemented a SPCC plan developed in accordance with the 2006 amendments to the SPCC rule, you may cite the relevant aspects from your SPCC plan that comply with the requirements of this section in your SWPPP.

8.S.4.1.6 ***Source Reduction.*** Consistent with safety considerations, minimize the use of urea and glycol-based deicing chemicals to reduce the aggregate amount of deicing chemicals used that could add pollutants to stormwater discharges. Chemical options to replace pavement deicers (urea or glycol) include (list not exclusive): potassium acetate; magnesium acetate; calcium acetate; and anhydrous sodium acetate.

8.S.4.1.6.1 ***Runway Deicing Operations.*** To minimize the discharge of pollutants in stormwater from runway deicing operations, implement source reduction control measures such as the following, where determined to be feasible and that

accommodate considerations of safety, space, operational constraints, and flight considerations (list not exclusive): metered application of chemicals; pre-wetting dry chemical constituents prior to application; installing a runway ice detection system; implementing anti-icing operations as a preventive measure against ice buildup; heating sand; and product substitution.

8.S.4.1.6.2 ***Aircraft Deicing Operations.*** Minimize the discharge of pollutants in stormwater from aircraft deicing operations. Determine whether excessive application of deicing chemicals occurs and adjust as necessary, consistent with considerations of flight safety. Determine whether alternatives to glycol and whether containment measures for applied chemicals are feasible. Implement control measures for reducing deicing fluid such as the following, where determined to be feasible and that accommodate considerations of safety, space, operational constraints, and flight considerations (list not exclusive): forced-air deicing systems, computer-controlled fixed-gantry systems, infrared technology, hot water, varying glycol content to air temperature, enclosed-basket deicing trucks, mechanical methods, solar radiation, hangar storage, aircraft covers, and thermal blankets for MD-80s and DC-9s. Consider using ice-detection systems and airport traffic flow strategies and departure slot allocation systems where feasible and that accommodate considerations of safety, space, operational constraints, and flight considerations. The evaluations and determinations required by this Part should be carried out by the personnel most familiar with the particular aircraft and flight operations and related systems in question (versus an outside entity such as the airport authority).

8.S.4.1.7 ***Management of Runoff.*** (See also Part 2.1.2.6) Minimize the discharge of pollutants in stormwater from deicing chemicals in runoff. To minimize discharges of pollutants in stormwater from aircraft deicing, implement runoff management control measures such as the following, where determined to be feasible and that accommodate considerations of safety, space, operational constraints, and flight considerations (list not exclusive): installing a centralized deicing pad to recover deicing fluid following application; plug-and-pump (PnP); using vacuum/collection trucks (glycol recovery vehicles); storing contaminated stormwater/deicing fluids in tanks; recycling collected deicing fluid where feasible; releasing controlled amounts to a publicly owned treatment works; separation of contaminated snow; conveying contaminated runoff into a stormwater impoundment for biochemical decomposition (be aware of attracting wildlife that may prove hazardous to flight operations); and directing runoff into vegetative swales or other infiltration measures. To minimize discharges of pollutants in stormwater from runway deicing, implement runoff management control measures such as the following, where determined to be feasible and that accommodate considerations of safety, space, operational constraints, and flight considerations (list not exclusive): mechanical systems (snow plows, brushes); conveying contaminated runoff into swales and/or a stormwater impoundment; and pollution prevention practices such as ice detection systems, and airfield prewetting.

When applying deicing fluids during non-precipitation events (also referred to as "clear ice deicing"), implement control measures to prevent unauthorized discharge of pollutants (dry-weather discharges of pollutants would need coverage under an NPDES wastewater permit), or to minimize the discharge of pollutants from deicing fluids in later stormwater discharges, implement control measures such as the following, where determined to be feasible and that accommodate considerations safety, space, operational constraints, and flight considerations (list not exclusive): recovering deicing fluids; preventing the fluids from entering storm sewers or other stormwater discharge conveyances (e.g., covering storm sewer inlets, using booms, installing absorptive interceptors in the drains); releasing controlled amounts to a publicly owned treatment works Used deicing fluid should be recycled whenever practicable.

8.S.4.2 ***Deicing Season.*** You must determine the seasonal timeframe (e.g., December-February, October - March) during which deicing activities typically occur at the facility. Implementation of control measures, including any BMPs, facility inspections and monitoring must be conducted with particular emphasis throughout the defined deicing season. If you meet the deicing chemical usage thresholds of 100,000 gallons glycol and/or 100 tons of urea, the deicing season you identified is the timeframe during which you must obtain the four required benchmark monitoring event results for deicing-related parameters, i.e., BOD, COD, ammonia and pH. See also Part 8.S.7.

8.S.5 Additional SWPPP Requirements.

8.S.5.1 ***Drainage Area Site Map***. (See also Part 5.2.2) Document in the SWPPP the following areas of the facility and indicate whether activities occurring there may be exposed to precipitation/surface runoff: aircraft and runway deicing operations; fueling stations; aircraft, ground vehicle and equipment maintenance/cleaning areas; and storage areas for aircraft, ground vehicles and equipment awaiting maintenance.

8.S.5.2 ***Potential Pollutant Sources.*** (See also Part 5.2.3) In the inventory of exposed materials, describe in the SWPPP the potential for the following activities and facility areas to contribute pollutants to stormwater discharges: aircraft, runway, ground vehicle and equipment maintenance and cleaning; and aircraft and runway deicing operations (including apron and centralized aircraft deicing stations, runways, taxiways and ramps). If deicing chemicals are used, a record of the types (including the Safety Data Sheets [SDS]) used and the monthly quantities, either as measured or, in the absence of metering, using best estimates, must be maintained. This includes all deicing chemicals, not just glycols and urea (e.g., potassium acetate), because large quantities of these other chemicals can still have an adverse impact on receiving waters. Deicing operators must provide the above information to the airport authority for inclusion with any comprehensive airport SWPPPs.

8.S.5.3 ***Vehicle and Equipment Wash Water Requirements.*** If wash water is handled in a manner that does not involve separate NPDES permitting or local pretreatment requirements (e.g., hauled offsite, retained onsite), describe the disposal method and include all pertinent information (e.g., frequency, volume, destination) in your SWPPP. Discharges of vehicle and equipment wash water are not authorized by this permit for this sector.

8.S.5.4 ***Documentation of Control Measures Used for Management of Runoff***. Document in your SWPPP the control measures used for collecting or containing contaminated melt water from collection areas used for disposal of contaminated snow.

8.S.6 Additional Inspection Requirements.

At a minimum conduct facility inspections at least monthly during the deicing season (e.g., October through April for most mid-latitude airports). If your facility needs to deice before or after this period, expand the monthly inspections to include all months during which deicing chemicals may be used. The Director may specifically require you to increase inspection frequencies.

8.S.7 Sector-Specific Benchmarks. (See also Part 6)

Table 8.S-1 identifies benchmarks that apply to Sector S. These benchmarks apply to both your primary industrial activity and any co-located industrial activities.

Table 8.S-1.

Subsector (You may be subject to requirements for more than one sector/subsector)	Parameter	Benchmark Monitoring Concentration
For airports where a single permittee, or a combination of permitted facilities use more than 100,000 gallons of pure glycol in glycol-based deicing fluids and/or 100 tons or more of urea on an average annual basis, monitor the first four parameters in ONLY those outfalls that collect runoff from areas where deicing activities occur (SIC 4512-4581).	Biochemical Oxygen Demand (BOD_5)[1]	30 mg/L
	Chemical Oxygen Demand (COD)[1]	120 mg/L
	Ammonia[1]	2.14 mg/L
	pH[1]	6.0 - 9.0 s.u.

[1] These are deicing-related parameters. Collect the four benchmark samples, and any required follow-up benchmark samples, during the timeframe defined in Part 8.S.4.2 when deicing activities are occurring.

8.S.8 Effluent Limitations Based on Effluent Limitations Guidelines and New Source Performance Standards. (See also Part 6.2.2.1)

8.S.8.1 ***Airfield Pavement Deicing.*** For both existing and new "primary airports" (as defined at 40 CFR 449.2) with 1,000 or more annual non-propeller aircraft departures that discharge stormwater from airfield pavement deicing activities, there shall be no discharge of airfield pavement deicers containing urea. To comply with this limitation, such airports must do one of the following: (1) certify annually on the annual report that you do not use pavement deicers containing urea, or (2) meet the effluent limitation in Table 8.S-2.

8.S.8.2 ***Aircraft Deicing.*** Airports that are both "primary airports" (as defined at 40 CFR 449.2) and new sources ("new airports") with 1,000 or more annual non-propeller aircraft departures must meet the applicable requirements for aircraft deicing at 40 CFR 449.11(a). Discharges of the collected aircraft deicing fluid directly to waters of the U.S. are not eligible for coverage under this permit.

8.S.8.3 ***Monitoring, Reporting and Recordkeeping.*** For new and existing airports subject to the effluent limitations in Part 8.S.8.1 or 8.S.8.2 of this permit, you must comply with the applicable monitoring, reporting and recordkeeping requirements outlined in 40 CFR 449.20.

Table 8.S-2		
Industrial Activity	**Parameter**	**Effluent Limitation**
Runoff containing urea from airfield pavement deicing at existing and new primary airports with 1,000 or more annual non-propeller aircraft departures	Ammonia as Nitrogen	14.7 mg/L, daily maximum

Part 8 – Sector-Specific Requirements for Industrial Activity

Subpart T – Sector T – Treatment Works.

You must comply with Part 8 sector-specific requirements associated with your primary industrial activity and any co-located industrial activities, as defined in Appendix A. The sector-specific requirements apply to those areas of your facility where those sector-specific activities occur. These sector-specific requirements are in addition to any requirements specified elsewhere in this permit.

8.T.1 Covered Stormwater Discharges.

The requirements in Subpart T apply to stormwater discharges associated with industrial activity from Treatment Works as identified by the Activity Code specified under Sector T in Table D-1 of Appendix D of the permit.

8.T.2 Industrial Activities Covered by Sector T.

The requirements listed under this part apply to all existing point source stormwater discharges associated with the following activities:

8.T.2.1 ***Treatment works treating domestic sewage, or any other sewage sludge or wastewater treatment device or system used in the storage, treatment, recycling, and reclamation of municipal or domestic sewage, including land dedicated to the disposal of sewage sludge; that are located within the confines of a facility with a design flow of 1.0 million gallons per day (MGD) or more; or are required to have an approved pretreatment program under 40 CFR Part 403.***

8.T.2.2 ***The following are not required to have permit coverage: farm lands, domestic gardens or lands used for sludge management where sludge is beneficially reused and which are not physically located within the facility, or areas that are in compliance with Section 405 of the CWA.***

8.T.3 Limitations on Coverage.

8.T.3.1 ***Prohibition of Non-Stormwater Discharges.*** (See also Part 1.1.4) Sanitary and industrial wastewater and equipment and vehicle wash water are not authorized by this permit. (EPA includes these prohibited non-stormwater discharges here solely as a helpful reminder to the operator that the only non-stormwater discharges authorized by this permit are at Part 1.1.3.)

8.T.4 Additional Technology-Based Effluent Limits.

8.T.4.1 ***Control Measures.*** (See also Part 2.1.2) To minimize the discharge of pollutants in stormwater, implement control measures such as the following, where determined to be feasible (list not exclusive): routing stormwater to the treatment works; or covering exposed materials (i.e., from the following areas: grit, screenings and other solids handling, storage or disposal areas; sludge drying beds; dried sludge piles; compost piles; and septage or hauled waste receiving station).

8.T.4.2 ***Employee Training.*** (See also Part 2.1.2.8) At a minimum, training must address the following areas when applicable to a facility: petroleum product management; process chemical management; spill prevention and controls; fueling procedures; general good housekeeping practices; and proper procedures for using fertilizer, herbicides, and pesticides.

8.T.5 Additional SWPPP Requirements.

8.T.5.1 ***Site Map.*** (See also Part 5.2.2) Document in your SWPPP where any of the following may be exposed to precipitation or surface runoff: grit, screenings, and other solids handling, storage, or disposal areas; sludge drying beds; dried sludge piles; compost piles; septage or hauled waste receiving station; and storage areas for process chemicals, petroleum products, solvents, fertilizers, herbicides, and pesticides.

8.T.5.2 ***Potential Pollutant Sources***. (See also Part 5.2.3) Document in your SWPPP the following additional sources and activities that have potential pollutants associated with them, as applicable: grit, screenings, and other solids handling, storage, or disposal areas; sludge drying beds; dried sludge piles; compost piles; septage or hauled waste receiving station; and access roads and rail lines.

8.T.5.3 ***Wastewater and Wash Water Requirements.*** If wastewater and/or vehicle and equipment wash water is not covered by another NPDES permit but is handled in another manner (e.g., hauled offsite, retained onsite), the disposal method must be described and all pertinent information (e.g., frequency, volume, destination) must be included in your SWPPP. Discharges of vehicle and equipment wash water, including tank cleaning operations, are not authorized by this permit for this sector.

8.T.6 Additional Inspection Requirements. (See also Part 3.1)

Include the following areas in all inspections: access roads and rail lines; grit, screenings, and other solids handling, storage, or disposal areas; sludge drying beds; dried sludge piles; compost piles; and septage or hauled waste receiving station.

Part 8 – Sector-Specific Requirements for Industrial Activity

Subpart U – Sector U – Food and Kindred Products.

You must comply with Part 8 sector-specific requirements associated with your primary industrial activity and any co-located industrial activities, as defined in Appendix A. The sector-specific requirements apply to those areas of your facility where those sector-specific activities occur. These sector-specific requirements are in addition to any requirements specified elsewhere in this permit.

8.U.1 Covered Stormwater Discharges.

The requirements in Subpart U apply to stormwater discharges associated with industrial activity from Food and Kindred Products facilities as identified by the SIC Codes specified in Table D-1 of Appendix D of the permit.

8.U.2 Limitations on Coverage.

8.U.2.1 ***Prohibition of Non-Stormwater Discharges.*** (See also Part 1.1.4) The following discharges are not authorized by this permit: discharges containing boiler blowdown, cooling tower overflow and blowdown, ammonia refrigeration purging, and vehicle washing and clean-out operations. (EPA includes these prohibited non-stormwater discharges here solely as a helpful reminder to the operator that the only non-stormwater discharges authorized by this permit are at Part 1.1.3.)

8.U.3 Additional Technology-Based Limitations.

8.U.3.1 ***Employee Training.*** (See also Part 2.1.2.8) Address pest control in your employee training program.

8.U.4 Additional SWPPP Requirements.

8.U.4.1 ***Drainage Area Site Map.*** (See also Part 5.2.2) Document in your SWPPP the locations of the following activities if they are exposed to precipitation or runoff: vents and stacks from cooking, drying, and similar operations; dry product vacuum transfer lines; animal holding pens; spoiled product; and broken product container storage areas.

8.U.4.2 ***Potential Pollutant Sources.*** (See also Part 5.2.3) Document in your SWPPP, in addition to food and kindred products processing-related industrial activities, application and storage of pest control chemicals (e.g., rodenticides, insecticides, fungicides) used on plant grounds.

8.U.5 Additional Inspection Requirements. (See also Part 3.1)

Inspect on a quarterly basis, at a minimum, the following areas where the potential for exposure to stormwater exists: loading and unloading areas for all significant materials; storage areas, including associated containment areas; waste management units; vents and stacks emanating from industrial activities; spoiled product and broken product container holding areas; animal holding pens; staging areas; and air pollution control equipment.

8.U.6 Sector-Specific Benchmarks. (See also Part 6)

Table 8.U-1 identifies benchmarks that apply to the specific subsectors of Sector U. These benchmarks apply to both your primary industrial activity and any co-located industrial activities.

Table 8.U-1.		
Subsector (You may be subject to requirements for more than one Sector / Subsector)	**Parameter**	**Benchmark Monitoring Concentration**
Subsector U1. Grain Mill Products (SIC 2041-2048)	Total Suspended Solids (TSS)	100 mg/L
Subsector U2. Fats and Oils Products (SIC 2074-2079)	Biochemical Oxygen Demand (BOD_5)	30 mg/L
	Chemical Oxygen Demand (COD)	120 mg/L
	Nitrate plus Nitrite Nitrogen	0.68 mg/L
	Total Suspended Solids (TSS)	100 mg/L

Part 8 – Sector-Specific Requirements for Industrial Activity

Subpart V – Sector V – Textile Mills, Apparel, and Other Fabric Products.

You must comply with Part 8 sector-specific requirements associated with your primary industrial activity and any co-located industrial activities, as defined in Appendix A. The sector-specific requirements apply to those areas of your facility where those sector-specific activities occur. These sector-specific requirements are in addition to any requirements specified elsewhere in this permit.

8.V.1 Covered Stormwater Discharges.

The requirements in Subpart V apply to stormwater discharges associated with industrial activity from Textile Mills, Apparel, and Other Fabric Product manufacturing as identified by the SIC Codes specified under Sector V in Table D-1 of Appendix D of the permit.

8.V.2 Limitations on Coverage.

8.V.2.1 ***Prohibition of Non-Stormwater Discharges.*** (See also Part 1.1.4) The following are not authorized by this permit: discharges of wastewater (e.g., wastewater resulting from wet processing or from any processes relating to the production process), reused or recycled water, and waters used in cooling towers. If you have these types of discharges from your facility, you must cover them under a separate NPDES permit. (EPA includes these prohibited non-stormwater discharges here solely as a helpful reminder to the operator that the only non-stormwater discharges authorized by this permit are at Part 1.1.3.)

8.V.3 Additional Technology-Based Limitations.

8.V.3.1 ***Good Housekeeping Measures.*** (See also Part 2.1.2.2)

8.V.3.1.1 ***Material Storage Areas.*** Plainly label and store all containerized materials (e.g., fuels, petroleum products, solvents, and dyes) in a protected area, away from drains. Minimize contamination of the stormwater runoff from such storage areas. Also consider an inventory control plan to prevent excessive purchasing of potentially hazardous substances. For storing empty chemical drums or containers, ensure that the drums and containers are clean (consider triple-rinsing) and that there is no contact of residuals with precipitation or runoff. Collect and dispose of wash water from these cleanings properly.

8.V.3.1.2 ***Material Handling Areas.*** Minimize contamination of stormwater runoff from material handling operations and areas through implementation of control measures such as the following, where determined to be feasible: using spill and overflow protection; covering fueling areas; and covering or enclosing areas where the transfer of material may occur. When applicable, address the replacement or repair of leaking connections, valves, transfer lines and pipes that may carry chemicals, dyes or wastewater.

8.V.3.1.3 ***Fueling Areas.*** Minimize contamination of stormwater runoff from fueling areas through implementation of control measures such as the following, where determined to be feasible: covering the fueling area; using spill and overflow protection; minimizing run-on of stormwater to the fueling areas; using dry cleanup methods; and treating and/or recycling stormwater runoff collected from the fueling area.

8.V.3.1.4 ***Above-Ground Storage Tank Area.*** Minimize contamination of stormwater runoff from above-ground storage tank areas, including the associated piping and valves, through implementation of control measures such as the following, where determined to be feasible (list not exclusive): regular cleanup of these areas; including measures for tanks, piping and valves explicitly in your SPCC program; minimizing runoff of stormwater from adjacent areas; restricting access to the area; inserting filters in adjacent catch basins; providing absorbent booms in unbermed fueling areas; using dry cleanup methods; and permanently sealing drains within critical areas that may discharge to a storm drain.

8.V.3.2 ***Employee Training.*** (See also Part 2.1.2.8) As part of your employee training program, address, at a minimum, the following activities (as applicable): use of reused and recycled waters, solvents management, proper disposal of dyes, proper disposal of petroleum products and spent lubricants, spill prevention and control, fueling procedures, and general good housekeeping practices.

8.V.4 Additional SWPPP Requirements.

8.V.4.1 ***Potential Pollutant Sources.*** (See also Part 5.2.3) Document in your SWPPP the following additional sources and activities that have potential pollutants associated with them: industry-specific significant materials and industrial activities (e.g., backwinding, beaming, bleaching, backing bonding, carbonizing, carding, cut and sew operations, desizing, drawing, dyeing locking, fulling, knitting, mercerizing, opening, packing, plying, scouring, slashing, spinning, synthetic-felt processing, textile waste processing, tufting, turning, weaving, web forming, winging, yarn spinning, and yarn texturing).

8.V.4.2 ***Description of Good Housekeeping Measures for Material Storage Areas.*** Document in the SWPPP your containment area or enclosure for materials stored outdoors in connection with Part 8.V.3.1.1 above.

8.V.5 Additional Inspection Requirements.

Inspect, at least monthly, the following activities and areas (at a minimum): transfer and transmission lines, spill prevention, good housekeeping practices, management of process waste products, and all structural and nonstructural management practices.

Part 8 – Sector-Specific Requirements for Industrial Activity

Subpart W – Sector W – Furniture and Fixtures.

You must comply with Part 8 sector-specific requirements associated with your primary industrial activity and any co-located industrial activities, as defined in Appendix A. The sector-specific requirements apply to those areas of your facility where those sector-specific activities occur. These sector-specific requirements are in addition to any requirements specified elsewhere in this permit.

8.W.1 Covered Stormwater Discharges.

The requirements in Subpart W apply to stormwater discharges associated with industrial activity from Furniture and Fixtures facilities as identified by the SIC Codes specified under Sector W in Table D-1 of Appendix D of the permit.

8.W.2 Additional SWPPP Requirements.

8.W.2.1 ***Drainage Area Site Map.*** (See also Part 5.2.2) Document in your SWPPP where any of the following may be exposed to precipitation or surface runoff: material storage (including tanks or other vessels used for liquid or waste storage) areas; outdoor material processing areas; areas where wastes are treated, stored, or disposed of; access roads; and rail spurs.

Part 8 – Sector-Specific Requirements for Industrial Activity

Subpart X – Sector X – Printing and Publishing.

You must comply with Part 8 sector-specific requirements associated with your primary industrial activity and any co-located industrial activities, as defined in Appendix A. The sector-specific requirements apply to those areas of your facility where those sector-specific activities occur. These sector-specific requirements are in addition to any requirements specified elsewhere in this permit.

8.X.1 Covered Stormwater Discharges.

The requirements in Subpart X apply to stormwater discharges associated with industrial activity from Printing and Publishing facilities as identified by the SIC Codes specified under Sector X in Table D-1 of Appendix D of the permit.

8.X.2 Additional Technology-Based Effluent Limits.

8.X.2.1 ***Good Housekeeping Measures.*** (See also Part 2.1.2.2)

8.X.2.1.1 ***Material Storage Areas.*** Plainly label and store all containerized materials (e.g., skids, pallets, solvents, bulk inks, hazardous waste, empty drums, portable and mobile containers of plant debris, wood crates, steel racks, and fuel oil) in a protected area, away from drains. Minimize contamination of the stormwater runoff from such storage areas. Also consider an inventory control plan to prevent excessive purchasing of potentially hazardous substances.

8.X.2.1.2 ***Material Handling Area.*** Minimize contamination of stormwater runoff from material handling operations and areas (e.g., blanket wash, mixing solvents, loading and unloading materials) through implementation of control measures such as the following, where determined to be feasible (list not exclusive): using spill and overflow protection; covering fueling areas; and covering or enclosing areas where the transfer of materials may occur. When applicable, address the replacement or repair of leaking connections, valves, transfer lines, and pipes that may carry chemicals or wastewater.

8.X.2.1.3 ***Fueling Areas.*** Minimize contamination of stormwater runoff from fueling areas through implementation of control measures such as the following, where determined to be feasible (list not exclusive): covering the fueling area; using spill and overflow protection; minimizing runoff of stormwater to the fueling areas; using dry cleanup methods; and treating and/or recycling stormwater runoff collected from the fueling area.

8.X.2.1.4 ***Above Ground Storage Tank Area.*** Minimize contamination of the stormwater runoff from above-ground storage tank areas, including the associated piping and valves, through implementation of control measures such as the following, where determined to be feasible (list not exclusive): regularly cleaning these areas; explicitly addressing tanks; piping and valves in the SPCC program; minimizing stormwater runoff from adjacent areas; restricting access to the area; inserting filters in adjacent catch basins; providing absorbent booms in unbermed fueling areas; using dry cleanup methods; and permanently sealing drains within critical areas that may discharge to a storm drain.

8.X.2.2 ***Employee Training.*** (See also Part 2.1.2.8) As part of your employee training program, address, at a minimum, the following activities (as applicable): spent solvent management, spill prevention and control, used oil management, fueling procedures, and general good housekeeping practices.

8.X.3 Additional SWPPP Requirements.

8.X.3.1 ***Description of Good Housekeeping Measures for Material Storage Areas.*** In connection with Part 8.X.2.1.1, describe in the SWPPP the containment area or enclosure for materials stored outdoors.

Part 8 – Sector-Specific Requirements for Industrial Activity

Subpart Y – Sector Y – Rubber, Miscellaneous Plastic Products, and Miscellaneous Manufacturing Industries.

You must comply with Part 8 sector-specific requirements associated with your primary industrial activity and any co-located industrial activities, as defined in Appendix A. The sector-specific requirements apply to those areas of your facility where those sector-specific activities occur. These sector-specific requirements are in addition to any requirements specified elsewhere in this permit.

8.Y.1 Covered Stormwater Discharges.

The requirements in Subpart Y apply to stormwater discharges associated with industrial activity from Rubber, Miscellaneous Plastic Products, and Miscellaneous Manufacturing Industries facilities as identified by the SIC Codes specified under Sector Y in Table D-1 of Appendix D of the permit.

8.Y.2 Additional Technology-Based Effluent Limits.

8.Y.2.1 ***Controls for Rubber Manufacturers***. (See also Part 2.1.2) Minimize the discharge of zinc in your stormwater discharges. Parts 8.Y.2.1.1 to 8.Y.2.1.5 give possible sources of zinc to be reviewed and list control measures to be implemented where determined to be feasible. Implement additional control measures such as the following, where determined to be feasible (list not exclusive): using chemicals purchased in pre-weighed, sealed polyethylene bags; storing in-use materials in sealable containers, ensuring an airspace between the container and the cover to minimize "puffing" losses when the container is opened; and using automatic dispensing and weighing equipment.

8.Y.2.1.1 ***Zinc Bags.*** Ensure proper handling and storage of zinc bags at your facility through implementation of control measures such as the following, where determined to be feasible (list not exclusive): employee training on the handling and storage of zinc bags; indoor storage of zinc bags; cleanup of zinc spills without washing the zinc into the storm drain; and the use of 2,500-pound sacks of zinc rather than 50- to 100-pound sacks.

8.Y.2.1.2 ***Dumpsters.*** Minimize discharges of zinc from dumpsters through implementation of control measures such as the following, where determined to be feasible (list not exclusive): covering the dumpster; moving the dumpster indoors; and providing a lining for the dumpster.

8.Y.2.1.3 ***Dust Collectors and Baghouses***. Minimize contributions of zinc to stormwater from dust collectors and baghouses. Replace or repair, as appropriate, improperly operating dust collectors and baghouses.

8.Y.2.1.4 ***Grinding Operations.*** Minimize contamination of stormwater as a result of dust generation from rubber grinding operations. Where determined to be feasible, install a dust collection system.

8.Y.2.1.5 ***Zinc Stearate Coating Operations.*** Minimize the potential for stormwater contamination from drips and spills of zinc stearate slurry that may be released to the storm drain. Where determined to be feasible, use alternative compounds to zinc stearate.

8.Y.2.2 ***Controls for Plastic Products Manufacturers.*** Minimize the discharge of plastic resin pellets in your stormwater discharges through implementation of control measures such as the following, where determined to be feasible (list not exclusive): minimizing spills; cleaning up of spills promptly and thoroughly; sweeping thoroughly; pellet capturing; employee education; and disposal precautions.

8.Y.3 Additional SWPPP Requirements.

8.Y.3.1 ***Potential Pollutant Sources for Rubber Manufacturers.*** (See also Part 5.2.3) Document in your SWPPP the use of zinc at your facility and the possible pathways through which zinc may be discharged in stormwater runoff.

8.Y.4 Sector-Specific Benchmarks. (See also Part 6)

Table 8.Y-1 identifies benchmarks that apply to Sector Y. These benchmarks apply to both your primary industrial activity and any co-located industrial activities.

Table 8.Y-1.

Subsector (You may be subject to requirements for more than one sector/subsector)	Parameter	Benchmark Monitoring Concentration
Subsector Y1. Rubber Products Manufacturing (SIC 3011, 3021, 3052, 3053, 3061, 3069)	Total Zinc (freshwater)[2] Total Zinc (saltwater)[1]	Hardness Dependent 0.09 mg/L

[1]Saltwater benchmark values apply to stormwater discharges into saline waters where indicated.
[2] The freshwater benchmark values of some metals are dependent on water hardness. For these parameters, permittees must determine the hardness of the receiving water (see Appendix J, "Calculating Hardness in Receiving Waters for Hardness Dependent Metals," for methodology), in accordance with Part 6.2.1.1, to identify the applicable 'hardness range' for determining their benchmark value applicable to their facility. Hardness Dependent Benchmarks follow in the table below:

Freshwater Hardness Range	**Zinc** (mg/L)
0-24.99 mg/L	0.04
25-49.99 mg/L	0.05
50-74.99 mg/L	0.08
75-99.99 mg/L	0.11
100-124.99 mg/L	0.13
125-149.99 mg/L	0.16
150-174.99 mg/L	0.18
175-199.99 mg/L	0.20
200-224.99 mg/L	0.23
225-249.99 mg/L	0.25
250+ mg/L	0.26

Part 8 – Sector-Specific Requirements for Industrial Activity

Subpart Z – Sector Z – Leather Tanning and Finishing.

You must comply with Part 8 sector-specific requirements associated with your primary industrial activity and any co-located industrial activities, as defined in Appendix A. The sector-specific requirements apply to those areas of your facility where those sector-specific activities occur. These sector-specific requirements are in addition to any requirements specified elsewhere in this permit.

8.Z.1 Covered Stormwater Discharges.

The requirements in Subpart Z apply to stormwater discharges associated with industrial activity from Leather Tanning and Finishing facilities as identified by the SIC Code specified under Sector Z in Table D-1 of Appendix D of the permit.

8.Z.2 Additional Technology-Based Effluent Limits.

8.Z.2.3 ***Good Housekeeping Measures.*** (See also Part 2.1.2.2)

8.Z.2.3.1 ***Storage Areas for Raw, Semiprocessed, or Finished Tannery By-products.*** Minimize contamination of stormwater runoff from pallets and bales of raw, semiprocessed, or finished tannery by-products (e.g., splits, trimmings, shavings). Store or protect indoors with polyethylene wrapping, tarpaulins, roofed storage, etc. where practicable. Place materials on an impermeable surface and enclose or put berms (or equivalent measures) around the area to prevent stormwater run-on and runoff where practicable.

8.Z.2.3.2 ***Material Storage Areas.*** Label storage containers of all materials (e.g., specific chemicals, hazardous materials, spent solvents, waste materials) and minimize contact of such materials with stormwater.

8.Z.2.3.3 ***Buffing and Shaving Areas.*** Minimize contamination of stormwater runoff with leather dust from buffing and shaving areas through implementation of control measures such as the following, where determined to be feasible (list not exclusive): implementing dust collection enclosures; implementing preventive inspection and maintenance programs; or other appropriate preventive measures.

8.Z.2.3.4 ***Receiving, Unloading, and Storage Areas.*** Minimize contamination of stormwater runoff from receiving, unloading, and storage areas. If these areas are exposed, implement control measures such as the following, where determined to be feasible (list not exclusive): covering all hides and chemical supplies; diverting drainage to the process sewer; or grade berming or curbing the area to prevent stormwater runoff.

8.Z.2.3.5 ***Outdoor Storage of Contaminated Equipment.*** Minimize contact of stormwater with contaminated equipment through implementation of control measures such as the following, where determined to be feasible (list not exclusive): covering equipment, diverting drainage to the process sewer, and cleaning thoroughly prior to storage.

8.Z.2.3.6 ***Waste Management.*** Minimize contamination of stormwater runoff from waste storage areas through implementation of control measures such as the following, where determined to be feasible (list not exclusive): covering dumpsters; moving waste management activities indoors; covering waste piles with temporary covering material such as tarpaulins or polyethylene; and

minimizing stormwater runoff by enclosing the area or building berms around the area.

8.Z.3 Additional SWPPP Requirements.

8.Z.3.1 ***Drainage Area Site Map.*** (See also Part 5.2.2) Identify in your SWPPP where any of the following may be exposed to precipitation or surface runoff: processing and storage areas of the beamhouse, tanyard, and re-tan wet finishing and dry finishing operations.

8.Z.3.2 ***Potential Pollutant Sources.*** (See also Part 5.2.3) Document in your SWPPP the following sources and activities that have potential pollutants associated with them (as appropriate): temporary or permanent storage of fresh and brine-cured hides; extraneous hide substances and hair; leather dust, scraps, trimmings, and shavings.

Part 8 – Sector-Specific Requirements for Industrial Activity

Subpart AA – Sector AA – Fabricated Metal Products

You must comply with Part 8 sector-specific requirements associated with your primary industrial activity and any co-located industrial activities, as defined in Appendix A. The sector-specific requirements apply to those areas of your facility where those sector-specific activities occur. These sector-specific requirements are in addition to any requirements specified elsewhere in this permit.

8.AA.1 Covered Stormwater Discharges.

The requirements in Subpart AA apply to stormwater discharges associated with industrial activity from Fabricated Metal Products facilities as identified by the SIC Codes specified under Sector AA in Table D-1 of Appendix D of the permit.

8.AA.2 Additional Technology-Based Effluent Limits.

8.AA.2.1 ***Good Housekeeping Measures.*** (See also Part 2.1.2.2)

8.AA.2.1.1 ***Raw Steel Handling Storage.*** Minimize the generation of and/or recover and properly manage scrap metals, fines, and iron dust. Include measures for containing materials within storage handling areas.

8.AA.2.1.2 ***Paints and Painting Equipment.*** Minimize exposure of paint and painting equipment to stormwater.

8.AA.2.2 ***Spill Prevention and Response Procedures.*** (See also Part 2.1.2.4) Ensure that the necessary equipment to implement a cleanup is available to personnel. The following areas should be addressed:

8.AA.2.2.1 ***Metal Fabricating Areas.*** Maintain clean, dry, orderly conditions in these areas. Use dry clean-up techniques where practicable.

8.AA.2.2.2 ***Storage Areas for Raw Metal.*** Keep these areas free of conditions that could cause, or impede appropriate and timely response to, spills or leakage of materials through implementation of control measures such as the following, where determined to be feasible (list not exclusive): maintaining storage areas so that there is easy access in the event of a spill, and labeling stored materials to aid in identifying spill contents.

8.AA.2.2.3 ***Metal Working Fluid Storage Areas.*** Minimize the potential for stormwater contamination from storage areas for metal working fluids.

8.AA.2.2.4 ***Cleaners and Rinse Water***. Control and clean up spills of solvents and other liquid cleaners, control sand buildup and disbursement from sand-blasting operations, and prevent exposure of recyclable wastes. Substitute environmentally benign cleaners when possible.

8.AA.2.2.5 ***Lubricating Oil and Hydraulic Fluid Operations.*** Minimize the potential for stormwater contamination from lubricating oil and hydraulic fluid operations. Use monitoring equipment or other devices to detect and control leaks and overflows where feasible. Install perimeter controls such as dikes, curbs, grass filter strips, or equivalent measures where feasible.

8.AA.2.2.6 ***Chemical Storage Areas.*** Minimize stormwater contamination and accidental spillage in chemical storage areas. Include a program to inspect containers and identify proper disposal methods.

8.AA.2.3 ***Spills and Leaks.*** (See also Part 5.2.3.3) In your spill prevention and response procedures, required by Part 2.1.2.4, pay attention to the following materials (at a minimum): chromium, toluene, pickle liquor, sulfuric acid, zinc and other water priority chemicals, and hazardous chemicals and wastes.

8.AA.3 Additional SWPPP Requirements.

8.AA.3.1 ***Drainage Area Site Map.*** (See also Part 5.2.2) Document in your SWPPP where any of the following may be exposed to precipitation or surface runoff: raw metal storage areas; finished metal storage areas; scrap disposal collection sites; equipment storage areas; retention and detention basins; temporary and permanent diversion dikes or berms; right-of-way or perimeter diversion devices; sediment traps and barriers; processing areas, including outside painting areas; wood preparation; recycling; and raw material storage.

8.AA.3.2 ***Potential Pollutant Sources.*** (See also Part 5.2.3) Document in your SWPPP the following additional sources and activities that have potential pollutants associated with them: loading and unloading operations for paints, chemicals, and raw materials; outdoor storage activities for raw materials, paints, empty containers, corn cobs, chemicals, and scrap metals; outdoor manufacturing or processing activities such as grinding, cutting, degreasing, buffing, and brazing; onsite waste disposal practices for spent solvents, sludge, pickling baths, shavings, ingot pieces, and refuse and waste piles.

8.AA.4 Additional Inspection Requirements.

8.AA.4.1 ***Inspections.*** (See also Part 3.1) At a minimum, include the following areas in all inspections: raw metal storage areas, finished product storage areas, material and chemical storage areas, spent solvents and chemical storage areas, recycling areas, loading and unloading areas, equipment storage areas, paint areas, drainage from roof and vehicle fueling and maintenance areas. Potential pollutants include chromium, zinc, lubricating oil, solvents, aluminum, oil and grease, methyl ethyl ketone, steel, and related materials.

8.AA.5 Sector-Specific Benchmarks. (See also Part 6)

Table 8.AA-1 identifies benchmarks that apply to the specific subsectors of Sector AA. These benchmarks apply to both your primary industrial activity and any co-located industrial activities.

Table 8.AA-1

Subsector (You may be subject to requirements for more than one sector/subsector)	Parameter	Benchmark Monitoring Concentration
Subsector AA1. Fabricated Metal Products, except Coating (SIC 3411-3499; 3911-3915)	Total Aluminum	0.75 mg/L
	Total Iron	1.0 mg/L
	Total Zinc (freshwater)[2] Total Zinc (saltwater)[1]	Hardness Dependent 0.09 mg/L
	Nitrate plus Nitrite Nitrogen	0.68 mg/L
Subsector AA2. Fabricated Metal Coating and Engraving (SIC 3479)	Total Zinc (freshwater)[2] Total Zinc (saltwater)[1]	Hardness Dependent 0.09 mg/L
	Nitrate plus Nitrite Nitrogen	0.68 mg/L

[1]Saltwater benchmark values apply to stormwater discharges into saline waters where indicated.
[2] The freshwater benchmark values of some metals are dependent on water hardness. For these parameters, permittees must determine the hardness of the receiving water (see Appendix J, "Calculating Hardness in Receiving Waters for Hardness Dependent Metals," for methodology), in accordance with Part 6.2.1.1, to identify the applicable 'hardness range' for determining their benchmark value applicable to their facility. Hardness Dependent Benchmarks follow in the table below:

Freshwater Hardness Range	**Zinc** (mg/L)
0-24.99 mg/L	0.04
25-49.99 mg/L	0.05
50-74.99 mg/L	0.08
75-99.99 mg/L	0.11
100-124.99 mg/L	0.13
125-149.99 mg/L	0.16
150-174.99 mg/L	0.18
175-199.99 mg/L	0.20
200-224.99 mg/L	0.23
225-249.99 mg/L	0.25
250+ mg/L	0.26

Part 8 – Sector-Specific Requirements for Industrial Activity

Subpart AB – Sector AB – Transportation Equipment, Industrial or Commercial Machinery Facilities.

You must comply with Part 8 sector-specific requirements associated with your primary industrial activity and any co-located industrial activities, as defined in Appendix A. The sector-specific requirements apply to those areas of your facility where those sector-specific activities occur. These sector-specific requirements are in addition to any requirements specified elsewhere in this permit.

8.AB.1 Covered Stormwater Discharges.

The requirements in Subpart AB apply to stormwater discharges associated with industrial activity from Transportation Equipment, Industrial or Commercial Machinery facilities as identified by the SIC Codes specified under Sector AB in Table D-1 of Appendix D of the permit.

8.AB.2 Additional SWPPP Requirements.

8.AB.2.1 ***Drainage Area Site Map.*** (See also Part 5.2.2) Identify in your SWPPP where any of the following may be exposed to precipitation or surface runoff: vents and stacks from metal processing and similar operations.

Part 8 – Sector-Specific Requirements for Industrial Activity

Subpart AC– Sector AC – Electronic and Electrical Equipment and Components, Photographic and Optical Goods.

You must comply with Part 8 sector-specific requirements associated with your primary industrial activity and any co-located industrial activities, as defined in Appendix A. The sector-specific requirements apply to those areas of your facility where those sector-specific activities occur. These sector-specific requirements are in addition to any requirements specified elsewhere in this permit.

8.AC.1 Covered Stormwater Discharges.

The requirements in Subpart AC apply to stormwater discharges associated with industrial activity from facilities that manufacture Electronic and Electrical Equipment and Components, Photographic and Optical goods as identified by the SIC Codes specified in Table D-1 of Appendix D of the permit.

8.AC.2 Additional Requirements.

No additional sector-specific requirements apply.

Part 8 – Sector-Specific Requirements for Industrial Activity

Subpart AD – Sector AD – Stormwater Discharges Designated by the Director as Requiring Permits.

You must comply with Part 8 sector-specific requirements associated with your primary industrial activity and any co-located industrial activities, as defined in Appendix A. The sector-specific requirements apply to those areas of your facility where those sector-specific activities occur. These sector-specific requirements are in addition to any requirements specified elsewhere in this permit.

8.AD.1 Covered Stormwater Discharges.

Sector AD is used to provide permit coverage for facilities designated by the Director as needing a stormwater permit, and any discharges of stormwater associated with industrial activity that do not meet the description of an industrial activity covered by Sectors A-AC.

8.AD.1.1 ***Eligibility for Permit Coverage.*** Because this sector is primarily intended for use by discharges designated by the Director as needing a stormwater permit (which is an atypical circumstance), and your facility may or may not normally be discharging stormwater associated with industrial activity, you must obtain the Director's written permission to use this permit prior to submitting an NOI. If you are authorized to use this permit, you will still be required to ensure that your discharges meet the basic eligibility provisions of this permit at Part 1.1.

8.AD.2 Sector-Specific Benchmarks and Effluent Limits. (See also Part 6)

The Director will establish any additional monitoring and reporting requirements for your facility prior to authorizing you to be covered by this permit. Additional monitoring requirements would be based on the nature of activities at your facility and your stormwater discharges.

9. Permit Conditions Applicable to Specific States, Indian Country Lands, or Territories

9.1 EPA Region 1: Connecticut, Massachusetts, Maine, New Hampshire, Rhode Island, Vermont.

9.1.1 CTR05I000: Indian Country within the State of Connecticut

No additional requirements.

9.1.2 MAR050000: Commonwealth of Massachusetts, except Indian country

Permittees in the Commonwealth of Massachusetts must meet the following conditions:

9.1.2.1 ***Additional conditions required by the Commonwealth of Massachusetts.*** Discharges covered by the general permit must comply with the provisions of 314 CMR 3.00; 314 CMR 4.00; 314 CMR 9.00; and 314 CMR 10.00 and any other related policies adopted under the authority of the Massachusetts Clean Waters Act, MGL c.21, ss. 26-53 and Wetlands Protection Act, MGL s. 40.

New facilities or redevelopment of existing facilities subject to this permit must comply with applicable stormwater performance standards prescribed by state regulation or policy. A permit under 314 CMR 3.04 is not required for existing facilities which meet state stormwater performance standards. An application for a permit under 314 CMR 3.00 is required only when required under 314 CMR 3.04(2)(b) {designation of a discharge on a case-by-case basis} or is otherwise identified in 314 CMR 3.00 or any Massachusetts Department of Environmental Protection policy as a discharge requiring a permit application. Department regulations and policies may be obtained through the State House Bookstore or online at www.mass.gov/dep.

9.1.2.2 ***SWPPP Availability.*** The Department may request a copy of the Stormwater Pollution Prevention Plan (SWPPP) and the permittee is required to submit the SWPPP to the Department within 14 days of such a request.

9.1.2.3 ***Authorization to Inspect.*** The Department may conduct an inspection of any facility covered by this permit to ensure compliance with state law requirements, including state water quality standards. The Department may enforce its certification conditions.

9.1.2.4 ***Submission of Monitoring Data.*** The results of any monitoring [four samples required in the first year of the permit] required by this permit must be sent to the appropriate Regional Office of the Department [attention: Bureau of Waste Prevention] where the monitoring identifies violations of any effluent limits or benchmarks for any parameter for which monitoring is required under this permit. In addition, any follow-up monitoring and a description of the corrective actions required and undertaken to meet the effluent limits or benchmarks must be sent to the appropriate Department Regional Office.

9.1.2.5 ***Sector-Specific Requirements.*** The Massachusetts Coastal Zone Management Program submitted the following conditions to be added to the permit in order to meet the Programs' Consistency Review and which are included in the requirements of this Water Quality Certification:

- In Sector Q [Water Transportation] add copper to the required monitoring parameters with a benchmark monitoring concentration as included in the MSGP 2015 Fact Sheet Part X.B.1, and Appendix J.
- In Sector R [Ship and Boat Building and Repair Yards] add aluminum, iron, lead and copper to the list of required monitoring parameters with a benchmark monitoring concentration as included in the MSGP 2015 Fact Sheet Part X.B.1 and Appendix J.
- Modify the monitoring requirements [Part 6.2.1.2] for Sectors Q and R such that all four of the quarterly monitoring samples must meet the benchmarks rather than the average of the four before no further monitoring is required.

9.1.3 MAR05I000: Indian country within the Commonwealth of Massachusetts

No additional requirements.

9.1.4 NHR050000: State of New Hampshire

Permittees in New Hampshire must also meet the following conditions:

9.1.4.1 ***Consider Opportunities for on-site infiltration of stormwater.*** In Part 2.1.1 Control Measure Selection and Design Considerations, you are required to consider opportunities for infiltrating runoff onsite. This is encouraged, but it should only be done if consistent with the statutes and rules of the Department of Environmental Services written to protect groundwater, including Env-Wq 1507.04(e). Infiltration best management practices are not recommended at industrial sites except in areas where industrial activities do not occur, such as at office buildings and their associated parking facilities, or in drainage areas at the facility where a certification of no exposure will always be possible [see 40 CFR 122.26(g)].

9.1.4.2 ***Maintenance of Infiltration Best Management Practices.*** In Part 2.1.2.3 you are required to maintain control measures. In Parts 5.2.2, 5.2.5.1, and 5.5 you are required to document the location of control measures, perform inspections and maintenance, and keep records. Accordingly, the SWPPP must contain the following:

- A description of and the location of each on-site infiltration BMP installed;
- The maintenance procedures that will be followed to ensure proper operation, including the removal of sediment from pretreatment devices;
- The inspection produces that will be followed at least annually. These should include the produces for ensuring that the stormwater being infiltrated is not exposed to industrial pollutants and the procedures for ensuring proper drainage to prevent mosquito breeding;
- The employee name (or title of the position) who is a member of the stormwater pollution prevention team (see Part 5.2.1) who will be responsible for the maintenance required in this section, the inspection required in this section, and any necessary corrective action required in Part 4; and
- Records for all maintenance performed, inspections conducted, and corrective actions taken.

9.1.4.3 ***Discontinue, Permit or Register On-site Infiltration BMP if Necessary.*** If at any time a certification of no exposure can no longer be made for any of the stormwater to be infiltrated, then the infiltration BMP must cease for that portion of the runoff or

the discharge must be permitted or registered as appropriate. The following may be required:

- Infiltration BMP that meets the definition of a Class V well or that infiltrates stormwater via a subsurface structure (i.e. concrete chambers, dry well, leach field, etc.) will need an underground injection control (UIC) registration from NHDES; and
- Permitting as a groundwater discharge as required in Env-Wq 402, if the stormwater will or may contain regulated contaminants.

The SWPPP must be modified immediately if new infiltration BMPs are proposed or if existing infiltration BMPs will cease.

9.1.4.4 Required NHDES notification.

- Notify the NHDES Groundwater Discharge Permit Coordinator immediately if you believe that any infiltration BMP may need to be permitted or registered (See Part 9.1.4.3) during the permit term.
- Notify the NHDES Wastewater Engineering Bureau immediately of any plans to discharge any new non-stormwater discharges during the permit term. This does not include the allowable non-stormwater discharges listed in Part 1.1.3.

9.1.4.5 Information That May Be Requested by NHDES. To ensure compliance with RSA 485-C, RSA 485-A, RSA 485-A:13, I(a), Env-Wq 400 and Env-Wq 401 the following information may be requested by NHDES. This information must be kept on site unless you receive a written request from NHDES that it be sent to the address shown in Part 9.1.4.6.

- The site map required in Part 5.2.2, showing the type and location of all on-site infiltration BMP utilized at the facility or the reason(s) why none were installed.
- A list of all non-stormwater discharges that occur at the facility, including their source locations and the control measures being used (See Sections 1.1.3 and 5.2.3.4).
- A copy of the Annual Reports required in Part 7.5

9.1.4.6 Where to Submit Information. Information submitted to NHDES must be sent to the following address:

NH Department of Environmental Services
Wastewater Engineering Bureau, Permits & Compliance Section
P.O. Box 95
Concord, NH 03302-0095

9.1.4.7 Modification of Clean Water Act Section 401 Water Quality Certification. When NHDES determines that additional water quality certification requirements are necessary to protect water quality, it may require individual dischargers to meet additional conditions to obtain or continue coverage under the MSGP. Any such conditions shall be supplied to the permittee in writing. Any required pollutant loading analyses and any designs for structural best management practices necessary to protect water quality must be prepared by a civil or sanitary engineer registered in New Hampshire.

9.1.5 RIR05I000: Indian country within the State of Rhode Island

No additional requirements.

9.1.6 VTR05F000: Areas in the State of Vermont subject to industrial activity by a Federal Operator

No additional requirements.

9.2 EPA Region 2: New Jersey, New York, Puerto Rico, Virgin Islands.

9.2.1 PRR050000: Commonwealth of Puerto Rico

No additional requirements.

9.3 EPA Region 3: Delaware, District of Columbia, Maryland, Pennsylvania, Virginia, West Virginia.

9.3.1 DCR050000: District of Columbia

Permittees in the District of Columbia must also meet the following conditions:

9.3.1.1 ***Compliance with District of Columbia Laws and Regulations.*** Discharges covered by the MSGP must comply with the District of Columbia Water Pollution Control Act of 1984, as amended, D.C. Official Code § 8-103.01 *et seq*.; and its implementing regulations in Title 21, Chapters 11 and 19 of the District of Columbia Municipal Regulations. Nothing in this permit will be construed to preclude the institution of any legal action or relieve the permittee from any responsibilities, liabilities, or penalties established pursuant to District of Columbia laws and regulations.

9.3.1.2 ***Submission of SWPPP.*** The Stormwater Pollution Prevention Plan (SWPPP) shall be submitted to the District Department of the Environment (DDOE) at the same time the Notice of Intent (NOI) is submitted to EPA.

9.3.1.3 ***Submission of No Exposure Certification and NOT.*** Copies of the No Exposure Certification and Notice of Termination (NOT) shall be submitted to DDOE at the same time they are submitted to EPA.

9.3.1.4 ***Authorization to Inspect.*** The permittee shall allow DDOE to inspect any facility, equipment, practices, or operations regulated or required under this permit and to access records maintained under the conditions of this permit.

9.3.1.5 ***Submission of Reports.*** Signed copies of all reports required under this permit including the reporting requirements of Appendix B.12 shall be submitted to DDOE at the same time they are submitted to EPA.

9.3.1.6 ***Where to Submit Information.*** All required or requested documents shall be sent to the:

Attention: Associate Director
Water Quality Division, Natural Resources Administration
District Department of the Environment
1200 First Street, NE, 5th Floor
Washington, D.C. 20002

9.3.2 DER05F000: Areas in the State of Delaware subject to industrial activity by a Federal Operator

No additional requirements.

9.4 EPA Region 4: Alabama, Florida, Georgia, Kentucky, Mississippi, North Carolina, South Carolina, Tennessee

Coverage not available under this permit.

9.5 EPA Region 5: Illinois, Indiana, Michigan, Minnesota, Ohio, Wisconsin.

9.5.1 MIR05I000: Indian country within the State of Michigan

No additional requirements.

9.5.2 MNR05I000: Indian country within the State of Minnesota

9.5.2.1 Fond du Lac Reservation

The following conditions apply only to discharges on the Fond du Lac Reservation.

9.5.2.1.1 Submission of SWPPP. A copy of the Stormwater Pollution Plan (SWPPP) must be submitted to the Office of Water Protection at least thirty (30) days in advance of sending the Notice of Intent to EPA. MSGP applicants are encouraged to work with the Fond du Lac Office of Water Protection in the identification of all proposed receiving waters.

9.5.2.1.2 Submission of NOI and NOT. Copies of the Notice of Intent (NOI) and Notice of Termination (NOT) must be sent to the Fond du Lac Office of Water Protection at the same time they are submitted to EPA.

9.5.2.1.3 Benchmark Monitoring for Turbidity. The Benchmark Monitoring Concentration (BMC) for Turbidity shall NOT exceed 10% of natural background as determined by Office of Water Protection staff as measured in NTU.

9.5.2.1.4 Effluent Limitations. The Effluent Limitations for ALL sectors shall NOT exceed more than two times (2x) Fond du Lac's ambient concentrations (based upon 15 years of monitoring data) for the following:

a) Ammonia	Ambient = <0.3 mg/l
b) Arsenic	Ambient = <3.0 µg/l
c) Chromium	Ambient = <0.8 µg/l
d) Total Phosphorus	Ambient = <0.09 mg/l
e) Total Suspended Solids	Ambient = <16.0 mg/l
f) Zinc	Ambient = <24.0 mg/l

9.5.2.1.5 Outstanding Reservation Resource Waters (ORRW). This Certification does not pertain to any new discharge to Outstanding Reservation Resource Waters (ORRW) as described in § 105 b.3. of the Fond du Lac Water Quality Standards (Ordinance #12/98). Although additional waters may be designated in the future, currently Perch Lake, Rice Portage Lake, Miller Lake, Deadfish Lake, and Jaskari Lake are designated as ORRWs. New dischargers wishing to discharge to an ORRW must obtain an individual permit for storm water discharges.

9.5.2.1.6 ***Water Quality Criteria.*** All industrial activities shall be carried out in such a manner as will prevent violations of water quality criteria as stated in the Water Quality Standards of the Fond du Lac Reservation, Ordinance 12/98, as amended. This includes, but is not limited to, the prevention of any discharge that causes a condition in which visible solids, bottom deposits, or turbidity impairs the usefulness of water of the Fond du Lac Reservation for any of the uses designated in the Water Quality Standards of the Fond du Lac Reservation. These uses include wildlife, aquatic life, warm and cold water fisheries, subsistence farming (netting), primary contact recreation, cultural, wild rice areas, aesthetic waters, agriculture, navigation, and commercial.

9.5.2.1.7 ***Impacts to cultural sites.*** This certification does not authorize impacts to cultural, historical, or archeological features or sites, or properties that may be eligible for such listing.

9.5.2.1.8 ***Where to Submit Information.*** All required or requested documents shall be sent to the:

Fond du Lac Reservation
Office of Water Protection
1720 Big Lake Road
Cloquet, Minnesota 55720

9.5.2.2 ***Grand Portage Band of the Minnesota Chippewa Tribe***

The following conditions apply to industrial storm water discharges into Waters of the Grand Portage Reservation:

9.5.2.2.1 ***Definitions.*** The definitions set forth in the Grand Portage Water Resources Ordinance, as amended, ("Water Resources Ordinance") govern these certification conditions.

9.5.2.2.2 ***Water Quality Standards.*** All industrial storm water discharges authorized by this permit must comply with the Grand Portage Water Quality Standards, Applicable Federal Standards, and the Water Resources Ordinance.

9.5.2.2.3 ***Additional Monitoring.*** Grand Portage reserves the right to require monitoring of storm water discharges as determined on a case-by-case basis. If the Grand Portage Environmental Resources Board ("Board") determines that a monitoring plan is necessary, the monitoring plan must be prepared and incorporated into the Storm Water Pollution Prevention Plan ("SWPPP") before the SWPPP is submitted to the U.S. EPA. Accordingly, the Board must be contacted, at the address listed below, at the onset of writing the SWPPP.

9.5.2.2.4 ***Submission of SWPPP, NOI, and NOT.*** In addition, a copy of the SWPPP, Notice of Intent ("NOI"), and Notice of Termination (NOT) (collectively the "application") must be submitted to the Board at least 30 days before submitting the NOI to the U.S. EPA. Applications should be sent to the address below.

9.5.2.2.5 ***Additional information.*** Upon receipt of the application, the Board shall order the Grand Portage Environmental Department (Department) to conduct a technical review of the application materials. If necessary, Department staff will send a

request for additional information to the applicant within 30 days of receipt of the application.

9.5.2.2.6 ***Preliminary coverage determination.*** After considering the application and such other information and data as the Department staff deems relevant, the Department Director will evaluate whether there is a reasonable probability that the proposed activity will violate the Grand Portage Water Quality Standards or any Applicable Federal Standards and recommend one of the following preliminary determinations:

- Unconditionally grant coverage under the MSGP;
- Grant coverage under the MSGP subject to certain conditions; or
- Deny coverage under the MSGP.

9.5.2.2.7 ***Final coverage determination.*** Within 30 days of the Department Director's recommendation, the Board will provide public notice of the application for coverage under the MSGP and the Department Director's recommendations. Upon request, the Department will schedule a hearing as provided in 40 CFR Part 25. If, after considering the evidence provided at the hearing and the entire record, the Board determines by a preponderance of the evidence that the proposed activity will violate the Grand Portage Water Quality Standards or any Applicable Federal Standards, the Board shall deny eligibility for coverage under the MSGP, unless there is a reasonable certainty that compliance can be achieved by the applicant's adherence to reasonable conditions. If the Board finds insufficient evidence to show that the proposed activity will violate the Grand Portage Water Quality Standards or any Applicable Federal Standards, it shall approve coverage under the MSGP.

9.5.2.2.8 ***Appeals.*** Appeals related to water quality certification decisions or permits will be heard by the Grand Portage Tribal Court.

9.5.2.2.9 ***Prohibition of Discharge.*** The applicant is prohibited from discharging into the Waters of the Reservation pursuant to the MSGP unless the Board has granted coverage under the MSGP, or until the applicant has adhered to conditions required by the Board's conditional grant of coverage.

9.5.2.2.10 ***Compliance.*** The Board retains full authority provided by the Water Resources Ordinance to ensure compliance with and enforce the provisions of the Water Resource Ordinance, the Grand Portage Water Quality Standards, Applicable Federal Standards, and these certification conditions.

9.5.2.2.11 ***Where to Submit Information.*** All required or requested information mentioned above shall be sent to:

Grand Portage Environmental Resources Board
P.O. Box 428
Grand Portage, MN 55605

9.5.3 WIR05I000: Indian country within the State of Wisconsin, except those on Bad River Band of Lake Superior Tribe of Chippewa Indians lands and on Sokaogon Chippewa Community lands

No additional requirements.

Note: Facilities in the Bad River Band of Lake Superior Tribe of Chippewa Indians land Sokaogon Chippewa Community lands and are not eligible for stormwater discharge coverage under this permit. Contact the EPA Region 5 office for an individual permit application.

9.6 EPA Region 6: Arkansas, Louisiana, Oklahoma, Texas, and New Mexico (except see Region 9 for Navajo lands, and see Region 8 for Ute Mountain Reservation lands).

9.6.1 LAR05I000: Indian country within the State of Louisiana

No additional requirements.

9.6.2 NMR050000: The State of New Mexico, except Indian country

Permittees in New Mexico must also meet the following conditions:

9.6.2.1 ***Benchmark Monitoring Concentrations.*** The benchmark values for the indicated pollutants in the table below must be modified to reflect New Mexico water quality standards for the facilities in New Mexico, based on benchmark values from the *Standards for Interstate and Intrastate Surface Waters* (as approved on June. 5, 2013), 20.6.4.900 NMAC).

Pollutant	MSGP Benchmark	Lowest New Mexico Water Quality Standard	Hardness dependent value (if appropriate)[1]
Ammonia*	2.14 mg/L	No Standard	
Biochemical Oxygen Demand (BOD 5 day)	30 mg/L	No Standard	
Chemical Oxygen Demand (COD)	120 mg/L	No Standard	
Total Suspended Solids	100 mg/L	Segment specific	
Turbidity	50 NTU	Segment specific	
Nitrate + Nitrite Nitrogen	0.68 mg/L	132 mg/L	
Total Phosphorus	2.0 mg/L	Segment specific	
pH	6.0 – 9.0 SU	Segment specific	
Aluminum (T) (pH 6.5 – 9)*	0.75 mg/L	--	3.4 mg/L (acute) 1.37 mg/L (chronic)
Antimony (T)	0.64 mg/L	0.006 mg/L	
Arsenic (T) (Freshwater)*	0.15 mg/L	0.01 mg/L	
Beryllium (T)	0.13 mg/L	0.004 mg/L	
Cadmium (T) (Freshwater)*	0.0021 mg/L	--	0.00165 mg/L (acute) 0.00045 mg/L (chronic)
Copper (T) (Freshwater)*	0.014 mg/L	--	0.013 mg/L (acute) 0.009 mg/L (chronic)
Cyanide (Freshwater)*	0.022 mg/L	0.0052 (WH)	
Iron (T)	1.0mg/L	No standard	
Lead (Freshwater)*	0.082 mg/L		0.065 mg/L (acute) 0.003 mg/L (chronic)
Magnesium (T)	0.064 mg/L	No standard	
Mercury (Freshwater)*	0.0014 mg/L	0.00077 mg/L	
Nickel (T) (Freshwater)*	0.47 mg/L		0.47 mg/L (acute) 0.052 mg/L (chronic)
Selenium (T) (Freshwater)* [2]	0.005 mg/L	0.005 mg/L (WH)	

Pollutant	MSGP Benchmark	Lowest New Mexico Water Quality Standard	Hardness dependent value (if appropriate)[1]
Silver (Freshwater)*	0.0038 mg/L		0.0032 mg/L (acute)
Zinc (T) (Freshwater)*	0.12 mg/L		0.16 mg/L (acute) 0.121 mg/L (chronic)

* EPA's Criteria are based on receiving water hardness of 100 mg/L. The facility will need to test their receiving water these hardness values and use Table 1 in Appendix J of this permit to determine their applicable limit.

[1] New Mexico Environment Department's criteria are listed at a hardness value of 100 mg/L as $CaCO_3$ for comparison to EPA's benchmark standard.

[2] SO_4 dependent

EPA defines saline/salt waters as having salinity concentrations greater than or equal to 10 parts per thousand 95 percent or more of the time (as discussed on Page 55 of the permit's proposed fact sheet). Saltwater values may apply to certain areas of New Mexico, such as the Pecos Basin below Santa Rosa and the Rio Grande below Elephant Butte. These values may also apply to waters that are part of the Colorado River Basin.

New Mexico water quality hardness-based values in the table below replace values listed in Appendix J and are the applicable benchmark values for New Mexico in this permit.

All Units mg/L	*	(mg/L, dissolved)						
		Aluminum	Cadmium	Copper	Lead	Nickel	Silver	Zinc
25	Acute	0.512	0.00051	0.004	0.014	0.140	0.0003	0.045
	Chronic	0.205	0.00017	0.003	0.001	0.016		0.034
30	Acute	0.658	0.00059	0.004	0.017	0.170	0.0004	0.054
	Chronic	0.263	0.00019	0.003	0.001	0.019		0.041
40	Acute	0.975	0.00076	0.006	0.024	0.220	0.0007	0.070
	Chronic	0.391	0.00023	0.004	0.001	0.024		0.053
50	Acute	1.324	0.00091	0.007	0.03	0.260	0.0010	0.085
	Chronic	0.530	0.00028	0.005	0.001	0.029		0.065
60	Acute	1.699	0.00107	0.008	0.037	0.300	0.0013	0.101
	Chronic	0.681	0.00031	0.006	0.001	0.034		0.076
70	Acute	2.099	0.00122	0.010	0.044	0.350	0.0017	0.116
	Chronic	0.841	0.00035	0.007	0.002	0.038		0.088
80	Acute	2.520	0.00137	0.011	0.051	0.390	0.0022	0.131
	Chronic	1.010	0.00039	0.007	0.002	0.043		0.099
90	Acute	2.961	0.00151	0.012	0.058	0.430	0.0027	0.145
	Chronic	1.186	0.00042	0.008	0.002	0.048		0.110
100	Acute	3.421	0.00165	0.013	0.065	0.470	0.0032	0.160
	Chronic	1.370	0.00045	0.009	0.003	0.052		0.121
200	Acute	8.838	0.00298	0.026	0.14	0.840	0.011	0.301
	Chronic	3.541	0.00075	0.016	0.005	0.09		0.228
220	Acute	10.071						
	Chronic	4.035						
300	Acute	10.071	0.00421	0.038	0.210	1.190	0.021	0.435
	Chronic	4.035	0.00100	0.023	0.008	0.130		0.329
400+	Acute	10.071	0.00538	0.050	0.280	1.510	0.035	0.564
	Chronic	4.035	122	0.029	0.011	0.170		428

*Acute vs. Chronic applicability: Acute numeric standards shall be attained at the "point of discharge" (end-of-pipe) for any discharge to surface water with a *designated aquatic life use*. TSS values will be important for any criteria differences between total and dissolved measurements.

9.6.2.2 ***Notice of Termination.*** Requirements in Part 8 of the this permit, in sectors G (Metal Mining), H (Coal Mines and Coal Mining-Related Facilities), I (Oil and Gas Extraction), and J (Non-Metallic Mineral Mining and Dressing), at the Requirements Applicable to Earth-Disturbing Activities Conducted Prior to Active Mining Activities" section were made more stringent as to inspection frequencies and timing of inspections and corrective actions required as a result of a rain event. These certification requirements will apply to these sectors mentioned in this condition, as follows:

Permittees can only use the option to "plant the area so that within 3 years the 70% cover requirement is met" as stated in Part 8.G.4.2.11, Part 8.H.4.2.11, and Part 8.J.4.2.11 of this Permit, in New Mexico as a method for final vegetative stabilization for purposes of filing a Notice of Termination (NOT) under the following conditions:

If this option is selected, you must notify New Mexico Environment Department (NMED) at the address listed below at the time the NOT is submitted to EPA. The information to be submitted includes:

- A copy of the NOT;
- Contact information, including individual name or title, address, and phone number for the party responsible for implementing the final stabilization measures; and
- The date that the permanent vegetative stabilization practice was implemented and the projected timeframe that the 70% native vegetative cover requirements are expected to be met. (Note that if more than three years is required to establish 70 percent of the natural vegetative cover, this technique cannot be used or cited for fulfillment of the final stabilization requirement- you remain responsible for establishment of final stabilization.)

NMED also requires that operators periodically (minimum once/year) inspect and properly maintain the area until the criteria for final stabilization, as specified in Part 2.2 of the Construction General Permit (CGP), have been met. Operators must prepare an inspection report documenting the findings of these inspections and signed in accordance with Appendix B.11. This inspection record must be retained along with the SWPPP for three years after the NOT is submitted for the site and additionally submitted to NMED at the address listed below. The inspections must at a minimum include the following:

- Observations of all areas of the site disturbed by construction activity;
- Best Management Practices (BMPs)/post-construction storm water controls must be observed to ensure they are effective;
- An assessment of the status of vegetative re-establishment; and
- Corrective actions required to ensure vegetative success within three years, and control of pollutants in storm water runoff from the site, including implementation dates.

9.6.2.3 ***Where to Submit Information.*** All required or requested information mentioned above shall be sent to:

Program Manager
Point Source Regulation Section
NMED Surface Water Quality Bureau
PO Box 5469
Santa Fe, NM 87502

9.6.3 NMR05I000: Indian country within the State of New Mexico, except Ute Mountain Reservation lands that are covered under Colorado permit COR05I000 and Navajo Reservation lands that are covered under Arizona permit AZR05I000

9.6.3.1 Pueblo of Sandia

The following conditions apply only to discharges on the Pueblo of Sandia:

9.6.3.1.1 ***Submission of NOI.*** Copies of all Notices of Intent (NOI) submitted to the EPA must also be sent concurrently to the Pueblo of Sandia Environment Department. Discharges are not authorized by this permit unless an accurate and complete NOI has been submitted to the Pueblo of Sandia.

9.6.3.1.2 ***SWPPP Availability.*** The Stormwater Pollution Prevention Plan (SWPPP) must be available to the Pueblo of Sandia Environment Department either electronically or hard copy upon request for review. Failure to provide a SWPPP to the Pueblo of Sandia Environment Department may result in denial of the water quality certification.

9.6.3.1.3 ***SWPPP Amendments.*** Any Stormwater Pollution Prevention Plan (SWPPP) modification, update or amendment shall be submitted to the Pueblo of Sandia Environment Department either electronically or hard copy within seven (7) calendar days of its finalization. Failure to provide a SWPPP to the Pueblo of Sandia Environment Department may result in denial of the water quality certification.

9.6.3.1.4 ***Submission of Monitoring Data.*** All monitoring and analytical data (e.g., Discharge Monitoring Reports (DMRs), follow-up monitoring reports, Exceedance Reports for Numeric Effluent Limits, etc.) submitted to the EPA must also be sent concurrently to the Pueblo of Sandia Environment Department.

9.6.3.1.5 ***Submission of Annual Reports.*** Copies of all Annual Reports submitted to the EPA must also be sent concurrently to the Pueblo of Sandia Environment Department. Discharges are not authorized by this permit unless an accurate and complete Annual Report has been submitted to the Pueblo of Sandia.

9.6.3.1.6 ***Submission of Quarterly Visual Assessments.*** Copies of all "Quarterly Visual Assessments" (Part 3.2) must be submitted either electronically or hard copy to the Pueblo of Sandia Environment Department within seven (7) calendar days.

9.6.3.1.7 ***Submission of Corrective Action Documentation.*** Copies of all "Corrective Action Documentation" (Part 4.4) must be submitted electronically or hard copy to the Pueblo of Sandia Environment Department within seven (7) calendar days.

9.6.3.1.8 ***Additional Reporting.*** Any notice of release of oils or hazardous substances shall be submitted to the Pueblo of Sandia Environment Department within twenty-four (24)

hours of becoming aware of the situation or circumstance, followed by the reporting requirements of 40 CFR 110, 40 CFR 300, and 40 CFR 302 relating to spills or other releases of oil or hazardous substances. The permittee must also telephone the Pueblo of Sandia Environment Department at (505) 867-4533 of any non-emergency spills or unauthorized discharges that may affect drinking water supplies, ceremonial and recreational surface waters, elicit fish kills, harm wildlife or endangered and threatened species, or endanger human health or the environment within eight (8) hours of becoming aware of the situation or circumstance, followed by the written report when it is sent to the EPA.

9.6.3.1.9 ***Authorization to Inspect.*** If requested by the Pueblo of Sandia Environment Department, the permittee must allow the Pueblo of Sandia to perform its own routine or compliance inspection to ensure the permittee is in compliance and any discharge is not contributing to a violation of the permit and the Pueblo of Sandia's Water Quality Standards.

9.6.3.1.10 ***Water Quality Standards.*** If requested by the Pueblo of Sandia Environment Department, the permittee shall provide additional information necessary for a "case by case" eligibility determination to assure compliance with the Pueblo of Sandia's Water Quality Standards. *****Note: Upon receipt of a determination by the Pueblo of Sandia that discharges from a permittee under this general permit have reasonable potential to be causing or contributing to a violation of the Pueblo of Sandia's Water Quality Standards, EPA Region 6 would be notified. EPA Region 6 would then notify the permittee to either improve their Stormwater Pollution Prevention Plan (SWPPP) to achieve compliance with the Pueblo of Sandia's Water Quality Standards or have the permittee apply for and obtain an individual NPDES permit for these discharges per CFR 122.28(B)(3).

9.6.3.1.11 ***Alternative Permit.*** Any industry discharging to waters of the United States that has been designated by the EPA or the Pueblo of Sandia as impaired or degraded water shall not be covered under this general permit but will be required to obtain an individual permit.

9.6.3.1.12 ***Submission of NOT.*** Before submitting a Notice of Termination (NOT), permittees must clearly demonstrate to the Pueblo of Sandia Environment Department through a site visit or documentation that requirements for site stabilization have been met and any degradation has been mitigated. A short letter stating the stabilization requirements have been met will be sent to the permittee. Upon receipt the permittee may apply for an NOT to the EPA. Copies of the NOT submitted to the EPA must also be sent concurrently to the Pueblo of Sandia Environment Department.

9.6.3.1.13 ***Where to Submit Information.*** All required or requested information mentioned above shall be sent to:

- Regular U.S. Delivery Mail:

  Pueblo of Sandia Environment Department
  Attention: Scott Bulgrin, Water Quality Manager
  481 Sandia Loop
  Bernalillo, New Mexico 87004

- Or Electronically to: sbulgrin@sandiapueblo.nsn.us

9.6.3.2 ***Pueblo of Santa Clara.***

The following condition applies only to discharges on the Santa Clara Indian Pueblo:

9.6.3.2.1 ***Submission of NOI and NOT.*** The Notice of Intent (NOI) and Notice of Termination (NOT) must be provided to the Santa Clara Pueblo Governor's Office at the same time it is provided to EPA.

9.6.3.2.2 ***SWPPP Availability.*** A copy of the Stormwater Pollution Prevention Plan must be made available to the Pueblo of Santa Clara staff upon request.

9.6.3.2.3 ***Where to Submit Information.*** All required or requested documents shall be sent to the:

Santa Clara Pueblo
Governor's Office
P.O. Box 580
Espanola, NM 87532

9.6.4 OKR05I000: Indian country within the State of Oklahoma

9.6.4.1 ***Certification Requirements.*** In accordance with Oklahoma's Water Quality Standards (OAC 785:45-5-25) certification is denied for any new or proposed discharges located within the watershed of any part of the Oklahoma Scenic Rivers system, including the Illinois River, Flint Creek, Barren Fork Creek, Upper Mountain Fork Creek, Little Lee Creek, Big Lee Creek or to any water designated as an Outstanding Resource Water (ORW). Existing discharges of stormwater in these watersheds may be permitted under this permit only from point sources existing as of June 25, 1992, whether or not such stormwater discharges were permitted as point sources prior to June 25, 1992. For any such existing discharge, increased load of any pollutant above levels of June 25, 1992 is prohibited.

Note: Operators of facilities within the watershed of any part of the Oklahoma Scenic Rivers system must contact the EPA Region 6 office for an individual permit application.

9.6.5 OKR05F000: Facilities in the State of Oklahoma not under the jurisdiction of the Oklahoma Department of Environmental Quality or the Oklahoma Department of Agriculture, Food and Forestry, except those on Indian Country. EPA jurisdiction facilities include SIC Codes 1311, 1381, 1382, 1389, and 5171

9.6.5.1 ***Certification Requirements.*** In accordance with Oklahoma's Water Quality Standards (OAC 785:45-5-25), Certification is denied for any new or proposed discharges located within the watershed or any part of the Oklahoma Scenic Rivers system, including the Illinois River, Flint Creek, Barren Fork Creek, Upper Mountain Fork River, Little Lee Creek, Big Lee Creek or to any water designated as an Outstanding Resource Water (ORW). Existing discharges of stormwater in these watersheds may be permitted under this permit only from point sources existing as of June 25, 1992, whether or not such stormwater discharges were permitted as point sources prior to June 25, 1992. For any such existing discharge, increased load of any pollutant above levels of June 25, 1992 is prohibited.

Note: Operators of facilities within the watershed of any part of the Oklahoma Scenic Rivers system must contact the EPA Region 6 office for an individual permit application.

9.6.6 TXR05F000: Facilities in the State of Texas not under the jurisdiction of the Texas Commission on Environmental Quality, except those on Indian Country. EPA-jurisdiction facilities include SIC Codes 1311, 1321, 1381, 1382, and 1389 (other than oil field service company "home base" facilities)

No additional requirements.

9.6.7 TXR05I000: Indian country within the State of Texas

No additional requirements.

9.7 EPA Region 7: Iowa, Kansas, Missouri, Nebraska (except see Region 8 for Pine Ridge Reservation Lands).

9.7.1 IAR05I000: Indian country within the State of Iowa

No additional requirements.

9.7.2 KSR05I000: Indian country within the State of Kansas

No additional requirements.

9.7.3 NER05I000: Indian country within the State of Nebraska, except Pine Ridge Reservation lands (see Region 8)

No additional requirements.

9.8 EPA Region 8: Colorado, Montana, North Dakota, South Dakota, Wyoming, Utah (except see Region 9 for Goshute Reservation and Navajo Reservation Lands), the Ute Mountain Reservation in NM, and the Pine Ridge Reservation in NE.

9.8.1 COR05F000: Areas in the State of Colorado, except those located on Indian country, subject to industrial activity by a Federal Operator

No additional requirements.

9.8.2 COR05I000: Indian country within the State of Colorado, as well as the portion of the Ute Mountain Reservation located in New Mexico

No additional requirements

9.8.3 MTR05I000: Indian country within the State of Montana

No additional requirements.

9.8.4 NDR05I000: Indian country within the State of North Dakota, as well as that portion of the Standing Rock Reservation located in South Dakota (except for the portion of the lands within the former boundaries of the Lake Traverse Reservation which is covered under South Dakota permit SDR05I000 listed below)

No additional requirements.

9.8.5 SDR05I000: Indian country within the State of South Dakota, as well as the portion of the Pine Ridge Reservation located in Nebraska and the portion of the lands within the former boundaries of the Lake Traverse Reservation located in North Dakota

(except for the Standing Rock Reservation which is covered under North Dakota permit NDR05I000 listed above)

No additional requirements.

9.8.6 UTR05I000: Indian country within the State of Utah, except Goshute and Navajo Reservation lands (see Region 9)

No additional requirements.

9.8.7 WYR05I000: Indian country within the State of Wyoming

No additional requirements.

9.9 EPA Region 9: California, Hawaii, Nevada, Guam, American Samoa, the Commonwealth of the Northern Mariana Islands, the Confederated Tribes of the Goshute Reservation in Utah and Nevada, Indian Country within the State of Arizona including the Navajo Reservation in Utah and New Mexico and Arizona, the Duck Valley Reservation in Idaho, and the Fort McDermitt Reservation in Oregon.

9.9.1 ASR050000: American Samoa

No additional requirements.

9.9.2 AZR05I000: Indian country within the State of Arizona, including Navajo Reservation lands in New Mexico and Utah

9.9.2.1 Hualapai Tribe

The following condition applies only to discharges on the Hualapai Tribe:

9.9.2.1.1 Submission of NOI and SWPPP. All Notices of Intent (NOI) for proposed stormwater discharges under this permit and all Stormwater Pollution Plans (SWPPPs) for stormwater discharges on Hualapai Tribal lands shall be submitted to the Water Resource Program through the Tribal Chairwoman for review and approval.

9.9.2.1.2 Where to Submit Information. All required or requested documents shall be sent to:

Water Resource Program through the Tribal Chairwoman
P.O. Box 179
Peach Springs, AZ 86434

9.9.2.2 Navajo Nation

The following conditions apply only to discharges on the Navajo Nation:

9.9.2.2.1 Submission of NOI and SWPPP. Courtesy copies of Notices of Intent (NOI) and Stormwater Water Pollution Plans (SWPPPs) shall be made available to Navajo EPA for facilities located on Navajo lands.

9.9.2.2.2 Submission of Monitoring Data. Copies of all monitoring reports must be provided to Navajo EPA for facilities located on Navajo lands.

9.9.2.2.3 Authorization to Inspect. Facilities located on Navajo lands and covered under this permit will be subject to compliance inspections by Navajo EPA staff with active Federal Inspector Credentials under authority of the Clean Water Act.

9.9.2.3 *White Mountain Apache Tribe*

The following condition applies only to discharges on the White Mountain Apache Tribe:

9.9.2.3.1 ***Submission of SWPPP.*** The Storm Water Pollution Prevention Plan (SWPPP) must be available to the White Mountain Apache Water Resources Programs either electronically or hard copy upon request for review before a Notice of Intent (NOI) for comments from the White Mountain Apache Water Resources Programs. Failure to provide a SWPPP to the White Mountain Apache Water Resources Programs may result in denial of the water quality certification.

9.9.2.3.2 **Submission of NOI.** Copies of all Notices of Intent (NOI)) submitted to the EPA must also be sent concurrently to the White Mountain Apache Water Resources Programs. Discharges are not authorized by this permit unless an accurate and complete NOI has been submitted to the White Mountain Apache Tribe.

9.9.2.3.3 ***SWPPP Modification.*** Any Storm Water Pollution Prevention Plan (SWPPP) modification, update or amendment shall be submitted to the White Mountain Apache Water Resources Programs either electronically or hard copy within seven (7) calendar days of its finalization. Failure to provide a SWPPP to the White Mountain Apache Water Resources Programs may result in denial of the water quality certification.

9.9.2.3.4 ***Submission of Monitoring Data.*** All monitoring and analytical data (e.g. Discharge Monitoring Reports (DMRs), follow-up monitoring reports, Exceedance Reports for Numerical Effluent Limits, etc.) submitted to EPA must also be sent concurrently to the White Mountain Apache Water Resources Programs.

9.9.2.3.5 ***Submission of Annual Reports.*** Copies of all Annual Reports submitted to the EPA must also be sent concurrently to the White Mountain Apache Water Resources Programs. Discharges are not authorized by this permit unless an accurate and complete Annual Report has been submitted to the White Mountain Apache Tribe.

9.9.2.3.6 ***Submission of Quarterly Visual Assessments.*** Copies of all "Quarterly Visual Assessments" (Part 3.2) must be submitted either electronically or hard copy to the White Mountain Apache Water Resources Programs within seven (7) calendar days.

9.9.2.3.7 ***Submission of Corrective Action Documentation.*** Copies of all "Corrective Action Documentation" (Part 4.4) must be submitted either electronically or hard copy to the White Mountain Apache Water Resources Programs within seven (7) calendar days.

9.9.2.3.8 ***Additional Reporting.*** Any notice of release of oils or hazardous substances shall be submitted to the White Mountain Apache Water Resources Programs within twenty-four (24) hours of becoming aware of the situation or circumstance, followed by the reporting requirements of 40 CFR 110, 40 CFR 300, and 40 CFR 302 relating to spills or other releases of oils or hazardous substances. The permittee must also telephone the White Mountain Apache Water Resources Programs at (928) 338-4267 of any non-emergency spills or unauthorized discharge that may affect drinking water, supplies, ceremonial and recreational surface waters, elicit fish kills, harm wildlife or endangered and threaten species, or endanger human health or

the environment within eight (8) hours of becoming aware of the situation or circumstance, followed by a written report when it is sent to the EPA.

9.9.2.3.9 ***Authorization to Inspect.*** If requested by the White Mountain Apache Water Resources Programs, the permittee must allow the White Mountain Apache Tribe to perform its own routine or compliance inspection to ensure the permittee is in compliance and any discharge is not contributing to a violation of the permit and the White Mountain Apache Tribe's Water Quality Standards.

9.9.2.3.10 ***Water Quality Standards.*** If requested by the White Mountain Apache Water Resources Programs, the permittee shall provide additional information necessary for a "case by case" eligibility determination to assure compliance with the White Mountain Apache Tribe's Water Quality Standards. *Note: Upon receipt of a determination by the White Mountain Apache Tribe that discharges from a permittee under this general permit have reasonable potential to be causing or contributing to a violation of the White Mountain Apache Tribe's Water Quality Standards, EPA Region 9 would be notified. EPA Region 9 would then notify the permittee to either improve their Stormwater Pollution Prevention Plan (SWPPP) to achieve compliance with the White Mountain Apache Tribe's Water Quality Standards or have the permittee apply for and obtain an individual NPDES permit for those discharges per CFR 122.28 (B)(3).

9.9.2.3.11 ***Alternative Permit.*** Any industry discharging into waters of the United States that has been designated by the EPA or the White Mountain Apache Tribe as impaired or degraded water shall not be covered under this general permit but will be required to obtain an individual permit.

9.9.2.3.12 ***Submission of NOT.*** Before submitting a Notice of Termination (NOT), permittees must clearly demonstrate to the White Mountain Apache Water Resources Programs through a site visit or documentation that requirements for site stabilization have been met and any degradation has been mitigated. A short letter stating the stabilization requirements have been met will be sent to the permittee. Upon receipt the permittee may apply for an NOT to the EPA. Copies of the NOT submitted to the EPA must also be sent concurrently to the White Mountain Apache Water Resources Programs.

9.9.2.3.13 ***Where to Submit Information.*** All required or requested information mentioned above shall be sent to:

- Regular U.S. Delivery Mail:

  White Mountain Apache Tribe Water Resources Programs
  Attention: Tara Chief, Water Quality Officer
  P.O. Box 816
  Fort Apache, AZ 85926

- Or Electronically to: tarachief@wmat.us

9.9.3 CAR05I000: Indian country within the State of California

9.9.3.1 Hoopa Valley Tribe

The following conditions apply only to discharges on the Hoopa Valley Tribe:

9.9.3.1.1 ***Submission of NOI.*** All Notices of Intent (NOI) submitted for stormwater discharges under the general permits in Hoopa Valley Indian Reservation (HVIR) shall be submitted to the Tribal Environmental Protection Agency (TEPA).

9.9.3.1.2 ***Submission of SWPPP.*** All Stormwater Pollution Plans (SWPPPs) for stormwater discharge in HVIR shall be submitted to TEPA for review and approval.

9.9.3.2 ***Twenty-Nine Palms Band of Mission Indians***

The following conditions apply only to discharges on the Twenty-Nine Palms Band of Mission Indians:

9.9.3.2.1 ***Submission of Monitoring Data.*** The Twenty-Nine Palms Tribal Water Quality Standards require that routine monitoring be performed quarterly at each sampling site. Additional special monitoring requirements include: a) Sampling following a significant storm event; and b) Sampling in the event of an accidental spill. Monitoring results for discharges into Twenty-Nine Palms Tribal waters must be reported to Twenty-Nine Palms Tribal EPA.

9.9.3.2.2 ***Certification.*** Certification does not relieve the applicant of the responsibility to comply with applicable local, state, or federal regulations or statutes, including regulations affecting any discharge into waters of the U.S. Copies of this certification shall be kept on the job site and readily available for reference by tribal members and tribal representatives. If the project is operated in a manner not consistent with the MSGPs, the permittee will be in violation of this certification.

9.9.3.2.3 ***Pollution Prevention.*** All practicable measures and precautions must be taken to prevent pollution affecting public health, fish, shellfish, wildlife, and recreation due to turbidity, pH, temperature, nutrients, suspended solids, floating debris, visible oil and grease, or other pollutants entering tribal waters, including wetlands.

9.9.3.2.4 ***Spills or Leaks.*** All equipment operated within any tribal waters must be cleaned away from the tribal waters and maintained to prevent fuel and oil leaks. These methods include, but are not limited to: offsite/ upland fuel and oil storage and refueling areas, on-site spill containment equipment, a spill contingency plan, and spill prevention/contaminant training for on-site personnel. Should a spill of petroleum products or chemicals occur, immediately call the National Response Center at (800) 424-8802 and the Tribal Environmental Protection Agency at (760) 398-6767.

9.9.3.2.5 ***Ground Disturbance.*** Ground disturbance shall not exceed the minimum necessary.

9.9.3.2.6 ***Minimizing Adverse Impacts.*** All projects using the MSGP must avoid discharges to the maximum extent practicable, and utilize the best available and practicable means of minimizing the adverse impact of discharges that cannot be avoided.

9.9.4 GUR050000: Island of Guam

No additional requirements.

9.9.5 JAR050000: Johnston Atoll

No additional requirements.

9.9.6 MWR050000: Midway Island and Wake Island

No additional requirements.

9.9.7 MPR050000: Commonwealth of the Northern Mariana Islands

No additional requirements.

9.9.8 NVR05I000: Indian country within the State of Nevada, including the Duck Valley Reservation in Idaho, the Fort McDermitt Reservation in Oregon and the Confederated Tribes of the Goshute Reservation in Utah

No additional requirements.

9.10 Region 10: Alaska, Idaho (except see Region 9 for Duck Valley Reservation lands), Oregon (except see Region 9 for Fort McDermitt Reservation), Washington.

9.10.1 AKR05F000: Areas in the Denali National Park and Preserve subject to industrial activity by a Federal Operator

No additional requirements.

9.10.2 AKR05I000: Indian country lands within the State of Alaska

No additional requirements.

9.10.3 IDR050000: The State of Idaho, except Indian country lands

Permittees in the State of Idaho must meet the following conditions. For the complete text of Idaho's certification including the full anti-degradation analysis, please visit the IDEQ website at http://www.deq.idaho.gov/media/60177118/multi-sector-general-permit-401-certification.pdf.

9.10.3.1 ***New or Expanding Discharges.*** New dischargers or existing dischargers wishing to expand their discharge to high-quality waters are only eligible for coverage under the MSGP if the discharger establishes, to the satisfaction of EPA and DEQ, that the new or expanded discharge will not result in an increase in the concentration of pollutants relevant to the use for which the water is considered high quality, or that the increase constitutes insignificant degradation as defined in the WQS (IDAPA 58.01.02.052.08.a).

A new discharger or an existing discharger wishing to expand must include an analysis regarding whether the new or expanded discharge will cause an increase in the pollutants relevant to the use for which the water is considered high quality, and if there is an increase, whether that increase constitutes insignificant degradation in the NOI, or in the planned changes report. These NOIs and planned changes reports must be submitted to both EPA and DEQ.

If DEQ determines the new discharge or planned changes of an existing discharger will result in significant degradation, the permittee will need to obtain DEQ's approval of an alternatives analysis (IDAPA 58.01.02.052.08.c), a socioeconomic justification (IDAPA 58.01.02.052.08.d) and information regarding other source controls (IDAPA 59.01.02.052.08.b).

9.10.3.2 ***Follow-up Monitoring for Benchmark Concentrations***. If ***all*** four quarterly samples do not exceed the benchmark, the permittee is not required to conduct any additional quarterly monitoring for that parameter. If ***any*** of the four quarterly

samples exceed the benchmark, then the permittee must follow the additional requirements in Section 6.2.1.2 of the MSGP, with the following modifications:

- If the permittee elects to make any necessary modifications and continue quarterly monitoring, such monitoring must occur until the results from *all four consecutive quarterly samples are below the benchmark*.

9.10.3.3 ***Monitoring of Discharges to Impaired Waters***. To determine the support status of the affected water body, persons filing a Notice of Intent (NOI) for coverage under this general permit must use the most current EPA Integrated Report, available on Idaho DEQ's website: http://www.deq.idaho.gov/water-quality/surface-water/monitoring-assessment/integrated-report/. DEQ's webpage also has a link to the state's map-based Integrated Report which presents information from the Integrated Report in a searchable, map-based format: http://www.deq.idaho.gov/assistance-resources/maps-data For water bodies included on the states 303(d) list (Category 5 of the Integrated Report), identified as "cause unknown", the permittee must monitor for the pollutants listed in the cause comments section of the report (e.g., nutrients, metals, pesticides).

9.10.3.4 ***Stormwater Pollution Prevention Plan (SWPPP) Availability***. If requested by Idaho Department of Environmental Quality (DEQ), the permittee must submit a copy of the SWPPP to DEQ within fourteen (14) days of the request.

9.10.3.5 ***Submission of NOIs, Monitoring Data, and Additional Reporting***. Copies of the following information must be sent to the appropriate DEQ regional office at the same time it is submitted to EPA:

- NOIs and NOTs;
- Monitoring data collected pursuant to Part 6 of the MSGP, well as any additional monitoring data required by this Part;
- Exceedance Reports as required by Part 6.3;
- Planned Changes Reports

Both monitoring data and exceedance reports must be sent to the appropriate DEQ regional office with thirty (30) days of receipt of analytical results. DEQ Regional Office contact information is listed in Table 9.10.3.5.1.

Table 9.10.3.5.1: Idaho Regional Office contact information

Regional Office	Address	Phone	Email
Boise	1445 N. Orchard Rd, Boise 83706	208-373-0550	kati.carberry@deq.idaho.gov lance.holloway@deq.idaho.gov
Coeur d'Alene	2110 Ironwood Parkway, Coeur d'Alene 83814	208-769-1422	june.berquist@deq.idaho.gov
Idaho Falls	900 N. Skyline, Ste B, Idaho Falls 83402	208-528-2650	troy.saffle@deq.idaho.gov
Lewiston	1118 "F" St., Lewiston 83501	208-799-4370	cynthia.barrett@deq.idaho.gov
Pocatello	444 Hospital Way, Pocatello 83201	208-236-6160	lynn.vanevery@deq.idaho.gov greg.mladenka@deq.idaho.gov
Twin Falls	650 Addison Ave., W., Ste 110, Twin Falls 83301	208-736-2190	balthasar.buhidar@deq.idaho.gov
State Office	1410 N. Hilton Rd., Boise 83706	208-373-0574	nicole.deinarowicz@deq.idaho.gov

9.10.3.6 ***Benchmark Monitoring for Arsenic and Selenium.*** The benchmark values for arsenic and selenium are equal to 0.15 mg/L and 0.005 mg/L, respectively. These values are equivalent to Idaho's chronic water quality criteria. Given that storms are discrete events of relatively short duration, DEQ believes it is more appropriate to use the acute water quality criteria as benchmark values. Therefore, the benchmark value

for arsenic and selenium can be set equal to 0.34 mg/L and 0.02 mg/L, respectively, and still comply with Idaho WQS.

9.10.3.7 Additional Conditions Applicable to Sector L (Landfills, Land Application Sites and Open Dumps). Stormwater entering a landfill must be managed as leachate, including run off from areas that have received daily cover which may have contacted waste material, and thus is not eligible for coverage under the MSGP (See 40 CFR 258.26(a)(2); Municipal Solid Waste Landfill Criteria Technical Manual, EPA 530-R-93-017, 1998). Stormwater from a closed landfill or from areas of the landfill that have received final cover is not leachate, and may be covered under the MSGP.

9.10.3.8 Additional Reporting of Discharges Containing Hazardous Materials or Petroleum Products. Any unauthorized discharges containing hazardous materials or petroleum products must be reported to the Idaho State Communications Center by calling 1-800-632-8000 or 208-846-7610.

Spills must also be reported to the appropriate DEQ Regional Office (Table 9.10.3.5.1). Spills of petroleum products that exceed 25 gallons or that cause a visible sheen on nearby surface waters should be reported to DEQ within 24 hours. Petroleum product spills of less than 25 gallons or spills that do not cause a sheen on nearby surface waters must only be reported to DEQ if clean-up cannot be accomplished within 24 hours (IDAPA 58.01.02.850, 58.01.02.851, 58.01.02.852).

9.10.3.9 Numeric Effluent Limitations and Benchmark Monitoring for pH. The MSGP includes a pH range of 6.0 – 9.0 standard units, which does not comply with Idaho WQS (IDAPA 58.01.02.250.01.a). Therefore, numeric effluent limitations and benchmark monitoring concentrations for pH shall be 6.5 – 9.0 standard units.

9.10.3.10 Numeric Effluent Limitations for Total Arsenic and Total Zinc. The MSGP includes a total arsenic effluent limitation (Sector K) of 1.1 mg/L, which exceeds Idaho's acute and chronic criteria of 0.34 mg/L and 0.15 mg/L, respectively. Given that storms are discrete events of relatively short duration, DEQ believes it is more appropriate to use the acute water quality criteria as benchmark values; therefore DEQ requires the total arsenic effluent limit to be set equal to Idaho's acute criterion of 0.34 mg/L.

The MSGP includes a monthly average maximum numeric effluent limit for zinc of 0.296 mg/L (Sector K), which will only comply with water quality standards when hardness is greater than 290 mg/L. Similarly, the maximum daily limit and the monthly average maximum limit for zinc is 0.2 mg/L and 0.11 mg/L, respectively (Sector L); these limits do not generally comply with WQS when hardness values for the receiving water are less than 130 mg/L and 85 mg/L, respectively. Therefore, DEQ requires that the total zinc numeric effluent limit be equal to the acute water quality criterion of 0.12 mg/L.

9.10.4 IDR05I000: Indian country lands within the State of Idaho, except Duck Valley Reservation lands, which are covered under Nevada permit NVR05I000

9.10.4.1 Shoshone-Bannock Tribes

The following conditions apply only to discharges to waters of the Shoshone-Bannock Tribes:

9.10.4.1.1 ***Submission of NOI, Monitoring Data, and Reports.*** Copies of the Notices of Intent (NOI), Monitoring data collected pursuant to section 6.2 of this permit, and Exceedance Reports must be sent to the Shoshone-Bannock Tribes Water Resources Department (SBT-WRD). The monitoring data and exceedance reports must be sent to the SBT-WRD within thirty (30) days of receipt of analytical results.

9.10.4.1.2 ***Submission of SWPPP.*** If requested by the SBT-WRD, the permittee must submit a copy of the SWPPP to SBT-WRD within fourteen (14) days of the request.

9.10.4.1.3 ***Where to Submit Information***. All required or requested documents shall be sent to:

Shoshone-Bannock Tribes Water Resources Department
P.O. Box 306 Pima Drive
Fort Hall, ID 83203
Phone: (208) 239-4582
Fax: (208) 239-4592

9.10.5 ORR05I000: Indian country lands within the State of Oregon, except Fort McDermitt Reservation lands, which are covered under Nevada permit NVR05I000

9.10.5.1 Confederated Tribes of the Umatilla Indian Reservation

Projects located within the exterior boundaries of the Umatilla Indian Reservation must meet the following conditions:

9.10.5.1.1 ***Water Quality Standards.*** The operator shall be responsible for achieving compliance with Confederated Tribes of the Umatilla Indian Reservation's (CTUIR) Water Quality Standards.

9.10.5.1.2 ***Submission of NOI.*** The operator shall submit a copy of the Notice of Intent (NOI to be covered by this permit to the CTUIR Water Resources Program at the address below, at the same time it is submitted to EPA.

9.10.5.1.3 ***Submission of SWPPP.*** The operator shall be responsible for submitting all Stormwater Pollution Prevention Plans (SWPPPs) required under this general permit to the CTUIR Water Resources Program for review and determination that the SWPPP is sufficient to meet Tribal Water Quality Standards, prior to the beginning of any discharge activities taking place.

9.10.5.1.4 ***Additional Reporting.*** The operator shall be responsible for reporting an exceedance to Tribal Water Quality Standards to the CTUIR Water Resources Program at the same time it is reported to EPA.

9.10.5.1.5 ***Additional Requirements for Historic Properties Preservation.*** The applicant shall submit copies of each NOI to the CTUIR Tribal Historic Preservation Office (THPO). The NOI shall define the undertaking's area of potential effect (APE). This information will be used to determine whether or not the undertaking has the potential to affect historic properties. To be in compliance with the NHPA and be eligible for coverage under this permit, the operator must meet the following criteria:

- The THPO will be provided 30 days to comment on the APE as defined in the permit application.

- If the project is an undertaking, a cultural resource investigation must occur. All fieldwork must be conducted by qualified personnel (as outlined by the Secretary of Interior's Standards and Guidelines) and documented using Oregon Reporting Standards. The resulting report must be submitted to the THPO and the THPO must concur with the findings and recommendations before any ground disturbing work can occur. The THPO requires 30 days to review all reports.
- The operator must obtain THPO concurrence in writing. If historic properties are present, this written concurrence will outline measures to be taken to prevent or mitigate effects to historic properties.

9.10.5.1.6 Where to Submit Information. The NOI, SWPPP, and reports must be sent to:

Confederated Tribes of the Umatilla Indian Reservation
Water Resources Program
46411 Timine Way
Pendleton, OR 97801
(541) 966-2420

All required Historic Properties Preservation information must be sent to:

Confederated Tribes of the Umatilla Indian Reservation
Cultural Resources Protection Program
Tribal Historic Preservation Office
46411 Timine Way
Pendleton, OR 97801
(541) 429-7234

9.10.5.2 Confederated Tribes of the Warm Springs Indian Reservation

The following conditions apply for projects within the exterior boundaries of the Warm Springs Indian Reservation:

9.10.5.2.1 Water Quality Standards. The operator shall be responsible for achieving compliance with the Confederated Tribes of the Warm Springs Indian Reservation's Water Quality Standards. (Tribal Ordinance 80).

9.10.5.2.2 Submission of NOI. The operator shall submit a copy of the Notice of Intent (NOI) to be covered by this permit to the Tribes' Environmental Office at the address below, at the same time it is submitted to EPA.

9.10.5.2.3 Submission of SWPPP. The operator shall be responsible for filing all Stormwater Pollution Prevention Plans (SWPPP) required under this permit to the Tribes' Environmental Office for review and determination that the SWPPP is sufficient to meet Tribal Water Quality Standards, prior to the beginning of any discharge activities taking place.

9.10.5.2.4 Additional Reporting. The operator shall be responsible for reporting an exceedance to Tribal Water Quality Standards to the Tribes' Environmental Office at the same time it is reported to EPA.

9.10.5.2.5 Tribal Cultural Resources. The applicant shall submit copies of each NOI to the Tribal Historic Preservation Office (THPO). The NOI shall define the undertaking's area of potential effect (APE). This information will be used to determine whether or not the

undertaking has the potential to affect historic properties. To be in compliance with the NHPA and be eligible for coverage under this permit, the operator must meet the following criteria:

- The THPO will be provided 30 days to comment on the APE as defined in the permit application.
- If the project is an undertaking, a cultural resource investigation must occur. All fieldwork must be conducted by qualified personnel (as outlined by the Secretary of Interior's Standards and Guidelines). The resulting report must be submitted to the THPO and the THPO must concur with the findings and recommendations before any ground disturbing work can occur. The THPO requires 30 days to review all reports.
- The operator must obtain THPO concurrence in writing. If historic properties are present, this written concurrence will outline measures to be taken to prevent or resolve effects to historic properties.

9.10.5.2.6 ***Where to Submit Information.*** All required or requested documents shall be sent to:

Confederated Tribes of Warm Springs
Branch of Natural Resources
Tribal Environmental Office
P.O. Box C
Warm Springs
Oregon, 97761
541-553-2002

9.10.6 WAR05I000: Indian country lands within the State of Washington

9.10.6.1 Confederated Tribes of the Colville Reservation

No Additional Requirements.

9.10.6.2 Lummi Nation

The following conditions apply only to discharges within the Lummi Nation:

9.10.6.2.1 ***Certification.*** This certification does not exempt and is provisional upon compliance with other applicable statutes and codes administered by federal and Lummi tribal agencies. Pursuant to Lummi Code of Laws (LCL) 17.05.020(a), the operator must also obtain a land use permit from the Lummi Planning Department as provided in Title 15 of the Lummi Code of Laws and regulations adopted thereunder.

9.10.6.2.2 ***Submission of SWPPP.*** Pursuant to LCL 17.05.020, each operator shall develop and submit a Storm Water Pollution Prevention Plan to the Lummi Water Resources Division for review and approval by the Water Resources Manager prior to beginning any discharge activities.

9.10.6.2.3 ***Water Quality Standards.*** Pursuant to LCL Title 17, each operator shall be responsible for achieving compliance with the Water Quality Standards for Surface Waters of the Lummi Indian Reservation (Lummi Administrative Regulations [LAR] 17 LAR 07.010 through 17 LAR 07.210).

9.10.6.2.4 ***Submission of NOI, Monitoring Data, Reports and NOT.*** Each operator shall submit a copy of the Notice of Intent (NOI), analytical monitoring results, any Exceedance Reports, Annual Reports, and Notice of Termination (NOT) to the Lummi Water

Resources Division at the same time it is submitted to the Environmental Protection Agency (EPA).

9.10.6.2.5 ***Where to Submit Information.*** All required or requested documents shall be sent to:

Lummi Natural Resources Department
ATTN: Water Resources Manager
2665 Kwina Road
Bellingham, WA 98226

Please see the Lummi Nation website (www.lummi-nsn.gov) to review a copy of Title 17 of the Lummi Code of Laws and the references upon which the conditions identified above are based.

9.10.6.3 ***Puyallup Tribe of Indians***

The following conditions apply only to discharges to waters of the Puyallup Tribe of Indians:

9.10.6.3.1 ***Submission of NOI, NOT and No Exposure.*** Copies of the Notice of Intent (NOI), Notice of Termination (NOT), and No Exposure Certification shall be submitted to the Tribe's Natural Resources Department.

9.10.6.3.2 ***Submission of SWPPP.*** A copy of the Stormwater Pollution Plan (SWPPP) shall be submitted to the Tribe's Natural Resources Department at least thirty (30) days in advance of submitting the NOI to EPA.

9.10.6.3.3 ***Compliance with Tribe's Water Quality Standards.*** Each permittee shall be responsible for achieving compliance with the Tribe's Water Quality Standards, including anti-degradation provisions.

9.10.6.3.4 ***Submission and Approval of Sampling Plan.*** A sampling plan shall be submitted to the Tribe's Natural Resources Department and approved by the Tribe prior to initiation of monitoring required under Part 6 of this permit.

9.10.6.3.5 ***Submission of Monitoring Data and Reports.*** The results of any monitoring required by this permit and reports must be sent to the Tribe's Natural Resources Department, including a description of the corrective actions required and undertaken to meet effluent limits or benchmarks (as applicable).

9.10.6.3.6 ***Authorization to Inspect.*** The Natural Resources Department may conduct an inspection of any facility covered by this permit to ensure compliance with tribal water quality standards. The Department may enforce its certification conditions.

9.10.6.3.7 ***Tribal Endangered Species Act Consultation.*** Consultation with the Tribe that addresses the effects of your facility's stormwater discharges, allowable non-stormwater discharges, and stormwater discharge-related activities on federally-listed threatened or endangered species and designated critical habitat. Information required as part of the consultation shall include:

- Basis of the determination that your stormwater discharges, allowable non-stormwater discharges, and stormwater discharge-related activities will not adversely affect federally-listed as endangered or threatened ("listed") under the Endangered Species Act (ESA) and will not result in the adverse

modification or destruction of designated critical habitat including appropriate measures to be undertaken to avoid or eliminate the likelihood of adverse effects (under Criterion C in Section 1.1.4.5); and

- Notice of Intent form complete with extent of action area, list of federally-listed threatened or endangered species or designated critical habitat likely to occur in action area, list of potential pollutants (if you are a new discharger) or list of pollutants for which you have ever exceeded an applicable benchmark of effluent limitation guideline, or for which your discharge has ever been found to cause or contribute to an exceedance of an applicable water quality standard (if you are an existing discharger).

9.10.6.3.8 ***Discharges to CERCLA Sites.*** This permit does not authorize direct stormwater discharges to certain sites undergoing remedial cleanup actions pursuant to the Comprehensive Environmental Response, Compensation and Liability Act (CERCLA) unless first approved by the appropriate EPA Regional office. In the case of the Commencement Bay, Near Shore/Tide Flats (WAD980726368), the Puyallup Tribe also requests notification by the facility and consultation with EPA prior to discharge. Contaminants at this site include but are not limited to: dioxins, furans, arsenic, copper, lead, zinc, 4-methly-phenol, Hex-CB, HPAHs, PCBs, PCE, cadmium, mercury, and LPAHs.

9.10.6.3.9 ***Discharge-related Activities that have Potential to Cause an Adverse Effect on Historic Properties.*** Installation of stormwater controls that involve subsurface disturbances may potentially have an adverse impact on historic properties. Procedures detailed in Appendix F of the permit shall be completed. Brandon Reynon, the Puyallup Tribe's Cultural Regulatory Specialist, shall be contacted prior to initiating discharge-related activities that may have an impact on historic properties. His contact information is (253) 573-7986 and Brandon.reynon@puyalluptribe.com

9.10.6.3.10 ***Where to Submit Information.*** All required or requested documents shall be sent to the:

Puyallup Tribe of Indians
Department of Natural Resources c/o Bill Sullivan and Char Naylor
3009 E. Portland Avenue
Tacoma, Washington 98404

9.10.6.4 ***Spokane Tribe of Indians***

Permit coverage not available until Clean Water Act (CWA) 401 certification is received.

9.10.6.5 ***Swinomish Indian Tribal Community***

The following conditions apply only to discharges to waters of the Swinomish Indian Tribal Community:

9.10.6.5.1 ***Certification.*** This certification does not exempt and is provisional upon compliance with other applicable statutes and codes administered by federal and Swinomish Indian Tribal Community (SITC) agencies. Operator must obtain any applicable SITC permits.

9.10.6.5.2 ***Submission of SWPPP.*** Each operator shall develop a Storm Water Pollution Prevention Plan (SWPPP) and submit it to the Swinomish Department of Environmental Protection (SDEP) for review and approval by the Director prior to beginning any discharge activities under the permit.

9.10.6.5.3 ***Water Quality Standards.*** Each operator shall be responsible for achieving compliance with applicable Water Quality Standards for Surface Waters of the Swinomish Indian Reservation.

9.10.6.5.4 ***Submission of NOI, Monitoring Data, Reports and NOT.*** Each operator shall submit a copy of the Notice of Intent (NOI), analytical monitoring results and Exceedance Reports if any, Annual Reports, and Notice of Termination (NOT) to the Swinomish DEP at the same time it is submitted to EPA.

9.10.6.5.5 ***Alternative Permit.*** The permit does not allow discharge of any pollutant on EPA's Persistent Bioaccumulative and Toxic pollutant list. Operator must eliminate such discharge or apply for an Individual permit.

9.10.6.5.6 ***Historic Properties Preservation.*** If any archeological/cultural resources or human remains are uncovered during the course of operations, all work will cease and operator must contact the Swinomish Tribal Historic Preservation Officer at 466-7352 or (cell) 840-4127.

9.10.6.5.7 ***Where to Submit Information.*** All submittals and correspondence required by this certification including but not limited to Storm Water Pollution Prevention Plans (SWPPP), monitoring results, reports of exceedances, and other notices are to be directed to the Environmental Director, Swinomish Department of Environmental Protection, 11430 Moorage Way, LaConner, WA 98257, phone (360) 466-7201, fax (360) 466-1615, and shall reference 401 Certification # 2014-01 and NPDES MSGP WAR-5I000.

9.10.6.6 ***Tulalip Tribes***

The following conditions apply only to discharges on waters of the Tulalip Tribes:

9.10.6.6.1 ***Submission of NOI, NOT, and No Exposure.*** Copies of the Notice of Intent (NOI), Notice of Termination (NOT), and No Exposure Certification shall be submitted to the Tribe's Natural Resources Department.

9.10.6.6.2 ***Submission of SWPPP.*** A copy of the Stormwater Pollution Prevention Plan (SWPPP) shall be submitted to the Tribe's Natural Resources Department at least thirty (30) days in advance of submitting the NOI to EPA.

9.10.6.6.3 ***Compliance with Tribe's Water Quality Standards.*** Each permittee shall be responsible for achieving compliance with the Tribe's Water Quality Standards.

9.10.6.6.4 ***Submission and approval of Sampling Plans.*** A sampling plan shall be submitted to the Tribe's Natural Resources Department and approved by the Tribe prior to initiation of monitoring required under Part 6 of this permit.

9.10.6.6.5 ***Submission of Monitoring Data and Reports.*** The results of any monitoring required by this permit and reports must be sent to the Tribe's Natural Resources Department,

including a description of the corrective actions required and undertaken to meet effluent limits or benchmarks (as applicable).

9.10.6.6.6 ***Authorization to Inspect.*** The Natural Resources Department may conduct an inspection of any facility covered by this permit to ensure compliance with tribal water quality standards. The Department may enforce its certification conditions.

9.10.6.6.7 ***Incorporation by reference.*** This certification does not exempt the applicant from compliance with other statues and codes administered by the tribes, county, state and federal agencies.

9.10.6.6.8 ***Invalidation.*** This certification will cease to be valid if the project is constructed and/or operated in a manner not consistent with the project description contained in the permit. This certification will also cease to be valid and the applicant must reapply with an updated application if information contained in the permit is voided by subsequent submittals.

9.10.6.6.9 ***Modification.*** Nothing in this certification waives the Tulalip Tribes of Washington's authority to issue modifications to this certification if additional impacts due to operational changes are identified, or if additional conditions are necessary to protect water quality or further protect the Tribal Communities interest.

9.10.6.6.10 ***Permits on-site.*** A copy of the permit shall be kept on the job site and readily available for reference by the construction supervisor, construction managers and foreman, and Tribal inspectors.

9.10.6.6.11 ***Project Management.*** The applicant shall ensure that project managers, construction managers and foreman, and other responsible parties have read and understand conditions of the permit, this certification, and other relevant documents, to avoid violations or noncompliance with this certification.

9.10.6.6.12 ***Emergencies/Contingency Measures.*** In the event the operator is unable to comply with the permit terms and conditions due to any cause, the contractor shall immediately take action to stop the violation and correct the problem, and immediately report spill events to EPA's 24-hour Spill Response Team at (206) 553-1263 and the Tulalip Tribes Police Department (425) 508-1565. Compliance with this condition does not relieve the applicant from responsibility to maintain continuous compliance with the terms and conditions of this certification or the resulting liability from failure to comply.

9.10.6.6.13 ***Tribal Endangered Species Act Consultation.*** Consultation with the Tribes that addresses the effects of a facility's stormwater discharges, allowable non-stormwater discharges, and stormwater discharge-related activities on federally-listed threatened or endangered species and designated critical habitat. Information required as part of the consultation shall include:

- Basis of the determination that your stormwater discharges, allowable non-stormwater discharges, and stormwater discharge-related activities will not adversely affect federally-listed as endangered or threatened ("listed") under the Endangered Species Act (ESA) and will not result in the adverse modification or destruction of designated critical habitat including appropriate measures to be undertaken to avoid or eliminate the likelihood of adverse effects (under Criterion C in Section 1.1.4.5); and

- Notice of Intent form complete with extent of action area, list of federally-listed threatened or endangered species or designated critical habitat likely to occur in action area, list of potential pollutants (if you are a new discharger) or list of pollutants for which you have ever exceeded an applicable benchmark or effluent limitations guideline, or for which your discharge has ever been found to cause or contribute to an exceedance of an applicable water quality standard (if you are an existing discharger).

9.10.6.6.14 Discharges to CERCLA Sites. This permit does not authorize direct stormwater discharges to certain sites undergoing remedial cleanup actions pursuant to the Comprehensive Environmental Response, Compensation and Liability Act (CERCLA) unless first approved by the appropriate EPA Regional office. In the case of the Tulalip Landfill site (WAD980639256), the Tulalip Tribes also requests notification by the facility and consultation with EPA prior to discharge. Contaminants at this site may include but are not limited to: dioxins, furans, arsenic, copper, lead, zinc, 4-methyl-phenol, Hex-CB, HPAHs, PCBs, PCE, cadmium, mercury, and LPAHs.

9.10.6.6.15 Discharge-related Activities that have Potential to Cause an Adverse Effect on Historic Properties. Installation of stormwater controls that involve subsurface disturbances may potentially have an adverse impact on historic properties. Procedures detailed in Appendix F of the permit shall be completed. Richard Young, of the Tulalip Tribe's Cultural Resources Department shall be contacted prior to initiating discharge-related activities that may have an impact on historic properties. His contact information is (360) 716-2652 and ryoung@tulaliptribesnsn.gov.

9.10.6.6.16 Where to Submit Information: All required or requested documents shall be sent to the:

Tulalip Tribes Natural Resources Environmental Division
c/o Kurt Nelson and Valerie Streeter
6704 Marine Drive, Tulalip, Washington 98271

9.10.7 WAR05F000: Areas in the State of Washington, except those located on Indian Country lands, subject to industrial activity by a Federal Operator

Permittees in the State of Washington must meet the following conditions:

9.10.7.1 Discharges shall not cause or contribute to a violation of surface water quality standards (Chapter 173-201A WAC), ground water quality standards (Chapter 173-200 WAC), sediment management standards (Chapter 173-204 WAC), and human health-based criteria in the National Toxics Rule (40 CFR Part 131.36). Discharges that are not in compliance with these standards are not authorized.

9.10.7.2 Prior to the discharge of stormwater and non-stormwater to waters of the state, the Permittee shall apply all known, available, and reasonable methods of prevention, control, and treatment (AKART). This includes the preparation and implementation of an adequate Stormwater Pollution Prevention Plan (SWPPP), with all appropriate best management practices (BMPs) installed and maintained in accordance with the SWPPP and the terms and conditions of this permit.

9.10.7.3 Additional Sampling Requirements and Effluent Limits for Discharges to Certain Impaired Waters and Puget Sound Sediment Cleanup Sites.

1. Permittees discharging to a 303(d)-listed waterbody (Category 5), either directly or indirectly through a stormwater drainage system, shall comply with the applicable sampling requirements and numeric effluent limits in Table 9.10.7.3.1.

   For purposes of this condition, "applicable sampling requirements and effluent limits" means the sampling and effluent limits in Table 1 that correspond to the specific parameter(s) the receiving water is 303(d)-listed for at the time of permit coverage, or Total Suspended Solids (TSS) if the waterbody is 303(d)-listed (Category 5) for sediment quality at the time of MSGP coverage.

   If a discharge point is subject to an impaired waterbody effluent limit for a parameter that also has a benchmark, the effluent limit supersedes the benchmark. All references to Category 5 pertain to the 2012 EPA-approved Water Quality Assessment.

   The 2012 EPA-approved Water Quality Assessment may be viewed online at: http://www.ecy.wa.gov/programs/wq/links/wq_assessments.html.

Table 9.10.7.3.1: Sampling and Effluent Limits Applicable to Discharges to 303(d)-listed Waters

Parameter	Units	Maximum Daily[a]		Analytical Method[b]	Laboratory Quantitation Level[c]	Sampling Frequency[d]
		Freshwater	Marine			
Turbidity	NTUs	25	25	EPA 180.1 Meter	0.5	1/quarter
pH	SU	j	Between 7.0 and 8.5	Meter	±0.1	1/quarter
Fecal Coliform Bacteria	# colonies/ 100 mL	i	i	SM 9222D	20 CFU/ 100 mL	1/quarter
TSS[f]	mg/L	30	30	SM2540-D	5	1/quarter
Phosphorus, Total	mg/L	g	g	EPA 365.1	0.01	1/quarter
Total Ammonia (as N)	mg/L	g	g	SM 4500 NH^3-GH	0.3	1/quarter
Copper, Total	µg/L	g	g	EPA 200.8	2.0	1/quarter
Lead, Total	µg/L	g	g	EPA 200.8	0.5	1/quarter
Mercury, Total	µg/L	2.1	1.8	EPA1631E	0.0005	1/quarter
Zinc, Total	µg/L	g	g	EPA 200.8	2.5	1/quarter
Pentachlorophenol	µg/L	9[h]	g	EPA 625	1.0	1/quarter

a. Maximum daily effluent limit means the highest allowable daily discharge. The daily discharge means the discharge of a pollutant measured during a calendar day. The daily discharge is the average measurement of the pollutant over the day; this does not apply to pH.

b. Or other equivalent method with the same reporting level.

c. The Permittee shall ensure laboratory results comply with the quantitation level (QL) specified in the table. However, if an alternate method from 40 CFR Part 136 is sufficient to produce measurable results in the sample, the Permittee may use that method for analysis. If the Permittee uses an alternative method it must report the test method and QL on the DMR. If the Permittee is unable to obtain the required QL due to matrix effects, the Permittee must report the matrix-specific method detection level (MDL) and QL on the DMR.

d. 1/quarter means at least one sample taken each quarter, e.g., Q1 = Jan 1 – March 31, Q2 = April 1 – June 30.

e. Permittees shall use either a calibrated pH meter consistent with EPA 9040 or an approved state method.

f. Permittees who discharge to a waterbody 303(d)-listed (Category 5) for sediment quality shall sample the discharge for TSS.

g. Site-specific effluent limitation will be assigned at the time of permit coverage.

h. Based on a pH of 7.0.

i. A numeric effluent limit does not apply, but Permittees must sample according to Table 9.10.7.3.1. In addition, the following mandatory BMPs shall be incorporated into the SWPPP and implemented; the Permittee must:

1) Use all known, available and reasonable methods to prevent rodents, birds, and other animals from feeding/nesting/roosting at the facility. Nothing in this section shall be construed as allowing violations of any applicable federal, state or local statutes, ordinances, or regulations including the Migratory Bird Treaty Act.
2) Perform at least one annual dry weather inspection of the stormwater system to identify and eliminate sanitary sewer cross-connections.
3) Install structural source control BMPs to address on-site activities and sources that could cause bacterial contamination (e.g., dumpsters, compost piles, food waste, and animal products).
4) Implement operational source control BMPs to prevent bacterial contamination from any known sources of fecal coliform bacteria (e.g., animal waste).
5) Conduct additional bacteria-related sampling and/or BMPs, if ordered by Ecology on a case-by-case basis.

j. The effluent limit for a Permittee who discharges to a freshwater body 303(d)-listed for pH is: Between 6.0 and 8.5, if the 303(d)-listing is for high pH only; Between 6.5 and 9.0, if the 303(d)-listing is for low pH only; and Between 6.5 and 8.5 if the 303(d)-listing is for both low and high pH. All pH effluent limits are applied end-of-pipe.

2. Permittees discharging to a Puget Sound Sediment Cleanup Site[1], either directly or indirectly through a stormwater drainage system, shall comply with this section:

   a. Permittees shall sample the discharge for Total Suspended Solids (TSS) in accordance with Table 9.10.7.3.2.

   b. If the waterbody is listed within Category 5 (sediment medium) where the outfall discharges to the waterbody, the discharge is subject to the TSS numeric effluent limit in Table 9.10.7.3.1.

   c. If the waterbody is not listed within Category 5 (sediment medium) where the outfall discharges to the waterbody (e.g., Category 4B, etc.), the discharge is subject to the TSS benchmark in Table 9.10.7.3.2. If the discharge is subject to more than one TSS benchmark value (i.e., two different benchmarks), the lower benchmark supersedes the higher one. If a discharge exceeds the TSS benchmark, the Permittee shall implement corrective actions in accordance with the MSGP.

   d. Permittees shall remove accumulated solids from storm drain lines (including inlets, catch basins, sumps, conveyance lines, and oil/water separators) owned or controlled by the Permittee at least once during the term of the MSGP.

      Permittees shall conduct line cleaning operations (e.g., jetting, vacuuming, removal, loading, storage, and/or transport) using BMPs to prevent discharges of storm drain solids to surface waters of the state.

      Removed storm drain solids and liquids shall be disposed of in accordance with applicable laws and regulations and documented in the SWPPP.

[1] Puget Sound Sediment Cleanup Site means: Category 4B (Sediment) portions of Budd Inlet (Inner), Commencement Bay (Inner), Commencement Bay (Outer), Dalco Passage and East Passage, Duwamish Waterway (including East and West Waterway), Eagle Harbor, Elliot Bay, Hood Canal (North), Liberty Bay, Rosario Strait, Sinclair Inlet, and Thea Foss Waterway; Category 5 (Sediment) portions of the Duwamish Waterway (including East and West Waterway), and Port Gardner and Inner Everett Harbor; and the Port Angeles Harbor sediment cleanup area, as mapped on Ecology's ISGP website. All references to Category 4B and 5 pertain to the 2012 EPA-approved Water Quality Assessment, available online at: http://www.ecy.wa.gov/programs/wq/links/wq_assessments.html

e. Prior to removing storm drain solids according to Condition 2.D, Permittees shall sample and analyze storm drain solids in accordance with Table 9.10.7.3.3. Storm drain solids must be collected/sampled from a representative catch basin, sump, pipe, or other feature within the storm drain system that corresponds to the discharge point where Total Suspended Solids (TSS) samples are collected per these conditions. Samples may be either a single grab sample or a composite sample. Samples must be representative of the storm drain solids generated and accumulated in the facility's drainage system. To the extent possible, sample locations must exclude portions of the drainage system affected by water from off-site sources (e.g., run-on from off-site properties, tidal influence, and backflow).

f. All storm drain solids sampling data shall be reported to EPA no later than the DMR due date for the reporting period in which the solids were sampled. A copy of the lab report shall be submitted to EPA.

Table 9.10.7.3.2: Benchmarks and Sampling Requirements Applicable to Discharges to Puget Sound Sediment Cleanup Sites that are not Category 5 for Sediment Quality

Parameter	Units	Benchmark Value[a]	Analytical Method	Laboratory Quantitation Level[b]	Minimum Sampling Frequency[c]
TSS	mg/L	30	SM2540-D	5	1/quarter

a. Permittees sampling more than once per quarter shall average the sample results and compare the average value to the benchmark to determine if it the discharge has exceeded the benchmark value. However, if Permittees collect more than one sample during a 24-hour period, they must first calculate the daily average of the individual grab sample results collected during that 24-hour period; then use the daily average to calculate a quarterly average.

b. The Permittee shall ensure laboratory results comply with the quantitation level (QL) specified in the table. However, if an alternate method from 40 CFR Part 136 is sufficient to produce measurable results in the sample, the Permittee may use that method for analysis. If the Permittee uses an alternative method it must report the test method and QL on the DMR. If the Permittee is unable to obtain the required QL due to matrix effects, the Permittee must report the matrix-specific method detection level (MDL) and QL on the DMR.

c. 1/quarter means at least one sample taken each quarter, year-round.

Table 9.10.7.3.3: Sampling and Analytical Procedures for Storm Drain Solids

Analyte	Method in Sediment	Quantitation Level[a]
Conventional Parameters		
Percent total solids	SM 2540G, or ASTM Method D 2216	NA
Total organic carbon	Puget Sound Estuary Protocols (PSEP 1997), or EPA 9060	0.1%
Grain size	Ecology Method Sieve and Pipette (ASTM 1997), ASTMD422, or PSEP 1986/2003	NA
Metals		
Antimony, Total	EPA Method 200.8 (ICP/MS) , EPA Method 6010 or EPA Method 6020	0.2 mg/kg dw[b]
Arsenic, Total	EPA Method 200.8 (ICP/MS) , EPA Method 6010 or EPA Method 6020	0.1 mg/kg dw
Beryllium, Total	EPA Method 200.8 (ICP/MS) , EPA Method 6010 or EPA Method 6020	0.2 mg/kg dw
Cadmium, Total	EPA Method 200.8 (ICP/MS) , EPA Method 6010 or EPA Method 6020	0.2 mg/kg dw
Chromium, Total	EPA Method 200.8 (ICP/MS) , EPA Method 6010 or EPA Method 6020	0.5 mg/kg dw

Analyte	Method in Sediment	Quantitation Level[a]
Copper, Total	EPA Method 200.8 (ICP/MS) , EPA Method 6010 or EPA Method 6020	0.2 mg/kg dw
Lead, Total	EPA Method 200.8 (ICP/MS) , EPA Method 6010 or EPA Method 6020	0.2 mg/kg dw
Mercury, Total	EPA Method 1631E, or EPA Method 7471B	0.005 mg/kg dw
Nickel, Total	EPA Method 200.8 (ICP/MS) , EPA Method 6010 or EPA Method 6020	0.1 mg/kg dw
Selenium, Total	EPA Method 200.8 (ICP/MS) , EPA Method 6010 or EPA Method 6020	0.5 mg/kg dw
Silver, Total	EPA Method 200.8 (ICP/MS) , EPA Method 6010 or EPA Method 6020	0.1 mg/kg dw
Thallium, Total	EPA Method 200.8 (ICP/MS) , EPA Method 6010 or EPA Method 6020	0.2 mg/kg dw
Zinc, Total	EPA Method 200.8 (ICP/MS) , EPA Method 6010 or EPA Method 6020	5.0 mg/kg dw
Organics		
PAH compounds[c]	EPA Method 8270 D	70 µg/kg dw
PCBs (aroclors), Total[d]	EPA Method 8082	10 µg/kg dw
Petroleum Hydrocarbons		
NWTPH-Dx	NWTPH-Dx	25.0-100.0 mg/kg dw

a. The Permittee shall ensure laboratory results comply with the quantitation level (QL) specified in the table. However, if an alternate method is sufficient to produce measurable results in the sample, the Permittee may use that method for analysis. If the Permittee uses an alternative method, it must report the test method and QL on the sediment monitoring report. All results shall be reported. For values below the QL, or where a QL is not specified, report results at the method detection level (MDL) from the lab and the qualifier of "U" for undetected at that concentration. If the Permittee is unable to obtain the required QL due to matrix effects, the Permittee must report the matrix-specific MDL and QL on the DMR.

b. dw = dry weight.

c. PAH compounds include: 1-methylnaphthalene, 2-methylnaphthalene, 2-chloronaphthalene, acenaphthylene, acenaphthene, anthracene, benzo(a)anthracene, benzo(a)pyrene, benzo(b, k)fluoranthene, benzo(ghi)perylene, dibenzo(a,h)anthracene, dibenzofuran, carbazole, chrysene, fluoranthene, fluorene, indeno(1,2,3-cd)pyrene, naphthalene, phenanthrene, and pyrene.

d. Total = sum of PCB aroclors 1016+1221+1232+1242+1248+1254+1260.

9.10.7.4 Requirements for Discharges to Waters with Applicable TMDLs

1. The Permittee shall comply with applicable TMDL determinations. Applicable TMDLs or TMDL determinations are TMDLs which have been completed by the issuance date of this permit, or which have been completed prior to the date that the Permittee's NOI is received by EPA, whichever is later. EPA will list the Permittee's requirements to comply with this condition on the letter of permit coverage.
2. TMDL requirements associated with TMDLs completed after the issuance date of this permit only become effective if they are imposed through an administrative order issued by EPA.
3. Where Ecology has established a TMDL wasteload allocation and sampling requirements for the Permittee's discharge, the Permittee shall comply with all requirements of the TMDL.
    a. If a discharge point is subject to a TMDL-related effluent limit for a parameter that also has a benchmark, the effluent limit supersedes the benchmark.

4. Where Ecology has established a TMDL general wasteload allocation for industrial stormwater discharges for a parameter present in the Permittee's discharge, but has not identified specific requirements, EPA will assume the Permittee's compliance with the terms and conditions of the permit complies with the approved TMDL.
5. Where Ecology has not established a TMDL wasteload allocation for industrial stormwater discharges for a parameter present in the Permittee's discharge, but has not excluded these discharges, EPA will assume the Permittee's compliance with the terms and conditions of this permit complies with the approved TMDL.
6. Where a TMDL for a parameter present in the Permittee's discharge specifically precludes or prohibits discharges of stormwater associated with industrial activity, the Permittee is not eligible for coverage under the MSGP.

Appendix A - Definitions, Abbreviations, and Acronyms (for the purposes of this permit).

A.1. DEFINITIONS

Action Area – all areas to be affected directly or indirectly by the federal action and not merely the immediate area involved in the action. See 50 CFR 402. For the purposes of this permit and for application of Endangered Species Act requirements, the following areas are included in the definition of action area:

- The areas where stormwater discharges originate and flow from the industrial facility to the point of discharge into receiving waters. (Example: Where stormwater flows into a ditch, swale, or gully that leads to receiving waters and where listed species (such as listed amphibians) are found in the ditch, swale, or gully.)
- The areas where stormwater from industrial activities discharge into receiving waters and the areas in the immediate vicinity of the point of discharge. (Example: Where stormwater from industrial activities discharges into a stream segment that is known to harbor listed aquatic species.)
- The areas where stormwater controls will be constructed and operated, including any areas where stormwater flows to and from the stormwater controls. (Example: Where a stormwater retention pond would be built.)
- The areas upstream and/or downstream from the stormwater discharge into a stream segment that may be affected by these discharges. (Example: Where sediment discharged to a receiving stream settles downstream and impacts a breeding area of a listed aquatic species.)

Antidegradation Policy or Antidegradation Requirements – the water quality standards regulation that requires States and Tribes to establish a three-tiered antidegradation program:

1. Tier 1 maintains and protects existing uses and water quality conditions necessary to support such uses. An existing use can be established by demonstrating that fishing, swimming, or other uses have actually occurred since November 28, 1975, or that the water quality is suitable to allow such uses to occur. Where an existing use is established, it must be protected even if it is not listed in the water quality standards as a designated use. Tier 1 requirements are applicable to all surface waters.

2. Tier 2 maintains and protects "high quality" waters -- water bodies where existing conditions are better than necessary to support CWA § 101(a)(2) "fishable/swimmable" uses. Water quality can be lowered in such waters. However, state and tribal Tier 2 programs identify procedures that must be followed and questions that must be answered before a reduction in water quality can be allowed. In no case may water quality be lowered to a level which would interfere with existing or designated uses.

3. Tier 3 maintains and protects water quality in outstanding national resource waters (ONRWs). Except for certain temporary changes, water quality cannot be lowered in such waters. ONRWs generally include the highest quality waters of the United States. However, the ONRW classification also offers special protection for waters of exceptional ecological significance, i.e., those which are important, unique, or sensitive ecologically. Decisions regarding which water bodies qualify to be ONRWs are made by States and authorized Indian Tribes.

Arid Areas – areas where annual rainfall averages from 0 to 10 inches.

Bypass – the intentional diversion of waste streams from any portion of a treatment facility. See 40 CFR 122.41(m)(1)(i).

CERCLA Site (i.e., Superfund Site) - for the purposes of this permit, a site as defined in Section 101(9) of the Comprehensive Environmental Response, Compensation and Liability Act (CERCLA), 42 U.S.C. § 9601(9), that is undergoing a remedial investigation and feasibility study, or for which a Record of Decision for remedial action has been issued in accordance with the National Contingency Plan, 40 CFR Part 300.

Co-located Industrial Activities – any industrial activities, excluding your primary industrial activity(ies), located on-site that are defined by the stormwater regulations at 122.26(b)(14)(i)-(ix) and (xi). An activity at a facility is not considered co-located if the activity, when considered separately, does not meet the description of a category of industrial activity covered by the stormwater regulations or identified by the SIC code list in Appendix D.

Confidential Business Information (CBI) – see 40 CFR Part 2 for relevant definitions of CBI: http://www.gpo.gov/fdsys/pkg/CFR-2013-title40-vol1/pdf/CFR-2013-title40-vol1-part2-subpartB.pdf.

Control Measures – refers to any stormwater control or other method (including narrative effluent limitations) used to prevent or reduce the discharge of pollutants to waters of the United States.

Corrective Action – for the purposes of the permit, any action taken, or required to be taken, to (1) repair, modify, or replace any stormwater control used at the site; (2) clean up and dispose of spills, releases, or other deposits found on the site; and (3) remedy a permit violation.

Critical Habitat – as defined in the Endangered Species Act at 16 U.S.C. 1531 for a threatened or endangered species, (i) the specific areas within the geographical area occupied by the species, at the time it is listed in accordance with the provisions of section 4 of the Endangered Species Act, on which are found those physical or biological features essential to the conservation of the species and which may require special management considerations or protection; and (ii) specific areas outside the geographical area occupied by the species at the time it is listed in accordance with the provisions of section 4 of the Endangered Species Act, upon a determination by the Secretary that such areas are essential for the conservation of the species.

Director – a Regional Administrator of the Environmental Protection Agency or an authorized representative. See 40 CFR 122.2.

Discharge – when used without qualification, means the "discharge of a pollutant." See 40 CFR 122.2.

Discharge of a Pollutant – any addition of any "pollutant" or combination of pollutants to "waters of the United States" from any "point source," or any addition of any pollutant or combination of pollutants to the waters of the "contiguous zone" or the ocean from any point source other than a vessel or other floating craft which is being used as a means of transportation. This includes additions of pollutants into waters of the United States from: surface runoff which is collected or channeled by man; discharges through pipes, sewers, or other conveyances, leading into privately owned treatment works. See 40 CFR 122.2.

Discharge Point – for the purposes of this permit, the location where collected and concentrated stormwater flows are discharged from the facility such that the first receiving waterbody into which the discharge flows, either directly or through a separate storm sewer system, is a water of the U.S.

Discharge-Related Activity – activities that cause, contribute to, or result in stormwater and allowable non-stormwater point source discharges, and measures such as the siting, construction and operation of stormwater controls to control, reduce, or prevent pollution in the discharges.

Discharge to an Impaired Water – for the purposes of this permit, a discharge to an impaired water occurs if the first water of the U.S. to which you discharge is identified by a state, tribe, or EPA as not meeting an applicable water quality standard, and requires development of a total maximum daily load (TMDL) (pursuant to Section 303(d) of the Clean Water Act), or is addressed by an EPA-approved or established TMDL, or is not in either of the above categories but the waterbody is covered by pollution control requirements that meet the requirements of 40 CFR 130.7(b)(1). For discharges that enter a separate storm sewer system prior to discharge, the water of the U.S. to which you discharge is the waterbody that receives the stormwater discharge from the storm sewer system.

Drought-Stricken Area – for the purposes of this permit, an area in which the National Oceanic and Atomospheric Administration's U.S. Seasonal Drought Outlook indicates for the period that any of the following conditions are likely: (1) "Drought to persist or intensify", (2) "Drought ongoing, some improvement", (3) "Drought likely to improve, impacts ease", or (4) "Drought development likely". See http://www.cpc.ncep.noaa.gov/products/expert_assessment/season_drought.gif.

Effective Operating Condition – for the purposes of this permit, a stormwater control is kept in effective operating condition if it has been implemented and maintained in such a manner that it is working as designed to minimize pollutant discharges.

Effluent Limitations – for the purposes of this permit, any of the Part 2 or Part 3 requirements.

Effluent Limitations Guideline (ELG) – defined in 40 CFR § 122.2 as a regulation published by the Administrator under section 304(b) of CWA to adopt or revise effluent limitations.

Eligible – for the purposes of this permit, refers to stormwater and allowable non-stormwater discharges that are authorized for coverage under this general permit.

Endangered Species – defined in the Endangered Species Act at 16 U.S.C. 1531 as any species which is in danger of extinction throughout all or a significant portion of its range other than a species of the Class Insecta determined by the Secretary to constitute a pest whose protection under the provisions of this Act would present an overwhelming and overriding risk to man.

Existing Discharger – an operator applying for coverage under this permit for discharges authorized previously under an NPDES general or individual permit.

Facility or Activity – any NPDES "point source" (including land or appurtenances thereto) that is subject to regulation under the NPDES program. See 40 CFR 122.2.

Feasible – for the purposes of this permit, feasible means technologically possible and economically practicable and achievable in light of best industry practices. EPA notes that it does not intend for any permit requirement to conlict with state water rights law.

Federal Operator – an entity that meets the definition of "Operator" in this permit and is either any department, agency or instrumentality of the executive, legislative, and judicial branches of the Federal government of the United States, or another entity, such as a private contractor, operating for any such department, agency, or instrumentality.

Hazardous Materials or Hazardous Substances or Toxic Materials – for the purposes of this permit, any liquid, solid, or contained gas that contain properties that are dangerous or potentially harmful to human health or the environment. See also 40 CFR §261.2.

Historic Property – as defined in the National Historic Preservation Act regulations means any prehistoric or historic district, site, building, structure, or object included in, or eligible for inclusion in, the National Register of Historic Places maintained by the Secretary of the Interior. This term includes artifacts, records, and remains that are related to and located within such properties. The term includes properties of traditional religious and cultural importance to an Indian tribe or Native Hawaiian organization and that meet the National Register criteria.

Impaired Water (or "Water Quality Impaired Water" or "Water Quality Limited Segment") – for the purposes of this permit, waters identified by a state, tribe, or EPA as not meeting an applicable water quality standard, and require development of a total maximum daily load (TMDL) (pursuant to Section 303(d) of the CWA), or are addressed by an EPA-approved or established TMDL, or are covered by pollution controls requirements that meet the requirements of 40 FR 130.7(b)(1). For discharges that enter a separate storm sewer system prior to discharge, the first water of the U.S. to which you discharge is the waterbody that receives the stormwater discharge from the storm sewer system.

Indian Country or Indian Country Lands – defined at 40 CFR 122.2 as:

a). All land within the limits of any Indian reservation under the jurisdiction of the United States Government, notwithstanding the issuance of any patent, and including rights-of-way running through the reservation;

b). All dependent Indian communities within the borders of the United States, whether within the original or subsequently acquired territory thereof, and whether within or without the limits of a State: and

c). All Indian allotments, the Indian titles to which have not been extinguished, including rights-of-way running through the same. This definition includes all land held in trust for an Indian tribe. (18 U.S.C. 1151)

Infeasible – for the purposes of this permit, infeasible means not technologically possible or not economically practicable and achievable in light of best industry practices. EPA notes that it does not intend for any permit requirement to conflict with state water rights law.

Industrial Activity – the 10 categories of industrial activities included in the definition of "stormwater discharges associated with industrial activity" as defined in 40 CFR 122.26(b)(14)(i)-(ix) and (xi).

Industrial Stormwater – stormwater runoff from industrial activity.

Measurable Storm Event – a precipitation event that results in a measurable amount of precipitation (i.e., a storm event that results in an actual discharge) and that follows the preceding storm event by at least 72 hours (3-days). The 72-hour storm interval does not apply if you document that less than a 72-hour interval is representative for local storm events.

Minimize – for the purposes of this permit, minimize means to reduce and/or eliminate to the extent achievable using control measures that are technologically available and economically practicable and achievable in light of best industry practices.

Municipal Separate Storm Sewer (MS4) – defined at 40 CFR §122.26(b)(8) as a conveyance or system of conveyances (including roads with drainage systems, municipal streets, catch basins, curbs, gutters, ditches, manmade channels, or storm drains):

1. Owned or operated by a state, city, town, borough, county, parish, district, association, or other public body (created by or pursuant to State law) having jurisdiction over disposal of sewage, industrial wastes, stormwater, or other wastes, including special districts under state law such as a sewer district, flood control district or drainage district, or similar entity, or an Indian tribe or an authorized Indian tribal organization, or a designated and approved management agency under section 208 of the CWA that discharges to waters of the United States;

2. Designed or used for collecting or conveying stormwater;

3. Which is not a combined sewer; and

4. Which is not part of a Publicly Owned Treatment Works (POTW) as defined at 40 CFR 122.2. See 40 CFR 122.26(b)(4) and (b)(7).

National Pollutant Discharge Elimination System (NPDES) – defined at 40 CFR §122.2 as the national program for issuing, modifying, revoking and reissuing, terminating, monitoring and enforcing permits, and imposing and enforcing pretreatment requirements, under sections 307, 402, 318, and 405 of CWA. The term includes an 'approved program.'

New Discharger – a facility from which there is or may be a discharge, that did not commence the discharge of pollutants at a particular site prior to August 13, 1979, which is not a new source, and which has never received a finally effective NPDES permit for discharges at that site. See 40 CFR 122.2.

New Source – any building, structure, facility, or installation from which there is or may be a "discharge of pollutants," the construction of which commenced:

- after promulgation of standards of performance under section 306 of the CWA which are applicable to such source, or
- after proposal of standards of performance in accordance with section 306 of the CWA which are applicable to such source, but only if the standards are promulgated in accordance with section 306 within 120 days of their proposal. See 40 CFR 122.2.

New Source Performance Standards (NSPS) – technology-based standards for facilities that qualify as new sources under 40 CFR 122.2 and 40 CFR 122.29.

No Exposure – all industrial materials or activities protected by a storm-resistant shelter to prevent exposure to rain, snow, snowmelt, and/or runoff. See 40 CFR 122.26(g).

Non-Stormwater Discharges – discharges that do not originate from storm events. They can include, but are not limited to, discharges of process water, air conditioner condensate, non-contact cooling water, pavement wash water, external building washdown, irrigation water, or uncontaminated ground water or spring water.

Notice of Intent (NOI) – the form (electronic or paper) required for authorization of coverage under the Multi-Sector General Permit.

Notice of Termination (NOT) – the form (electronic or paper) required for terminating coverage under the Multi-Sector General Permit.

Operator – any entity with a stormwater discharge associated with industrial activity that meets either of the following two criteria:

1. The entity has operational control over industrial activities, including the ability to make modifications to those activities; or

2. The entity has day-to-day operational control of activities at a facility necessary to ensure compliance with the permit (e.g., the entity is authorized to direct workers at a facility to carry out activities required by the permit).

Outfall – see "Discharge Point."

Permitting Authority – for the purposes of this permit, EPA, a Regional Administrator of EPA, or an authorized representative.

Person – an individual, association, partnership, corporation, municipality, State or Federal agency, or an agent or employee thereof. See 40 CFR 122.2.

Point Source – any discernible, confined, and discrete conveyance, including but not limited to any pipe, ditch, channel, tunnel, conduit, well, discrete fissure, container, rolling stock, concentrated animal feeding operation, landfill leachate collection system, vessel, or other floating craft from which pollutants are or may be discharged. This term does not include return flows from irrigated agriculture or agricultural stormwater runoff. See 40 CFR 122.2.

Pollutant – defined at 40 CFR §122.2. A partial listing from this definition includes: dredged spoil, solid waste, incinerator residue, filter backwash, sewage, garbage, sewage sludge, munitions, chemical wastes, biological materials, heat, wrecked or discarded equipment, rock, sand, cellar dirt, and industrial, municipal and agricultural waste discharged into water. See 40 CFR 122.2.

Pollutant of Concern – a pollutant which causes or contributes to a violation of a water quality standard, including a pollutant which is identified as causing an impairment in a state's 303(d) list.

Primary Industrial Activity – includes any activities performed on-site which are (1) identified by the facility's primary SIC code and included in the descriptions of 122.26(b)(14)(ii), (iii), (vi), or (viii); or (2) included in the narrative descriptions of 122.26(b)(14)(i), (iv), (v), (vii), or (ix). [For co-located activities covered by multiple SIC codes, it is recommended that the primary industrial determination be based on the value of receipts or revenues or, if such information is not available for a particular facility, the number of employees or production rate for each process may be compared. The operation that generates the most revenue or employs the most personnel is the operation in which the facility is primarily engaged. In situations where the vast majority of on-site activity falls within one SIC code, that activity may be the primary industrial activity.] Narrative descriptions in 40 CFR 122.26(b)(14) identified above include: (i) activities subject to stormwater effluent limitations guidelines, new source performance standards, or toxic pollutant effluent standards; (iv) hazardous waste treatment storage, or disposal facilities including those that are operating under interim status or a permit under subtitle C of the Resource Conservation and Recovery Act (RCRA); (v) landfills, land application sites and open

dumps that receive or have received industrial wastes; (vii) steam electric power generating facilities; and (ix) sewage treatment works with a design flow of 1.0 mgd or more.

Qualified Personnel – qualified personnel are those who are knowledgeable in the principles and practices of industrial stormwater controls and pollution prevention, and who possess the education and ability to assess conditions at the industrial facility that could impact stormwater quality, and the education and ability to assess the effectiveness of stormwater controls selected and installed to meet the requirements of the permit.

Reportable Quantity Release – a release of a hazardous substance at or above the established legal threshold that requires emergency notification. Refer to 40 CFR Parts 110, 117, and 302 for complete definitions and reportable quantities for which notification is required.

Restricted Information – for the purposes of this permit, information that is privileged or that is otherwise protected from disclosure pursuant to applicable statutes, Executive Orders, or regulations. Such information includes, but is not limited to: classified national security information, protected critical infrastructure information, sensitive security information, and proprietary business information.

Runoff Coefficient – the fraction of total rainfall that will appear at the conveyance as runoff. See 40 CFR 122.26(b)(11).

Run-On – sources of stormwater that drain from land located upslope or upstream from the regulated facily in question.

Saline Water or Saltwater – for the purposes of this permit, a waterbody with salinity that is equal to or exceeds 10 parts per thousand 95 percent or more of the time, unless otherwise defined as a coastal or marine water by the applicable state or tribal surface water quality standards.

Semi-Arid Areas – areas where annual rainfall averages from 10 to 20 inches.

Significant Materials – includes, but is not limited to: raw materials; fuels; materials such as solvents, detergents, and plastic pellets; finished materials such as metallic products; raw materials used in food processing or production; hazardous substances designated under section 101(14) of CERCLA; any chemical the facility is required to report pursuant to section 313 of Title III of SARA; fertilizers; pesticides; and waste products such as ashes, slag and sludge that have the potential to be released with stormwater discharges. See 40 CFR 122.26(b)(12).

Special Aquatic Sites – sites identified in 40 CFR 230 Subpart E. These are geographic areas, large or small, possessing special ecological characteristics of productivity, habitat, wildlife protection, or other important and easily disrupted ecological values. These areas are generally recognized as significantly influencing or positively contributing to the general overall environmental health or vitality of the entire ecosystem of a region.

Spill – for the purpose of this permit, the release of a hazardous or toxic substance from its container or containment.

Stormwater – stormwater runoff, snow melt runoff, and surface runoff and drainage. See 40 CFR 122.26(b)(13).

Stormwater Controls – see "Control Measures."

Stormwater Discharges Associated with Construction Activity – as used in this permit, a discharge of pollutants in stormwater runoff from areas where land-disturbing activities (e.g., clearing, grading, or excavating) occur, or where construction materials or equipment storage or maintenance (e.g., fill piles, borrow areas, concrete truck washout, fueling), or other industrial stormwater directly related to the construction process (e.g., concrete or asphalt batch plants) are located. See 40 CFR 122.26(b)(14)(x) and 40 CFR 122.26(b)(15).

Stormwater Discharges Associated with Industrial Activity – the discharge from any conveyance that is used for collecting and conveying stormwater and that is directly related to manufacturing, processing or raw materials storage areas at an industrial plant. The term does not include discharges from facilities or activities excluded from the NPDES program under Part 122. For the categories of industries identified in this section, the term includes, but is not limited to, stormwater discharges from industrial plant yards; immediate access roads and rail lines used or traveled by carriers of raw materials, manufactured products, waste material, or by-products used or created by the facility; material handling sites; refuse sites; sites used for the application or disposal of process waste waters (as defined at part 401 of this chapter); sites used for the storage and maintenance of material handling equipment; sites used for residual treatment, storage, or disposal; shipping and receiving areas; manufacturing buildings; storage areas (including tank farms) for raw materials, and intermediate and final products; and areas where industrial activity has taken place in the past and significant materials remain and are exposed to stormwater. For the purposes of this paragraph, material handling activities include storage, loading and unloading, transportation, or conveyance of any raw material, intermediate product, final product, by-product or waste product. The term excludes areas located on plant lands separate from the plant's industrial activities, such as office buildings and accompanying parking lots as long as the drainage from the excluded areas is not mixed with stormwater drained from the above described areas. Industrial facilities include those that are federally, state, or municipally owned or operated that meet the description of the facilities listed in 40 CFR 122.26(b)(14). The term also includes those facilities designated under the provisions of 40 CFR 122.26(a)(1)(v). See 40 CFR 122.26(b)(14).

Stormwater Team – the group of individuals responsible for oversight of the development and modifications of the SWPPP, and oversight of compliance with the permit requirements. The individuals on the "Stormwater Team" must be identified in the SWPPP.

Storm Event – a precipitation event that results in a measurable amount of precipitation.

Threatened Species – defined in the Endangered Species Act at 16 U.S.C. 1531 as any species which is likely to become an endangered species within the foreseeable future throughout all or a significant portion of its range.

Tier 2 Waters – For antidegradation purposes, pursuant to 40 CFR 131.12(a)(2), Tier 2 waters are characterized as having water quality that exceeds the levels necessary to support propagation of fish, shellfish, and wildlife and recreation in and on the water.

Tier 2.5 Waters – For antidegradation purposes, Tier 2.5 waters are those waters designated by States or Tribes as requiring a level of protection equal to and above that given to Tier 2 waters, but less than that given Tier 3 waters.States have special requirements for these waters.

Tier 3 Waters – For antidegradation purposes, pursuant to 40 CFR 131.12(a)(3), Tier 3 waters are identified by states as having high quality waters constituting an Outstanding National Resource Water (ONRW), such as waters of National Parks and State Parks, wildlife refuges, and waters of exceptional recreational or ecological significance.

Total Maximum Daily Loads (TMDLs) – The sum of the individual wasteload allocations (WLAs) for point sources and load allocations (LAs) for nonpoint sources and natural background. If receiving water has only one point source discharger, the TMDL is the sum of that point source WLA plus the LAs for any nonpoint sources of pollution and natural background sources, tributaries, or adjacent segments. TMDLs can be expressed in terms of either mass per time, toxicity, or other appropriate measure. (See section 303(d) of the Clean Water Act and 40 CFR 130.2 and 130.7).

Toxic Waste – see "Hazardous Materials."

Uncontaminated Discharge – a discharge that does not cause or contribute to an exceedance of applicable water quality standards.

Upset – Upset means an exceptional incident in which there is unintentional and temporary noncompliance with technology based permit effluent limitations because of factors beyond your reasonable control. An upset does not include noncompliance to the extent caused by operational error, improperly designed treatment facilities, inadequate treatment facilities, lack of preventive maintenance, or careless or improper operation. See 40 CFR 122.41(n)(1).

Water Quality Impaired – See "Impaired Water."

Water Quality Standards – defined in 40 CFR § 131.3, and are provisions of State or Federal law which consist of a designated use or uses for the waters of the United States, water quality criteria for such waters based upon such uses, and an antidegradation policy to protect high-quality waters. Water quality standards protect the public health or welfare, enhance the quality of water and serve the purposes of the Act.

Waters of the United States – See definition at at 40 CFR §122.2.

A.2. ABBREVIATIONS AND ACRONYMS

BAT – Best Available Technology Economically Achievable

BOD5 – Biochemical Oxygen Demand (5-day test)

BMP – Best Management Practice

BPJ – Best Professional Judgment

BPT – Best Practicable Control Technology Currently Available

CERCLA – Comprehensive Environmental Response, Compensation and Liability Act

CGP – Construction General Permit

CFR – Code of Federal Regulations

COD – Chemical Oxygen Demand

CWA – Clean Water Act (or the Federal Water Pollution Control Act, 33 U.S.C. §1251 *et seq*)

CWT – Centralized Waste Treatment

DMR – Discharge Monitoring Report

ELG – Effluent Limitations Guideline

EPA – U. S. Environmental Protection Agency

ESA – Endangered Species Act

FWS – U. S. Fish and Wildlife Service

LA – Load Allocations

MGD – Million Gallons per Day

MOS – Margin of Safety

MS4 – Municipal Separate Storm Sewer System

MSGP – Multi-Sector General Permit

NAICS – North American Industry Classification System

NEPA – National Environmental Policy Act

NET – NPDES eReporting Tool

NHPA – National Historic Preservation Act

NMFS – U. S. National Marine Fisheries Service

NOI – Notice of Intent

NOE – No Exposure

NOT – Notice of Termination

NPDES – National Pollutant Discharge Elimination System

NRC – National Response Center

NRHP – National Register of Historic Places

NSPS – New Source Performance Standard

NTU – Nephelometric Turbidity Unit

OMB – U. S. Office of Management and Budget

ORW – Outstanding Resource Water

OSM – U. S. Office of Surface Mining

POTW – Publicly Owned Treatment Works

RCRA – Resource Conservation and Recovery Act

RQ – Reportable Quantity

SARA – Superfund Amendments and Reauthorization Act

SDS – Safety Data Sheet

SHPO – State Historic Preservation Officer

SIC – Standard Industrial Classification

SMCRA – Surface Mining Control and Reclamation Act

SPCC – Spill Prevention, Control, and Countermeasures

SWPPP – Stormwater Pollution Prevention Plan

THPO – Tribal Historic Preservation Officer

TMDL – Total Maximum Daily Load

TSDF – Treatment, Storage, or Disposal Facility

TSS – Total Suspended Solids

USGS – United States Geological Survey

WLA – Wasteload Allocation

WQS – Water Quality Standard

Appendix B - Standard Permit Conditions.

Standard permit conditions in Appendix B are consistent with the general permit provisions required under 40 CFR 122.41.

B.1 Duty To Comply.

You must comply with all conditions of this permit. Any permit noncompliance constitutes a violation of the Clean Water Act and is grounds for enforcement action; for permit termination, revocation and reissuance, or modification; or for denial of a permit renewal application.

A. You must comply with effluent standards or prohibitions established under section 307(a) of the Clean Water Act for toxic pollutants within the time provided in the regulations that establish these standards, even if the permit has not yet been modified to incorporate the requirement.

B. Penalties for Violations of Permit Conditions: The Director will adjust the civil and administrative penalties listed below in accordance with the Civil Monetary Penalty Inflation Adjustment Rule (61 FR 252, December 31, 1996, pp. 69359-69366, as corrected in 62 FR 54, March 20, 1997, pp.13514-13517) as mandated by the Debt Collection Improvement Act of 1996 for inflation on a periodic basis. This rule allows EPA's penalties to keep pace with inflation. The Agency is required to review its penalties at least once every 4 years thereafter and to adjust them as necessary for inflation according to a specified formula. The civil and administrative penalties following were adjusted for inflation starting in 1996.

1. Criminal Penalties.

1.1 Negligent Violations. The CWA provides that any person who negligently violates permit conditions implementing Sections 301, 302, 306, 307, 308, 318, or 405 of the Act is subject to criminal penalties of not less than $2,500 nor more than $25,000 per day of violation, or imprisonment of not more than one year, or both. In the case of a second or subsequent conviction for a negligent violation, a person shall be subject to criminal penalties of not more than $50,000 per day of violation or by imprisonment of not more than two years, or both.

1.2. *Knowing Violations.* The CWA provides that any person who knowingly violates permit conditions implementing Sections 301, 302, 306, 307, 308, 318, or 405 of the Act is subject to a fine of not less than $5,000 nor more than $50,000 per day of violation, or by imprisonment for not more than 3 years, or both. In the case of a second or subsequent conviction for a knowing violation, a person shall be subject to criminal penalties of not more than $100,000 per day of violation, or imprisonment of not more than 6 years, or both.

1.3. *Knowing Endangerment.* The CWA provides that any person who knowingly violates permit conditions implementing Sections 301, 302, 306, 307, 308, 318, or 405 of the Act and who knows at that time that he or she is placing another person in imminent danger of death or serious bodily injury shall upon conviction be subject to a fine of not more than $250,000 or by imprisonment of not more than 15 years, or both. In the case of a second or subsequent conviction for a knowing endangerment violation, a person

shall be subject to a fine of not more than $500,000 or by imprisonment of not more than 30 years, or both. An organization, as defined in section 309(c)(3)(B)(iii) of the Act, shall, upon conviction of violating the imminent danger provision be subject to a fine of not more than $1,000,000 and can fined up to $2,000,000 for second or subsequent convictions.

1.4. *False Statement*. The CWA provides that any person who falsifies, tampers with, or knowingly renders inaccurate any monitoring device or method required to be maintained under this permit shall, upon conviction, be punished by a fine of not more than $10,000, or by imprisonment for not more than 2 years, or both. If a conviction of a person is for a violation committed after a first conviction of such person under this paragraph, punishment is a fine of not more than $20,000 per day of violation, or by imprisonment of not more than 4 years, or both. The Act further provides that any person who knowingly makes any false statement, representation, or certification in any record or other document submitted or required to be maintained under this permit, including monitoring reports or reports of compliance or non-compliance shall, upon conviction, be punished by a fine of not more than $10,000 per violation, or by imprisonment for not more than 6 months per violation, or by both.

2. *Civil Penalties.* The CWA provides that any person who violates a permit condition implementing Sections 301, 302, 306, 307, 308, 318, or 405 of the Act is subject to a civil penalty not to exceed the maximum amounts authorized by Section 309(d) of the Act and the Federal Civil Penalties Inflation Adjustment Act (28 U.S.C. § 2461 note) as amended by the Debt Collection Improvement Act (31 U.S.C. § 3701 note) (currently $37,500 per day for each violation).

3. *Administrative Penalties.* The CWA provides that any person who violates a permit condition implementing Sections 301, 302, 306, 307, 308, 318, or 405 of the Act is subject to an administrative penalty, as follows

3.1. *Class I Penalty*. Not to exceed the maximum amounts authorized by Section 309(g)(2)(A) of the Act and the Federal Civil Penalties Inflation Adjustment Act (28 U.S.C. § 2461 note) as amended by the Debt Collection Improvement Act (31 U.S.C. § 3701 note) (currently $16,000 per violation, with the maximum amount of any Class I penalty assessed not to exceed $37,500).

3.2. *Class II Penalty*. Not to exceed the maximum amounts authorized by Section 309(g)(2)(B) of the Act and the Federal Civil Penalties Inflation Adjustment Act (28 U.S.C. § 2461 note) as amended by the Debt Collection Improvement Act (31 U.S.C. § 3701 note) (currently $11,000 per day for each day during which the violation continues, with the maximum amount of any Class II penalty not to exceed $177,500).

B.2 Duty to Reapply.

If you wish to continue an activity regulated by this permit after the expiration date of this permit, you must apply for and obtain authorization as required by the new permit once EPA issues it.

B.3 Need to Halt or Reduce Activity Not a Defense.

It shall not be a defense for you in an enforcement action that it would have been necessary to halt or reduce the permitted activity in order to maintain compliance with the conditions of this permit.

B.4 Duty to Mitigate.

You must take all reasonable steps to minimize or prevent any discharge in violation of this permit which has a reasonable likelihood of adversely affecting human health or the environment.

B.5 Proper Operation and Maintenance.

You must at all times properly operate and maintain all facilities and systems of treatment and control (and related appurtenances) which are installed or used by you to achieve compliance with the conditions of this permit. Proper operation and maintenance also includes adequate laboratory controls and appropriate quality assurance procedures. This provision requires the operation of backup or auxiliary facilities or similar systems which are installed by you only when the operation is necessary to achieve compliance with the conditions of this permit.

B.6 Permit Actions.

This permit may be modified, revoked and reissued, or terminated for cause. Your filing of a request for a permit modification, revocation and reissuance, or termination, or a notification of planned changes or anticipated noncompliance does not stay any permit condition.

B.7 Property Rights.

This permit does not convey any property rights of any sort, or any exclusive privileges.

B.8 Duty to Provide Information.

You must furnish to EPA or an authorized representative (including an authorized contractor acting as a representative of EPA), within a reasonable time, any information which EPA may request to determine whether cause exists for modifying, revoking and reissuing, or terminating this permit or to determine compliance with this permit. You must also furnish to EPA or an authorized representative upon request, copies of records required to be kept by this permit.

B.9 Inspection and Entry.

You must allow EPA or an authorized representative (including an authorized contractor acting as a representative of EPA), upon presentation of credentials and other documents as may be required by law, to:

A. Enter upon your premises where a regulated facility or activity is located or conducted, or where records must be kept under the conditions of this permit;

B. Have access to and copy, at reasonable times, any records that must be kept under the conditions of this permit;

C. Inspect at reasonable times any facilities, equipment (including monitoring and control equipment), practices, or operations regulated or required under this permit; and

D. Sample or monitor at reasonable times, for the purposes of assuring permit compliance or as otherwise authorized by the Clean Water Act, any substances or parameters at any location.

B.10 Monitoring and Records.

A. Samples and measurements taken for the purpose of monitoring must be representative of the volume and nature of the monitored activity.

B. You must retain records of all monitoring information, including all calibration and maintenance records and all original strip chart recordings for continuous monitoring instrumentation, copies of all reports required by this permit, and records of all data used to complete the application for this permit, for a period of at least three years from the date the permit expires or the date the permittee's authorization is terminated. This period may be extended by request of EPA at any time.

C. Records of monitoring information must include:

1. The date, exact place, and time of sampling or measurements;
2. The individual(s) who performed the sampling or measurements;
3. The date(s) analyses were performed
4. The individual(s) who performed the analyses;
5. The analytical techniques or methods used; and
6. The results of such analyses.

D. Monitoring must be conducted according to test procedures approved under 40 CFR Part 136, unless other test procedures have been specified in the permit.

E. The Clean Water Act provides that any person who falsifies, tampers with, or knowingly renders inaccurate any monitoring device or method required to be maintained under this permit shall, upon conviction, be punished by a fine of not more than $10,000, or by imprisonment for not more than 2 years, or both. If a conviction of a person is for a violation committed after a first conviction of such person under this paragraph, punishment is a fine of not more than $20,000 per day of violation, or by imprisonment of not more than 4 years, or both.

B.11 Signatory Requirements.

A. NOIs, NOTs, and NOEs must be signed as follows:

1. For a corporation: By a responsible corporate officer. For the purpose of this subsection, a responsible corporate officer means: (i) a president, secretary, treasurer, or vice-president of the corporation in charge of a principal business function, or any other person who performs similar policy- or decision-making functions for the corporation, or (ii) the manager of one or more manufacturing, production, or operating facilities, provided, the manager is authorized to make management decisions which govern the operation of the regulated facility including having the explicit or implicit duty of making major capital investment

recommendations, and initiating and directing other comprehensive measures to assure long term environmental compliance with environmental laws and regulations; the manager can ensure that the necessary systems are established or actions taken to gather complete and accurate information for permit application requirements; and where authority to sign documents has been assigned or delegated to the manager in accordance with corporate procedures.

2. For a partnership or sole proprietorship: By a general partner or the proprietor, respectively; or

3. For a municipality, state, federal, or other public agency: By either a principal executive officer or ranking elected official. For purposes of this subsection, a principal executive officer of a federal agency includes (i) the chief executive officer of the agency, or (ii) a senior executive officer having responsibility for the overall operations of a principal geographic unit of the agency (e.g., Regional Administrator of EPA).

B. Your SWPPP, including changes to your SWPPP to document any corrective actions taken as required by Part 3.1, and any other compliance documentation required under this permit, including the Annual Report, DMRs, inspection reports, and corrective action reports, must be signed by a person described in Appendix B, Subsection 11.A above or by a duly authorized representative of that person. A person is a duly authorized representative only if:

1. The authorization is made in writing by a person described in Appendix B, Subsection 11.A;

2. The authorization specifies either an individual or a position having responsibility for the overall operation of the regulated facility or activity such as the position of plant manager, operator of a well or a well field, superintendent, position of equivalent responsibility, or an individual or position having overall responsibility for environmental matters for the company. (A duly authorized representative may thus be either a named individual or any individual occupying a named position); and

3. The signed and dated written authorization is included in the SWPPP. A copy must be submitted to EPA, if requested.

C. All other changes to your SWPPP, and other compliance documentation required under Part 5.4, must be signed and dated by the person preparing the change or documentation.

D. Changes to Authorization. If an authorization under Part 1.3.1.3 is no longer accurate because the industrial facility has been purchased by a different entity, a new NOI satisfying the requirements of Part 1.3 must be submitted to EPA. See Table 1-2 in Part 1.3.1.1 of the permit. However, if the only change that is occurring is a change in contact information or a change in the facility's address, the operator need only make a modification to the existing NOI submitted for authorization.

E. Any person signing documents in accordance with Appendix B, Subsections 11.A or 11.B above must include the following certification:

> "I certify under penalty of law that this document and all attachments were prepared under my direction or supervision in accordance with a system designed to assure that qualified personnel properly gathered and evaluated the

information contained therein. Based on my inquiry of the person or persons who manage the system, or those persons directly responsible for gathering the information, the information contained is, to the best of my knowledge and belief, true, accurate, and complete. I am aware that there are significant penalties for submitting false information, including the possibility of fine and imprisonment for knowing violations."

F. For persons signing documents electronically, in addition to meeting other applicable requirements in Appendix I, Subsection B.11, such signatures must be legally dependable with no less evidentiary value than their paper equivalent.

G. The CWA provides that any person who knowingly makes any false statement, representation, or certification in any record or other document submitted or required to be maintained under this permit, including monitoring reports or reports of compliance or non-compliance shall, upon conviction, be punished by a fine of not more than $10,000 per violation, or by imprisonment for not more than 6 months per violation, or by both.

B.12 Reporting Requirements.

A. Planned changes. You must give notice to EPA as soon as possible, but no fewer than 30 days, of any planned physical alterations or additions to the permitted facility. Notice is required only when:

1. The alteration or addition to a permitted facility may meet one of the criteria for determining whether a facility is a new source in 40 CFR 122.29(b); or

2. The alteration or addition could significantly change the nature or increase the quantity of pollutants discharged. This notification applies to pollutants which are subject neither to effluent limitations in the permit, nor to notification requirements under 40 CFR 122.42(a)(1).

B. Anticipated noncompliance. You must give advance notice to EPA of any planned changes in the permitted facility or activity which may result in noncompliance with permit requirements.

C. Transfers. This permit is not transferable to any person except after notice to EPA. Where a facility wants to change the name of the permittee, the original permittee (the first owner or operators) must submit a Notice of Termination pursuant to Part 1.4. The new owner or operator must submit a Notice of Intent in accordance with Part 1.3.1 and Table 1-2. See also requirements in Appendix B, Subsections 11.B and 11.D.

D. Monitoring reports. Monitoring results must be reported at the intervals specified elsewhere in this permit.

1. Pursuant to Part 7.1, all monitoring data collected pursuant to Part 6 must be submitted to EPA using EPA's online DMR system (http://www.epa.gov/netdmr/).

2. If you monitor any pollutant more frequently than required by the permit using test procedures approved under 40 CFR Part 136 or as specified in the permit, the results of this monitoring must be included in the calculation and reporting of the data submitted in the DMR.

3. Calculations for all limitations which require averaging of measurements must use an arithmetic mean. For averaging purposes, use a value of zero for any individual sample parameter, which is determined to be less than the method detection limit. For sample values that fall between the method detection level and the quantitation limit (i.e., a confirmed detection but below the level that can be reliably quantified), use a value halfway between zero and the quantitation limit.

E. Compliance schedules. Reports of compliance or noncompliance with, or any progress reports on, interim and final requirements contained in any compliance schedule of this permit must be submitted no later than 14 days following each schedule date.

F. Twenty-four hour reporting.

1. You must report any noncompliance which may endanger health or the environment. Any information must be provided orally within 24 hours from the time you become aware of the circumstances. A written submission must also be provided within five days of the time you become aware of the circumstances. The written submission must contain a description of the noncompliance and its cause; the period of noncompliance, including exact dates and times, and if the noncompliance has not been corrected, the anticipated time it is expected to continue; and steps taken or planned to reduce, eliminate, and prevent reoccurrence of the noncompliance.

2. The following shall be included as information which must be reported within 24 hours under this paragraph.

a. Any unanticipated bypass which exceeds any effluent limitation in the permit. (See 40 CFR 122.41(m)(3)(ii))

b. Any upset which exceeds any effluent limitation in the permit

c. Violation of a maximum daily discharge limit for any numeric effluent limitation. (See 40 CFR 122.44(g).)

3. EPA may waive the written report on a case-by-case basis for reports under Appendix B, Subsection 12.F.2 if the oral report has been received within 24 hours.

G. Other noncompliance. You must report all instances of noncompliance not reported under Appendix B, Subsections 12.D, 12.E, and 12.F, at the time monitoring reports are submitted. The reports must contain the information listed in Appendix B, Subsection 12.F.

H. Other information. Where you become aware that you failed to submit any relevant facts in your NOI, or submitted incorrect information in your NOI or in any report to the Permitting Authority, you must promptly submit such facts or information.

B.13 Bypass.

A. Definitions.

1. Bypass means the intentional diversion of waste streams from any portion of a treatment facility See 40 CFR 122.41(m)(1)(i).

2. Severe property damage means substantial physical damage to property, damage to the treatment facilities which causes them to become inoperable, or substantial and permanent loss of natural resources which can reasonably be expected to occur in the absence of a bypass. Severe property damage does not mean economic loss caused by delays in production. See 40 CFR 122.41(m)(1)(ii).

B. Bypass not exceeding limitations. You may allow any bypass to occur which does not cause effluent limitations to be exceeded, but only if it also is for essential maintenance to assure efficient operation. These bypasses are not subject to the provisions of Appendix B, Subsections 13.C and 13.D. See 40 CFR 122.41(m)(2).

C. Notice.

1. Anticipated bypass. If you know in advance of the need for a bypass, you must submit prior notice, if possible at least ten days before the date of the bypass. See 40 CFR 122.41(m)(3)(i).

2. Unanticipated bypass. You must submit notice of an unanticipated bypass as required in Appendix B, Subsection 12.F (24-hour notice). See 40 CFR 122.41(m)(3)(ii).

D. Prohibition of bypass. See 40 CFR 122.41(m)(4).

1. Bypass is prohibited, and EPA may take enforcement action against you for bypass, unless:

a. Bypass was unavoidable to prevent loss of life, personal injury, or severe property damage;

b. There were no feasible alternatives to the bypass, such as the use of auxiliary treatment facilities, retention of untreated wastes, or maintenance during normal periods of equipment downtime. This condition is not satisfied if adequate back-up equipment should have been installed in the exercise of reasonable engineering judgment to prevent a bypass which occurred during normal periods of equipment downtime or preventive maintenance; and

c. You submitted notices as required under Appendix B, Subsection 13.C.

2. EPA may approve an anticipated bypass, after considering its adverse effects, if EPA determines that it will meet the three conditions listed above in Appendix B, Subsection 13.D.1.

B.14 Upset.

A. Definition. Upset means an exceptional incident in which there is unintentional and temporary noncompliance with technology based permit effluent limitations because of factors beyond your reasonable control. An upset does not include noncompliance to the extent caused by operational error, improperly designed treatment facilities, inadequate treatment facilities, lack of preventive maintenance, or careless or improper operation. See 40 CFR 122.41(n)(1).

B. Effect of an upset. An upset constitutes an affirmative defense to an action brought for noncompliance with such technology based permit effluent limitations if the requirements

of Appendix B, Subsection 14.C are met. No determination made during administrative review of claims that noncompliance was caused by upset, and before an action for noncompliance, is final administrative action subject to judicial review. See 40 CFR 122.41(n)(2).

C. Conditions necessary for a demonstration of upset. See 40 CFR 122.41(n)(3). A permittee who wishes to establish the affirmative defense of upset must demonstrate, through properly signed, contemporaneous operating logs, or other relevant evidence that:

1. An upset occurred and that you can identify the cause(s) of the upset;

2. The permitted facility was at the time being properly operated; and

3. You submitted notice of the upset as required in Appendix B, Subsection 12.F.2.b (24 hour notice).

4. You complied with any remedial measures required under Appendix B, Subsection 4.

D. Burden of proof. In any enforcement proceeding, you, as the one seeking to establish the occurrence of an upset, have the burden of proof. See 40 CFR 122.41(n)(4).

B.15 Retention of Records.

Copies of the SWPPP and all documentation required by this permit, including records of all data used to complete the NOI to be covered by this permit, must be retained for at least three years from the date that permit coverage expires or is terminated. This period may be extended by request of EPA at any time.

B.16 Reopener Clause.

A. Procedures for modification or revocation. Permit modification or revocation will be conducted according to 40 CFR §122.62, §122.63, §122.64 and §124.5.

B. Water quality protection. If there is evidence indicating that the stormwater discharges authorized by this permit cause, have the reasonable potential to cause or contribute to an excursion above any applicable water quality standard, you may be required to obtain an individual permit in accordance with Part 1.3.3 of this permit, or the permit may be modified to include different limitations and/or requirements.

C. Timing of permit modification. EPA may elect to modify the permit prior to its expiration (rather than waiting for the new permit cycle) to comply with any new statutory or regulatory requirements, such as for effluent limitation guidelines that may be promulgated in the course of the current permit cycle.

Appendix C - Permit Areas Eligible for Coverage.

EPA can only provide permit coverage in these areas and for classes of discharges that are outside the scope of a state's NPDES program authorization.

C.1 EPA Region 1: Connecticut, Massachusetts, Maine, New Hampshire, Rhode Island, Vermont.

This permit offers NPDES permit coverage for stormwater discharges associated with industrial activity from the following areas in EPA Region 1:

Master Permit Number	Areas of Coverage/Where EPA Is Permitting Authority
CTR05I000	Indian Country within the State of Connecticut
MAR050000	Commonwealth of Massachusetts, except Indian country
MAR05I000	Indian country within the Commonwealth of Massachusetts
NHR050000	State of New Hampshire
RIR05I000	Indian country within the State of Rhode Island
VTR05F000	Areas in the State of Vermont subject to industrial activity by a Federal Operator

For stormwater discharges in EPA Region 1 outside the areas of coverage identified above, please contact your state NPDES permitting authority to obtain coverage under a state-issued NPDES permit.

C.2 EPA Region 2: New Jersey, New York, Puerto Rico, Virgin Islands.

This permit offers NPDES permit coverage for stormwater discharges associated with industrial activity from the following areas in EPA Region 2:

Master Permit Number	Areas of Coverage/Where EPA Is Permitting Authority
PRR050000	Commonwealth of Puerto Rico

For stormwater discharges in EPA Region 2 outside the areas of coverage identified above, please contact your state NPDES permitting authority to obtain coverage under a state-issued NPDES permit.

C.3 EPA Region 3: Delaware, District of Columbia, Maryland, Pennsylvania, Virginia, West Virginia.

This permit offers NPDES permit coverage for stormwater discharges associated with industrial activity from the following areas in EPA Region 3:

Master Permit Number	Areas of Coverage/Where EPA Is Permitting Authority
DCR050000	District of Columbia
DER05F000	Areas in the State of Delaware subject to industrial activity by a Federal Operator

For stormwater discharges in EPA Region 3 outside the areas of coverage identified above, please contact your state NPDES permitting authority to obtain coverage under a state-issued NPDES permit.

C.4 EPA Region 4: Alabama, Florida, Georgia, Kentucky, Mississippi, North Carolina, South Carolina, Tennessee (Coverage not available under this permit).

For stormwater discharges in EPA Region 4, please contact your state NPDES permitting authority to obtain coverage under a state-issued NPDES permit.

C.5 EPA Region 5: Illinois, Indiana, Michigan, Minnesota, Ohio, Wisconsin.

This permit offers NPDES permit coverage for stormwater discharges associated with industrial activity from the following areas in EPA Region 5:

Master Permit Number	Areas of Coverage/Where EPA Is Permitting Authority
MIR05I000	Indian country within the State of Michigan
MNR05I000	Indian country within the State of Minnesota
WIR05I000	Indian country within the State of Wisconsin (except for facilities on Sokaogon Chippewa Community lands and Bad River Band of Lake Superior Tribe of Chippewa Indians lands, see EPA Region 5 for an individual permit application).

For stormwater discharges in EPA Region 5 outside the areas of coverage identified above, please contact your state NPDES permitting authority to obtain coverage under a state-issued NPDES permit.

C.6 EPA Region 6: Arkansas, Louisiana, Oklahoma, Texas, and New Mexico (except see Region 9 for Navajo lands, and see Region 8 for Ute Mountain Reservation lands).

This permit offers NPDES permit coverage for stormwater discharges associated with industrial activity from the following areas in EPA Region 6:

Master Permit Number	Areas of Coverage/Where EPA Is Permitting Authority
LAR05I000	Indian country within the State of Louisiana
NMR050000	The State of New Mexico, except Indian country
NMR05I000	Indian country within the State of New Mexico, except Ute Mountain Reservation lands that are covered under Colorado permit COR05I000 and Navajo Reservation lands that are covered under Arizona permit AZR05I000
OKR05I000	Indian country within the State of Oklahoma
OKR05F000	Facilities in the State of Oklahoma not under the jurisdiction of the Oklahoma Department of Environmental Quality or the Oklahoma Department of Agriculture, Food and Forestry, except those on Indian Country. EPA jurisdiction facilities include SIC Codes 1311, 1381, 1382, 1389, and 5171.

Master Permit Number	Areas of Coverage/Where EPA Is Permitting Authority
TXR05F000	Facilities in the State of Texas not under the jurisdiction of the Texas Commission on Environmental Quality, except those on Indian Country. EPA-jurisdiction facilities include SIC Codes 1311, 1321, 1381, 1382, 1389, and 5171 (other than oil field service company "home base" facilities).
TXR05I000	Indian country within the State of Texas

For stormwater discharges in EPA Region 6 outside the areas of coverage identified above, please contact your state NPDES permitting authority to obtain coverage under a state-issued NPDES permit.

C.7 EPA Region 7: Iowa, Kansas, Missouri, Nebraska (except see Region 8 for Pine Ridge Reservation Lands).

This permit offer NPDES permit coverage for stormwater discharges associated with industrial activity from the following areas in EPA Region 7:

Master Permit Number	Areas of Coverage/Where EPA Is Permitting Authority
IAR05I000	Indian country within the State of Iowa
KSR05I000	Indian country within the State of Kansas
NER05I000	Indian country within the State of Nebraska, except Pine Ridge Reservation lands (see Region 8)

For stormwater discharges in EPA Region 7 outside the areas of coverage identified above, please contact your state NPDES permitting authority to obtain coverage under a state-issued NPDES permit.

C.8 EPA Region 8: Colorado, Montana, North Dakota, South Dakota, Wyoming, Utah (except see Region 9 for Goshute Reservation and Navajo Reservation Lands), the Ute Mountain Reservation in NM, and the Pine Ridge Reservation in NE.

This permit offers NPDES permit coverage for stormwater discharges associated with industrial activity from the following areas in EPA Region 8:

Master Permit Number	Areas of Coverage/Where EPA Is Permitting Authority
COR05F000	Areas in the State of Colorado, except those located on Indian country, subject to industrial activity by a Federal Operator
COR05I000	Indian country within the State of Colorado, as well as the portion of the Ute Mountain Reservation located in New Mexico
MTR05I000	Indian country within the State of Montana
NDR05I000	Indian country within the State of North Dakota, as well as that portion of the Standing Rock Reservation located in South Dakota (except for the portion of the lands within the former boundaries of the Lake Traverse Reservation, which is covered under South Dakota permit SDR05I000 listed below)

Master Permit Number	Areas of Coverage/Where EPA Is Permitting Authority
SDR05I000	Indian country within the State of South Dakota, as well as the portion of the Pine Ridge Reservation located in Nebraska and the portion of the lands within the former boundaries of the Lake Traverse Reservation located in North Dakota (except for the Standing Rock Reservation, which is covered under North Dakota permit NDR05I000 listed above)
UTR05I000	Indian country within the State of Utah, except Goshute and Navajo Reservation lands (see Region 9)
WYR05I000	Indian country within the State of Wyoming

For stormwater discharges in EPA Region 8 outside the areas of coverage identified above, please contact your state NPDES permitting authority to obtain coverage under a state-issued NPDES permit.

C.9 EPA Region 9: California, Hawaii, Nevada, Guam, American Samoa, the Commonwealth of the Northern Mariana Islands, the Confederated Tribes of the Goshute Reservation in Utah and Nevada, Indian Country within the State of Arizona including the Navajo Reservation in Utah and New Mexico and Arizona, the Duck Valley Reservation in Idaho, and the Fort McDermitt Reservation in Oregon.

This permit offers NPDES permit coverage for stormwater discharges associated with industrial activity from the following areas in EPA Region 9:

Master Permit Number	Areas of Coverage/Where EPA Is Permitting Authority
ASR050000	American Samoa
AZR05I000	Indian country within the State of Arizona, including Navajo Reservation lands in New Mexico and Utah
CAR05I000	Indian country within the State of California
GUR050000	Island of Guam
JAR050000	Johnston Atoll
MWR050000	Midway Island and Wake Island
MPR050000	Commonwealth of the Northern Mariana Islands
NVR05I000	Indian country within the State of Nevada, including the Duck Valley Reservation in Idaho, the Fort McDermitt Reservation in Oregon and the Confederated Tribes of the Goshute Reservation in Utah

For stormwater discharges in EPA Region 9 outside the areas of coverage identified above, please contact your state NPDES permitting authority to obtain coverage under a state-issued NPDES permit.

C.10 Region 10: Alaska, Idaho (except see Region 9 for Duck Valley Reservation lands), Oregon (except see Region 9 for Fort McDermitt Reservation), Washington.

This permit offers NPDES permit coverage for stormwater discharges associated with industrial activity from the following areas in EPA Region 10:

Master Permit Number	Areas of Coverage/Where EPA Is Permitting Authority
AKR05F000	Denali National Park and Preserve
AKR05I000	Indian country lands as defined in 18 U.S.C. 1151 within the State of Alaska
IDR050000	The State of Idaho, except Indian country lands
IDR05I000	Indian country lands within the State of Idaho, except Duck Valley Reservation lands, which are covered under Nevada permit NVR05I000
ORR05I000	Indian country lands within the State of Oregon, except Fort McDermitt Reservation lands, which are covered under Nevada permit NVR05I000
WAR05I000	Indian country lands within the State of Washington
WAR05F000	Areas in the State of Washington, except those located on Indian country lands, subject to industrial activity by a Federal Operator

For stormwater discharges in EPA Region 10 outside the areas of coverage identified above, please contact your state NPDES permitting authority to obtain coverage under a state-issued NPDES permit.

Appendix D - Facilities and Activities Covered

Your permit eligibility is limited to discharges from facilities in the "sectors" of industrial activity summarized in Table D-1. These sector descriptions are based on Standard Industrial Classification (SIC) Codes and Industrial Activity Codes. References to "sectors" in this permit (e.g., sector-specific monitoring requirements) refer to these groupings.

Table D-1. Sectors of Industrial Activity Covered by This Permit

Subsector (May be subject to more than one sector/subsector)	SIC Code or Activity Code[1]	Activity Represented
SECTOR A: TIMBER PRODUCTS		
A1	2421	General Sawmills and Planing Mills
A2	2491	Wood Preserving
A3	2411	Log Storage and Handling
A4	2426	Hardwood Dimension and Flooring Mills
	2429	Special Product Sawmills, Not Elsewhere Classified
	2431-2439 (except 2434)	Millwork, Veneer, Plywood, and Structural Wood (see Sector W)
	2448	Wood Pallets and Skids
	2449	Wood Containers, Not Elsewhere Classified
	2451, 2452	Wood Buildings and Mobile Homes
	2493	Reconstituted Wood Products
	2499	Wood Products, Not Elsewhere Classified
	2441	Nailed and Lock Corner Wood Boxes and Shook
SECTOR B: PAPER AND ALLIED PRODUCTS		
B1	2631	Paperboard Mills
B2	2611	Pulp Mills
	2621	Paper Mills
	2652-2657	Paperboard Containers and Boxes
	2671-2679	Converted Paper and Paperboard Products, Except Containers and Boxes
SECTOR C: CHEMICALS AND ALLIED PRODUCTS		
C1	2873-2879	Agricultural Chemicals
C2	2812-2819	Industrial Inorganic Chemicals
C3	2841-2844	Soaps, Detergents, and Cleaning Preparations; Perfumes, Cosmetics, and Other Toilet Preparations
C4	2821-2824	Plastics Materials and Synthetic Resins, Synthetic Rubber, Cellulosic and Other Manmade Fibers Except Glass

Table D-1. Sectors of Industrial Activity Covered by This Permit		
Subsector (May be subject to more than one sector/subsector)	**SIC Code or Activity Code[1]**	**Activity Represented**
C5	2833-2836	Medicinal Chemicals and Botanical Products; Pharmaceutical Preparations; in vitro and in vivo Diagnostic Substances; and Biological Products, Except Diagnostic Substances
	2851	Paints, Varnishes, Lacquers, Enamels, and Allied Products
	2861-2869	Industrial Organic Chemicals
	2891-2899	Miscellaneous Chemical Products
	3952 (limited to list of inks and paints)	Inks and Paints, Including China Painting Enamels, India Ink, Drawing Ink, Platinum Paints for Burnt Wood or Leather Work, Paints for China Painting, Artist's Paints and Artist's Watercolors
	2911	Petroleum Refining
SECTOR D: ASPHALT PAVING AND ROOFING MATERIALS AND LUBRICANTS		
D1	2951, 2952	Asphalt Paving and Roofing Materials
D2	2992, 2999	Miscellaneous Products of Petroleum and Coal
SECTOR E: GLASS, CLAY, CEMENT, CONCRETE, AND GYPSUM PRODUCTS		
E1	3251-3259	Structural Clay Products
	3261-3269	Pottery and Related Products
E2	3271-3275	Concrete, Gypsum, and Plaster Products
E3	3211	Flat Glass
	3221, 3229	Glass and Glassware, Pressed or Blown
	3231	Glass Products Made of Purchased Glass
	3241	Hydraulic Cement
	3281	Cut Stone and Stone Products
	3291-3299	Abrasive, Asbestos, and Miscellaneous Nonmetallic Mineral Products
SECTOR F: PRIMARY METALS		
F1	3312-3317	Steel Works, Blast Furnaces, and Rolling and Finishing Mills
F2	3321-3325	Iron and Steel Foundries
F3	3351-3357	Rolling, Drawing, and Extruding of Nonferrous Metals
F4	3363-3369	Nonferrous Foundries (Castings)
F5	3331-3339	Primary Smelting and Refining of Nonferrous Metals
	3341	Secondary Smelting and Refining of Nonferrous Metals
	3398, 3399	Miscellaneous Primary Metal Products

Table D-1. Sectors of Industrial Activity Covered by This Permit		
Subsector (May be subject to more than one sector/subsector)	**SIC Code or Activity Code[1]**	**Activity Represented**
SECTOR G: METAL MINING (ORE MINING AND DRESSING)		
G1	1021	Copper Ore and Mining Dressing Facilities
G2	1011	Iron Ores
	1021	Copper Ores
	1031	Lead and Zinc Ores
	1041, 1044	Gold and Silver Ores
	1061	Ferroalloy Ores, Except Vanadium
	1081	Metal Mining Services
	1094, 1099	Miscellaneous Metal Ores
SECTOR H: COAL MINES AND COAL MINING-RELATED FACILITIES		
H1	1221-1241	Coal Mines and Coal Mining-Related Facilities
SECTOR I: OIL AND GAS EXTRACTION		
I1	1311	Crude Petroleum and Natural Gas
	1321	Natural Gas Liquids
	1381-1389	Oil and Gas Field Services
SECTOR J: MINERAL MINING AND DRESSING		
J1	1442	Construction Sand and Gravel
	1446	Industrial Sand
J2	1411	Dimension Stone
	1422-1429	Crushed and Broken Stone, Including Rip Rap
	1481	Nonmetallic Minerals Services, Except Fuels
	1499	Miscellaneous Nonmetallic Minerals, Except Fuels
J3	1455, 1459	Clay, Ceramic, and Refractory Materials
	1474-1479	Chemical and Fertilizer Mineral Mining
SECTOR K: HAZARDOUS WASTE TREATMENT, STORAGE, OR DISPOSAL FACILITIES		
K1	HZ	Hazardous Waste Treatment, Storage, or Disposal Facilities, including those that are operating under interim status or a permit under subtitle C of RCRA
SECTOR L: LANDFILLS, LAND APPLICATION SITES, AND OPEN DUMPS		
L1	LF	All Landfill, Land Application Sites and Open Dumps
L2	LF	All Landfill, Land Application Sites and Open Dumps, except Municipal Solid Waste Landfill (MSWLF) Areas Closed in Accordance with 40 CFR 258.60
SECTOR M: AUTOMOBILE SALVAGE YARDS		
M1	5015	Automobile Salvage Yards

Table D-1. Sectors of Industrial Activity Covered by This Permit		
Subsector (May be subject to more than one sector/subsector)	**SIC Code or Activity Code[1]**	**Activity Represented**
SECTOR N: SCRAP RECYCLING FACILITIES		
N1	5093	Scrap Recycling and Waste Recycling Facilities except Source-Separated Recycling
N2	5093	Source-separated Recycling Facility
SECTOR O: STEAM ELECTRIC GENERATING FACILITIES		
O1	SE	Steam Electric Generating Facilities, including coal handling sites
SECTOR P: LAND TRANSPORTATION AND WAREHOUSING		
P1	4011, 4013	Railroad Transportation
	4111-4173	Local and Highway Passenger Transportation
	4212-4231	Motor Freight Transportation and Warehousing
	4311	United States Postal Service
	5171	Petroleum Bulk Stations and Terminals
SECTOR Q: WATER TRANSPORTATION		
Q1	4412-4499	Water Transportation Facilities
SECTOR R: SHIP AND BOAT BUILDING AND REPAIRING YARDS		
R1	3731, 3732	Ship and Boat Building or Repairing Yards
SECTOR S: AIR TRANSPORTATION FACILITIES		
S1	4512-4581	Air Transportation Facilities
SECTOR T: TREATMENT WORKS		
T1	TW	Treatment Works treating domestic sewage or any other sewage sludge or wastewater treatment device or system, used in the storage, treatment, recycling, and reclamation of municipal or domestic sewage, including land dedicated to the disposal of sewage sludge that are located within the confines of the facility, with a design flow of 1.0 mgd or more, or required to have an approved pretreatment program under 40 CFR Part 403. Not included are farm lands, domestic gardens or lands used for sludge management where sludge is beneficially reused and which are not physically located in the confines of the facility, or areas that are in compliance with section 405 of the CWA
SECTOR U: FOOD AND KINDRED PRODUCTS		
U1	2041-2048	Grain Mill Products
U2	2074-2079	Fats and Oils Products
U3	2011-2015	Meat Products
	2021-2026	Dairy Products

Table D-1. Sectors of Industrial Activity Covered by This Permit		
Subsector (May be subject to more than one sector/subsector)	**SIC Code or Activity Code[1]**	**Activity Represented**
	2032-2038	Canned, Frozen, and Preserved Fruits, Vegetables, and Food Specialties
	2051-2053	Bakery Products
	2061-2068	Sugar and Confectionery Products
	2082-2087	Beverages
	2091-2099	Miscellaneous Food Preparations and Kindred Products
	2111-2141	Tobacco Products
SECTOR V: TEXTILE MILLS, APPAREL, AND OTHER FABRIC PRODUCT MANUFACTURING; LEATHER AND LEATHER PRODUCTS		
V1	2211-2299	Textile Mill Products
	2311-2399	Apparel and Other Finished Products Made from Fabrics and Similar Materials
	3131-3199	Leather and Leather Products (note: see Sector Z1 for Leather Tanning and Finishing)
SECTOR W: FURNITURE AND FIXTURES		
W1	2434	Wood Kitchen Cabinets
	2511-2599	Furniture and Fixtures
SECTOR X: PRINTING AND PUBLISHING		
X1	2711-2796	Printing, Publishing, and Allied Industries
SECTOR Y: RUBBER, MISCELLANEOUS PLASTIC PRODUCTS, AND MISCELLANEOUS MANUFACTURING INDUSTRIES		
Y1	3011	Tires and Inner Tubes
	3021	Rubber and Plastics Footwear
	3052, 3053	Gaskets, Packing and Sealing Devices, and Rubber and Plastic Hoses and Belting
	3061, 3069	Fabricated Rubber Products, Not Elsewhere Classified
Y2	3081-3089	Miscellaneous Plastics Products
	3931	Musical Instruments
	3942-3949	Dolls, Toys, Games, and Sporting and Athletic Goods
	3951-3955 (except 3952 – see Sector C)	Pens, Pencils, and Other Artists' Materials
	3961, 3965	Costume Jewelry, Costume Novelties, Buttons, and Miscellaneous Notions, Except Precious Metal
	3991-3999	Miscellaneous Manufacturing Industries
SECTOR Z: LEATHER TANNING AND FINISHING		
Z1	3111	Leather Tanning and Finishing

Table D-1. Sectors of Industrial Activity Covered by This Permit		
Subsector (May be subject to more than one sector/subsector)	**SIC Code or Activity Code[1]**	**Activity Represented**
SECTOR AA: FABRICATED METAL PRODUCTS		
AA1	3411-3499 (except 3479)	Fabricated Metal Products, Except Machinery and Transportation Equipment, and Coating, Engraving, and Allied Services.
	3911-3915	Jewelry, Silverware, and Plated Ware
AA2	3479	Fabricated Metal Coating and Engraving
SECTOR AB: TRANSPORTATION EQUIPMENT, INDUSTRIAL OR COMMERCIAL MACHINERY		
AB1	3511-3599 (except 3571-3579)	Industrial and Commercial Machinery, Except Computer and Office Equipment (see Sector AC)
	3711-3799 (except 3731, 3732)	Transportation Equipment Except Ship and Boat Building and Repairing (see Sector R)
SECTOR AC: ELECTRONIC, ELECTRICAL, PHOTOGRAPHIC, AND OPTICAL GOODS		
AC1	3571-3579	Computer and Office Equipment
	3812-3873	Measuring, Analyzing, and Controlling Instruments; Photographic and Optical Goods, Watches, and Clocks
	3612-3699	Electronic and Electrical Equipment and Components, Except Computer Equipment
SECTOR AD: NON-CLASSIFIED FACILITIES		
AD1	Other stormwater discharges designated by the Director as needing a permit (see 40 CFR 122.26(a)(9)(i)(C) & (D)) or any facility discharging stormwater associated with industrial activity not described by any of Sectors A-AC. NOTE: Facilities may not elect to be covered under Sector AD. Only the Director may assign a facility to Sector AD.	

[1] A complete list of SIC Codes (and conversions from the newer North American Industry Classification System" (NAICS)) can be obtained from the Internet at www.census.gov/epcd/www/naics.html or in paper form from various locations in the document titled *Handbook of Standard Industrial Classifications*, Office of Management and Budget, 1987.

Appendix E - Procedures Relating to Endangered Species Protection

E.1 Assessing the Effects of Your Discharges and Discharge-Related Activities

You must follow the procedures in this appendix to determine which of the eligibility criteria in Part 1.1.4.5 (i.e., criterion A - E), if any, you qualify under, by assessing the potential effects of applicable stormwater discharges, discharge-related activities, and allowable non-stormwater discharges on listed threatened and endangered species and their designated critical habitat. In accordance with Part 5.2.6.1 of this permit, you must keep any documentation that supports your eligibilty determination, including the completed *Criterion Selection Worksheet* in Part E.4 of this appendix, with your Stormwater Pollution Prevention Plan (SWPPP). You must complete your eligibility determination prior to submitting your Notice of Intent (NOI) for coverage under the MSGP, and must provide all information as required on your NOI form that supports the Part 1.1.4.5 eligibility criterion you qualify under. **Note that if you have determined that you may be eligible under criterion C, you must submit a completed *Criterion C Eligibility Form* to EPA a minimum of 30 days prior to submitting your NOI for permit coverage.**

When evaluating the potential effects of your activities, you must consider effects to listed species or critical habitats within the "action area" of your industrial activity. Action area is defined in Appendix A of the MSGP as all areas to be affected directly or indirectly by the federal action and not merely the immediate area involved in the action. This includes areas beyond the footprint of the facility that are likely to be affected by stormwater discharges, discharge-related activities, and allowable non-stormwater discharges. For example, discharges of pollutants into downstream areas can increase the "action area" beyond the footprint of the facility.

E.2 Eligibility Criterion

As required by Part 1.1.4.5, you must meet one or more of the following five criteria (A - E) to be eligible for coverage under the permit:

Criterion A. No federally listed threatened or endangered species or their designated critical habitat(s) are likely to occur in the "action area" as defined in Appendix A. To certify your eligibility under this criterion, you must use the *Criterion Selection Worksheet* in Part E.4 of Appendix E. You must also provide a description of the basis for the criterion you selected on your NOI form and provide documentation supporting your eligibility determination in your SWPPP.

Criterion B. Your industrial activity's discharges and discharge-related activities were already addressed in another operator's valid certification of eligibility for your action area under this permit and there is no reason to believe that federally listed species or designated critical habitat not considered in the prior certification may be present or located in the "action area" (e.g., due to a new species listing or critical habitat designation). To certify your eligibility under this criterion, you must use the *Criterion Selection Worksheet* in Part E.4 of Appendix E. There must be no lapse of NPDES permit coverage in the other operator's certification. You must also comply with any additional measures that formed the basis of the other operator's valid certification of eligibility to ensure that your discharges and discharge-related activities are protective of listed species and/or critical habitat. You must include in your NOI the NPDES ID (i.e., permit tracking number) assigned to the other operator's authorization under this permit, and a description of the basis for the criterion selected on your NOI form, including the eligibility criterion selected by the

other operator's certification. You must also provide any documentation in your SWPPP that supports the other operator's eligibility determination, including any additional measures that formed the basis of the other operator's eligibility determination.

Criterion C. Federally listed threatened or endangered species or their designated critical habitat(s) are likely to occur in or near your facility's "action area," and your industrial activity's discharges and discharge-related activities are not likely to adversely affect listed threatened or endangered species or critical habitat. To certify your eligibility under this criterion, you must use the *Criterion Selection Worksheet* in Part E.4 of Appendix E, including completion of the *Criterion C Eligibility Form*, which you must submit to EPA at least 30 days prior to filing your NOI for permit coverage. After evaluation of your *Criterion C Eligibility Form*, EPA may require additional measures that you must implement to avoid or eliminate likely adverse effects on listed species and critical habitat from discharges and discharge-related activities. You may submit your NOI for permit coverage 30 days after submitting to EPA your completed *Criterion C Eligibility Form*. You must also provide a description of the basis for the criterion you selected on your NOI form and provide documentation supporting your eligibility determination in your SWPPP.

Criterion D. Consultation between a Federal Agency and the U.S. Fish and Wildlife Service and/or the National Marine Fisheries Service under section 7 of the Endangered Species Act (ESA) has been concluded. Consultations can be either formal or informal, and would have occurred only as a result of a separate federal action (e.g., during application for an individual wastewater discharge permit or the issuance of a wetlands dredge and fill permit), and consultation must have addressed the effects of the industrial activity's discharges and discharge-related activities on all federally listed threatened or endangered species and federally designated critical habitat. The result of this consultation must be one of the following:

i. A biological opinion that concludes that the action in question (taking into account the effects of your facility's discharges and discharge-related activities) is not likely to jeopardize the continued existence of listed species, or result in the destruction or adverse modification of critical habitat;

ii. A biological opinion that concludes that the action is likely to jeopardize listed species or to result in the destruction or adverse modification of critical habitat, and any recommended reasonable and prudent alternatives or reasonable and prudent measures are being implemented; or

iii. Written concurrence from the applicable Service(s) with a finding that your facility's discharges and discharge-related activities are not likely to adversely affect listed species or critical habitat.

To certify your eligibility under this criterion, you must use the *Criterion Selection Worksheet* in Part E.4 of Appendix E. You must verify that the consultation does not warrant reinitiation under 50 CFR §402.16. If reinitiation of consultation is required, in order to be eligible under this criterion you must ensure consultation is reinitiated and the result of the consultation must be consistent with (i), (ii), or (iii) above.

If eligible, you must also provide supporting documentation for your determination in your NOI and SWPPP, including the Biological Opinion (or PCTS tracking number) or concurrence letter.

Criterion E. Your industrial activities are the subject of a permit under section 10 of the ESA, and this authorization addresses the effects of your facility's discharges and discharge-related activities on federally listed species and designated critical habitat. To certify your eligibility under this criterion, you must use the *Criterion Selection Worksheet* in Part E.4 of Appendix E. You must also provide supporting documentation for your determination in your NOI and SWPPP, including a copy of the permit from the Services.

E.3 Eligibility Compliance

You must comply with any measures that formed the basis of your eligibility determination in Part 1.1.4.5 for the duration of your coverage under the MSGP in order to maintain your eligibility for coverage under the permit. These measures become permit requirements per Part 2.3. Documentation of these measures must be kept as part of your SWPPP (see Part 5.2.6.1).

E.4 Criterion Selection Worksheet

Instructions:

You must follow the step-by-step instructions in this worksheet in order to determine your eligibility under the Part 1.1.4.5 criteria. Alternatively, if you prefer to use a Biological Evaluation (or its equivalent) in making a determination of your eligibility, you should ensure all of the information requested below for the criterion you are selecting is fully addressed in such a document. You must attach this completed document or Biological Evaluation (or equivalent) to your SWPPP to support your Part 1.1.4.5 eligibility determination.

You may need the following information in order to determine your eligibility:

1) Your facility's draft Stormwater Pollution Prevention Plan (SWPPP), including information on receiving waters.
2) Any additional site-specific information related to your facility's discharges and discharge-related activities.
3) The list(s) of endangered and threatened species and any designated critical habitat in your action area, as acquired from the Fish and Wildlife Service and/or the National Marine Fisheries Services. Directions on how to acquire species lists is described in a subsequent section below.

Note that much of the information needed to complete this worksheet is also needed in order to prepare your NOI for permit coverage, and is also information that you must develop as part of your SWPPP. You may copy and paste any information that is already required and completed in your SWPPP into this worksheet. (*You may also decide to make minor changes or additions to your SWPPP while filling out the worksheet for clarification purposes or to address any concerns that are identified below.)*

STEP 1: DETERMINE IF THE ELIGIBILITY REQUIREMENTS OF CRITERION B, D, OR E CAN BE MET.

A. You should first determine whether you are eligible under criterion B (because another operator has accounted for your action area in their valid certification of eligibility under the 2015 MSGP), criterion D (because of a previously completed ESA section 7 consultation), or criterion E (because of a previously issued ESA section 10 permit).

B. If your facility is likely to be eligible under criterion B, D or E, you may skip ahead to the applicable criterion's requirements to determine if you are eligible. If after completing the relevant section you find that your facility does not in fact meet criteria B, D, or E (e.g., due to difference in action area described, lack of analysis of appropriate effects, new listings or designation of critical habitat), proceed to Step 2 below.

C. If your facility is not likely to be eligible under criterion B, D or E, you may proceed directly to Step 2.

Criterion B Eligibility Requirements

If your industrial activities were already addressed in another operator's valid certification of eligibility under the current 2015 MSGP, you may be eligible for coverage under criterion B. In order to be eligible for coverage under criterion B, you must confirm that all the following are true:

☐ You have confirmed that the other operator's certification of eligibility accounted for your action area and that the eligibility determination was valid.

☐ There has been no lapse of NPDES permit coverage in the other operator's certification.

☐ You will comply with all measures that formed the basis of the other operator's valid certification of eligibility. List any measures here (or enter "N/A" if none exist):

- **If all of the above are true, you may select criterion B on your NOI.** You must include in your NOI the NPDES ID assigned to the other operator's authorization under this permit, and a description of the basis for the criterion selected on your NOI form, including the eligibility criterion selected by the other operator's certification. You must include this completed worksheet in your SWPPP.
- **If any of the above are not true, you may not select criterion B and must proceed to Step 2.** For example, if there are any listed species in your action area that were not addressed in the other operator's certification, you are not eligible under criterion B.

Criterion D Eligibility Requirements

If consultation under section 7 of the ESA has been concluded, you may be eligible for coverage under criterion D. In order to be eligible or coverage under criterion D, you must confirm that all the following are true:

☐ A consultation between a federal agency and the U.S. Fish and Wildlife Service and/or the National Marine Fisheries Service under section 7 of the ESA has been concluded. Consultations can be either formal or informal, and would have occurred only as a result of a separate federal action (e.g., during application for an individual wastewater discharge permit or the issuance of a wetlands dredge and fill permit), and the consultation must have addressed the effects of your industrial activity's discharges and discharge-related activities on all federally listed threatened or endangered species and all designated critical habitat in your action area. The result of this consultation must be either:

i. A biological opinion that concludes that the action in question (taking into account the effects of your facility's discharges and discharge-related activities) is not likely to jeopardize the continued existence of listed species, or result in the destruction or adverse modification of critical habitat. The biological opinion must have included the effects of your facility's discharges[a] and discharge-related activities on all the listed species and designated critical habitat in your action area;

ii. A biological opinion that concludes that the action is likely to jeopardize listed species or to result in the destruction or adverse modification of critical habitat, and any recommended reasonable and prudent alternatives or reasonable and prudent measures are being implemented; or

iii. Written concurrence (e.g., letter of concurrence) from the applicable Service(s) with a finding that concludes that your facility's discharges and discharge-related activities are not likely to adversely affect listed species or designated critical habitat. The concurrence letter must have included the effects of your facility's discharges and discharge-related activities on all the listed species and designated critical habitat on your species list(s) acquired from the Service(s) as part of this worksheet.

☐ The consultation does not warrant reinitiation under 50 CFR §402.16; or, if reinitiation of consultation is required (e.g., due to a new species listing or critical habitat designation; new information), you have reinitiated the cosultation and the result of the consultation is consistent with the statements above. Attach a copy of any reinitiation documentation from the Services or other consulting federal agency.

- **If all of the above are true, you may select criterion D on your NOI.** You must also provide a description of the basis for the criterion selected on your NOI form and you must include this completed worksheet in your SWPPP. In both your SWPPP and NOI you must also provide the Biological Opinion (or PCTS tracking number) or concurrence letter and any other documentation supporting your eligibility determination.
- **If any of the above are not true, you may not select criterion D and must proceed to Step 2.** For example, if the biological opinion or written concurrence did not include the effects of the discharge or discharge-related activities as described above (e.g., the previous consultation covered some but not all of the species or critical habitat in your action area as shown on your species list), or if the consultation is no longer valid (e.g., due to new species listings), you are not eligible under criterion D.

Criterion E Eligibility Requirements

If your industrial activities are the subject of a permit under section 10 of the ESA, and this authorization addresses the effects of your facility's discharges and discharge-related activities on federally listed species and designated critical habitat in your action area, you may be eligible for coverage under criterion E. In order to be eligible or coverage under criterion E, you must confirm that the following is true:

☐ A permit has been issued under section 10 of the ESA. The permit authorization specifically addresses the effects of your facility's discharges and discharge-related activities (if applicable) on all federally-listed species and designated critical habitat in your action area.

[a] Effects of discharge includes, but is not limited to, the analysis of the hydrological, chemical, and biological effects of the discharge on listed species, their prey, and their habitat, as well as critical habitat, where designated. For example, the effects analysis would have evaluated whether the various pollutants in the discharge (e.g., TSS, metals) would adversely affect listed species through exposure to the pollutants, or to their prey or habitat. Effects that look only at short-term effects unrelated to the stormwater discharge effects to listed species are not sufficient for these purposes.

- **If the above is true, you may select criterion E on your NOI.** You must also provide a description of the basis for the criterion selected on your NOI form and must include this completed worksheet in your SWPPP. In both your SWPPP and your NOI you must provide a copy of the section 10 permit issued by the Services.
- **If the above is not true, you may not select criterion E and must proceed to Step 2.** For example, if a permit has been issued under section 10 of the ESA, but the permit authorization did not address the effects of your facility's discharges and/or discharge-related activities on all federally-listed species and designated critical habitat in your action area, you are not eligible under criterion E, but you should attach a copy of the permit to the SWPPP for reference.

STEP 2: DETERMINE THE EXTENT OF YOUR ACTION AREA

You must determine whether species listed as either threatened or endangered, or their critical habitat(s) (see definitions of these terms in Appendix A), are located in your facility's action area (i.e., all areas to be affected directly or indirectly by the federal action and not merely the immediate area involved in the action, including areas beyond the footprint of the facility that are likely to be affected by stormwater discharges, discharge-related activities, and allowable non-stormwater discharges). Consider the following in determining the action area for your facility:

- Discharges of pollutants into downstream areas can expand the action area well beyond the footprint of your facility and the discharge point(s). Take into account the controls you will be implementing to minimize pollutants and the receiving waterbody characteristics (e.g., perennial, intermittent, ephemeral) in determining the extent of physical, chemical, and/or biotic effects of the discharges. All receiving waterbodies that could receive pollutants from your facility must be included in your action area.
- Discharge-related activities must also be accounted for in determining your action area. Discharge-related activities are any activities that cause, contribute to, or result in stormwater and allowable non-stormwater point source discharges, and measures such as the siting, construction, and operation of stormwater controls to control, reduce, or prevent pollutants from being discharged. For example, any new or modified stormwater controls that will have noise or other similar effects, and any disturbances associated with construction of controls, are part of your action area.

If you have any questions about determining the extent of your action area, you may contact EPA or the Services for assistance.

You must include a map **and a written description of** the action area of your facility in Attachment 1 of this appendix. You may choose to include the map that is generated from the FWS' on-line mapping tool IPaC (the *Information, Planning, and Consultation System*) located at http://ecos.fws.gov/ipac/ (see Step 3 for information about using this tool).

You must proceed to Step 3 below.

STEP 3: DETERMINE IF LISTED THREATENED OR ENDANGERED SPECIES AND/OR CRITICAL HABITAT ARE PRESENT IN YOUR ACTION AREA.

You must determine whether species listed as either threatened or endangered under the Endangered Species Act (ESA), and/or their designated critical habitat(s)[b], are located in your facility's action area. Federally listed species and designated critical habitat are under the purview of the National Marine Fisheries Service (NMFS) and the U.S. Fish and Wildlife Service (FWS) (together, "Services"), and in many cases, species and critical habitat lists will need to be acquired from both Services.

[b] See definitions of these terms in Appendix A of the MSGP.

- For NMFS species and critical habitat information, use the following webpages, which provide up-to-date information on listed species (http://www.nmfs.noaa.gov/pr/species/esa/) and critical habitat (http://www.nmfs.noaa.gov/pr/species/criticalhabitat.htm). To determine the field office that corresponds to your facility, go to http://www.nmfs.noaa.gov/ (under the left tab for "Regions"). For NMFS species in the Greater Atlantic Region, go to http://www.greateratlantic.fisheries.noaa.gov/protected/section7/guidence/maps/index.html.
- For FWS species information, use the on-line mapping tool IPaC (the *Information, Planning, and Consultation System*) located at http://ecos.fws.gov/ipac/, and follow these steps:
  - *Select Get Started*.
  - Select Enter Project Location
  - Use an address, city name or other location to zoom into your project area
  - Use the zoom feature to see the entire extent of your action area on the screen.
  - Use one of the mapping features (e.g., Polygon or line feature) to draw your action.
    - For the aquatic portion of your action area, trace the waterbody(ies) with the tool to characterize your action area.
    - If your proposal will include any upland activities (i.e., discharge-related activities), or if there is some aspect of your discharge that would potentially result in effects to terrestrial species, include the corresponding upland areas within your action area.
    - When you are done, press *Continue*.
  - Select Request an Official Species List
  - Complete the fields on the Official Species List Request page, and include "(MSGP)" at the end of the project description.
    - For Classification, select "Water Quality Modification".
    - Select the appropriate requesting agency/organization type (for most applicants, this should be "Other").
  - Submit the request to acquire an Official Species List, which should show both listed species as well as any designated critical habitat that are present in the action area in the previous step.
  - Note: *If a link to an Official Species List is not available on the page, follow the web link of the office(s) indicated, or contact the office directly by mail or phone if a web link is not shown*.

The principle authority for critical habitat designations and associated requirementsis found at 50 CFR Parts 17 and 226. See http://www.access.gpo.gov.

Attach a copy of the species and critical habitat list(s) from the Service(s) to Attachment 2 of this appendix and use the list(s) to complete the rest of this worksheet. For FWS species, include the full printout from your IPaC query/Official Species List in Attachment 2. You can include the map from your IPaC query in Attachment 1.

If after following the steps you have determined that there are no listed species and/or designated critical habitat in your action area, you may be eligible for coverage under criterion A.

If you have determined that there are or may be listed species and/or designated critical habitat in your action area, you are not eligible under criterion A and must proceed to Step 4 below.

Criterion A Eligibility Requirements

In order to be eligible for coverage under criterion A, you must confirm that the following is true:

☐ I have confirmed there to be no listed species and no critical habitat in my action area.

- **If the above is true, you may select criterion A on your NOI form.** You must also provide a description of the basis for the criterion selected on your NOI form. You must include this completed worksheet in your SWPPP. *Note: If your Official Species List from the USFWS indicated no species or critical habitat were present in your action area, include the full consultation tracking code at the top of your Official Species List in your NOI submittal in the question "Provide a brief summary of the basis for the criterion selected in Appendix E." If an Official Species List was not available on IPaC, list the contact date and name of the Service staff with whom you corresponded to verify no USFWS species or critical habitat were present in your action area.*
- If the above is not true, you may not select criterion A and must proceed to **Step 4** to determine if you can become eligible under criterion C.

Note: For existing dischargers that have previously obtained coverage under criterion A, you must verify whether listed species and/or critical habitat are expected to exist in your action area, as described above. Please note that if you now find that your action area overlaps with listed species or critical habitat, you must proceed to Step 4.

STEP 4: DETERMINE IF YOUR INDUSTRIAL FACILITY'S DISCHARGES OR DISCHARGE-RELATED ACTIVITIES ARE LIKELY TO ADVERSELY AFFECT LISTED THREATENED OR ENDANGERED SPECIES OR DESIGNATED CRITICAL HABITAT AND ANY MEASURES THAT MUST BE IMPLEMENTED TO AVOID ADVERSE EFFECTS

If in Step 3 you determined that listed species and/or designated critical habitat could exist in your action area, you must next assess whether your discharges and discharge-related activities are likely to adversely affect listed threatened or endangered species or designated critical habitat, and whether any additional measures are necessary to ensure no likely adverse effects. In order to make a determination of your facility's likelihood of adverse effects, you must complete the attached *Criterion C Eligibility Form* and must submit this form to EPA a minimum of 30 days prior to filing your NOI for permit coverage. After you submit your *Criterion C Eligibility Form*, you may be contacted by EPA with additional measures that you must implement in order to ensure your eligibililty under criterion C.

Criterion C Eligibility Form

Instructions:

In order to be eligible for coverage under criterion C, you must complete the following form and you must submit it to EPA following the instructions in Section VII a **minimum of 30 days prior to filing your NOI for permit coverage.** After you submit your form, you may be contacted by EPA with additional measures (e.g., additional stormwater controls or modifications to your discharge-related activities) that you must implement in order to ensure your eligibility under criterion C.

If after completing this worksheet you cannot make a determination that your discharges and discharge-related activities are not likely to adversely affect listed threatened or endangered species or designated critical habitat, you must submit this completed worksheet to EPA, and you may not file your NOI for permit coverage until you receive a determination from EPA that your discharges and/or discharge-related activities are not likely to adversely affect listed species and critical habitat.

Note: Much of the information needed for this form can be obtained from your draft SWPPP which will be needed when you file your NOI.

SECTION I. OPERATOR, FACILITY, AND SITE LOCATION INFORMATION.

1) Operator Information

a) Operator Name: _____

b) Point of Contact

First Name: _____ **Last Name:** _____

Phone Number: _____

E-mail: _____

2) Facility Information

a) Facility Name: _____

b) Check which of the following applies:

☐ I am seeking coverage under the MSGP as a new discharger or as a new source

☐ I am seeking coverage under the MSGP as an existing discharger and my facility has modifications to its discharge characteristics (e.g., changes in discharge flow or area drained, different pollutants) and/or discharge-related activities (e.g., stormwater controls)

Indicate the number of years the facility has been in operation: _____ years

Provide your NPDES ID (i.e., permit tracking number) from your previous MSGP coverage: _____

☐ I am seeking coverage under the MSGP as an existing discharger and there are no modifications to my facility.

Indicate the number of year the facility has been in operation: _____ years

Provide your NPDES ID (i.e., permit tracking number) from your previous MSGP coverage: _____

c) **Facility Address:**

Address 1: _____

Address 2: _____

City: _____ **State:** _____ **Zip Code:** _____

d) **Identify the primary industrial sector to be covered under the 2015 MSGP:**

SIC Code _____ or Primary Activity Code _____

Sector _____ and Subsector _____

e) **Identify the sectors of any co-located activities to be covered under the 201r MSGP:**

Sector _____ Subsector _____

Sector _____ Subsector _____

Sector _____ Subsector _____

Sector _____ Subsector _____

Sector _____ Subsector _____

Sector _____ Subsector _____

f) **Estimated area of industrial activity exposed to stormwater:** _____ **acres**

g) **Provide a general description of the industrial activities that are taking place at this facility:**

3) **<u>Receiving Waters Information</u>**

List all the stormwater outfalls from your facility.				**For each outfall, provide the following receiving water information:**	
Outfall ID	**Design Capacity (if known)**	**Latitude (decimal degrees)**	**Longitude (decimal degrees)**	**Name of the receiving water that receives stormwater from the outfall and/or from the MS4 that the outfall discharges to**	**Type of Waterbody (e.g., lake, pond, river/stream/creek, estuarine/marine water)**
		_ _ _ . _ _ _ _	_ _ _ . _ _ _ _		
		_ _ _ . _ _ _ _	_ _ _ . _ _ _ _		
		_ _ _ . _ _ _ _	_ _ _ . _ _ _ _		
		_ _ _ . _ _ _ _	_ _ _ . _ _ _ _		
		_ _ _ . _ _ _ _	_ _ _ . _ _ _ _		

SECTION II. ACTION AREA

Ensure that your action area is described in Attachment 1, as required in Step 2.

SECTION III. LISTED SPECIES AND CRITICAL HABITAT LIST

Ensure that the listed species and critical habitat list is included in Attachment 2, as required in Step 3.

Review your species list in Attachment 2, choose one of the following three statements, and follow the corresponding instructions:

☐ The species list includes only terrestrial species and/or their designated critical habitat. No aquatic or aquatic-dependent species or their critical habitat are present in the action area. **You may skip to Section IV of this form. You are not required to fill out Section V.**

> ***Note:*** For the purposes of this permit, "terrestrial species" would not include animal or plant species that 1) spends any portion of its life cycle in a waterbody or wetland, or 2) if an animal, depends on prey or habitat that occurs in a waterbody or wetland. For example, shorebirds, wading birds, amphibians, and certain reptiles would not be considered terrestrial species under this definition. Please also be aware that some terrestrial animals (e.g., certain insects, amphibians) may have an aquatic egg or larval/juvenile phase.

☐ The species list includes only aquatic and/or aquatic-dependent species and/or their designated critical habitat. No terrestrial species or their critical habitat are present in the action area. **You may skip to Section V of this form and are not required to fill out Section IV.**

☐ The species list includes both terrestrial and aquatic or aquatic-dependent species and/or their designated critical habitat. **You must fill out both Sections IV and V of this form.**

SECTION IV. EVALUATION OF DISCHARGE-RELATED ACTIVITIES EFFECTS

Note: You are only required to fill out this section if your facility's action area contains terrestrial species and/or their designated critical habitat. If your action area only contains aquatic and/or aquatic-dependent species and/or their designated critical habitat, you can skip directly to Section V.

Most of the potential effects related to coverage under the MSGP are assumed to occur to aquatic and/or aquatic-dependent species. However, in some cases, potential effects to terrestrial species and/or their critical habitat should be considered as well from any discharge-related activities that occur during coverage under the MSGP. Examples of discharge-related activities that could have potential effects on listed terrestrial species or their critical habitat include the storage of materials and land disturbances associated with stormwater management-related activities (e.g., the installation or placement of stormwater control measures).

A. Select the applicable statement(s) below and follow the corresponding instructions:

☐ There are no discharge-related activities that are planned to occur during my coverage under the MSGP. You can conclude that your discharge-related activities will have no likely adverse effects, and:

- If there are any aquatic or aquatic-dependent species and/or their critical habitat in your action area, you must skip to Section V, *Evaluation of Discharge Effects,* below.
- If there are no aquatic or aquatic-dependent species you may skip to Section VI and verify that your activities will have no likely adverse effects. You must submit this form to EPA as specified in Section VII of this form. You may select criterion C on your NOI form and may submit your NOI for permit coverage 30 days after you have submitted this *Criterion C Eligibility Form*. You must also provide a description of the basis for the criterion you selected on your NOI form, **including the species and critical habitat list(s) in your action area**, as well as any other documentation supporting your eligibility. You must also include this completed *Criterion C Eligiblity Form* in your SWPPP.

☐ There are discharge-related activities planned as part of the proposal. Describe your discharge-related activities in the following box and continue to (b) below.

Describe discharge-related activities:

B. In order to ensure any discharge-related activities will have no likely adverse effects on listed species and/or their designated critical habitat, you must certify that all the following are true:

☐ Discharge-related activities will occur:

- on previously cleared/developed areas of the site where maintenance and operation of the facility are currently occurring or where existing conditions of the area(s) in which the discharge-related activities will occur precludes its use by listed species (e.g., work on existing impervious surfaces, work occurring inside buildings, area is not used by species), and
- if discharge-related activities will include the establishment of structures (including, but not limited to, infiltration ponds and other controls) or any related disturbances, these structures and/or disturbances will be sited in areas that will not result in isolation or degradation of nesting, breeding, or foraging habitat or other habitat functions for listed animal species (or their designated critical habitat), and will avoid the destruction of native vegetation (including listed plant species).

☐ If vegetation removal (e.g., brush clearing) or other similar activities will occur, no terrestrial listed species that use these areas for habitat would be expected to be present during vegetation removal.

If all the above are true, you can conclude that your discharge-related activities will have no likely adverse effects, and:

- If there are any aquatic or aquatic-dependent species and/or critical habitat in your action area, you must skip to Section V, *Evaluation of Discharge Effects,* below.
- If there are no aquatic or aquatic-dependent species you may skip to Section VI and verify that your activities will have no likely adverse effects. You must submit this form to EPA as specified in Section VII of this form. You may select criterion C on your NOI and may submit your NOI for permit coverage 30 days after you have submitted this completed form. You must also provide a description of the basis for the criterion you selected on your NOI form, **including the species and critical habitat list(s)**, and any other documentation supporting your eligibility. You must also include this completed *Criterion C Eligibility Form* in your SWPPP.
- **If any of the above are not true**, you cannot conclude that your discharge-related activities will have no likely adverse effects. You must complete the rest of this form (if applicable), and must submit the form to EPA for assistance in determining your eligibility for coverage.

SECTION V. EVALUATION OF DISCHARGE EFFECTS

Note: *You are only required to fill out this section if your facility's action area includes aquatic and/or aquatic-dependent species and/or their critical habitat.*

In this section, you will evaluate the likelihood of adverse effects from your facility's discharges. The scope of effects to consider will vary with each facility and species/critical habitat characteristics. The following are examples of discharge effects you should consider:

- *Hydrological Effects.* Stormwater discharges may adversely affect receiving waters from pollutant parameters such as turbidity, temperature, salinity, or pH. These effects will vary with the amount of stormwater discharged and the volume and condition of the receiving water. Where a stormwater discharge constitutes a minute portion of the total volume of the receiving water, adverse hydrological effects are less likely.
- *Toxicity of Pollutants.* Pollutants in stormwater may have toxic effects on listed species and may adversely affect critical habitat. Exceedances of benchmarks, effluent limitation guidelines, or state or tribal water quality requirements may be indicative of potential adverse effects on listed species or critical habitat. However, some listed species may be adversely affected at pollutant concentrations below benchmarks, effluent limitation guidelines, and state or tribal water quality standards. In addition, stormwater pollutants identified in Part 5.2.3.2 of your SWPPP, but not monitored as benchmarks or effluent limitation guidelines, may also adversely affect listed species and critical habitat.

As these effects are difficult to analyze for listed species, their prey, habitat, and designated critical habitat, this form helps you to analyze your discharges and make a determination of whether your discharges will have likely adverse effects and whether there are any additional controls you can implement to ensure no likely adverse effects.

A. Evaluation of Pollutants and Controls to Avoid Adverse Effects. In this section, you must document all of your pollutant sources and pollutants expected to be discharged in stormwater. You must also document the controls you will implement to avoid adverse effects on listed aquatic and aquatic-dependent species. You must include specific details about the expected effectiveness of the controls in avoiding adverse effects to the listed aquatic-and aquatic-dependent species. Attach additional pages if needed.

Potential Pollutant Source	Potential Pollutants	**Controls to Avoid Adverse Effects on Listed Aquatic and Aquatic-Dependent Species.** Include information supporting why the control(s) will ensure no adverse effects, including any data you have about the effectiveness of the control(s) in reducing pollutant concentrations. You may also attach photos of your controls to this form.
***e.g.,* vehicle and equipment fueling**	***e.g.,*** • **Oil & grease** • **Diesel** • **Gasoline** • **TSS** • **Antifreeze**	***e.g.,*** • **Fueling operators (including the transfer of fuel from tank trucks) will be conducted on an impervious or contained pad or under cover** • **Drip pans will be used where leaks or spills of fuel can occur and where making and breaking hose connections** • **Spill kit will be kept on-site in close proximity to potential spill areas** • **Any spills will be cleaned-up immediately using dry clean up methods** • **Stormwater runoff will be diverted around fueling areas using diversion dikes and curbing**

Potential Pollutant Source	Potential Pollutants	Controls to Avoid Adverse Effects on Listed Aquatic and Aquatic-Dependent Species.

Potential Pollutant Source	Potential Pollutants	Controls to Avoid Adverse Effects on Listed Aquatic and Aquatic-Dependent Species.

☐ Check if you are not able to make a preliminary determination that any of your pollutants will be controlled to a level necessary to avoid adverse effects on aquatic and/or aquatic-dependent listed species and their designated critical habitat. You must check in Section VI that you are unable to make a determination of no likely adverse effects, and must complete the rest of the form. You must submit your completed form to EPA for assistance in determining your eligibility for coverage.

B. Analysis of Effects Based on Past Monitoring Data. Select which of the following applies to your facility:

☐ I have no previous monitoring data for my facility because there are no applicable monitoring requirements for my facility's sector(s).

☐ I have no previous monitoring data for my facility because I am a new discharger or a new source, but I am subject to monitoring under the 2015 MSGP. You must provide information to support a conclusion that your facility's discharges are not expected to result in benchmark or numeric effluent limit exceedances that will adversely affect listed species or their critical habitat:

☐ My facility has not had any exceedances under the 2008 MSGP of any required benchmark(s) or numeric effluent limits.

☐ My facility has had exceedances of one or more benchmark(s) or numeric effluent limits under the 2008 MSGP, but I have addressed them during my coverage under the 2008 MSGP, or in my evaluation of controls to avoid adverse effects in (A) above. Describe all actions (including specific controls) that you will implement to ensure that the pollutants in your discharge(s) will not result in likely adverse effects from future exceedances.

☐ Check if your facility has had exceedances of one or more benchmarks or numeric effluent limits under the 2008 MSGP and you have not been able to address them to avoid adverse effects from future exceedances, or if you are a new discharger or a new source but you are not sure if you can avoid adverse effects from possible exceedances. You must check in Section VI that you are unable to make a determination of no likely adverse effects. You must submit your completed form to EPA for assistance in determining your eligibility for coverage. You may not file your NOI for permit coverage until you are able to make a determination that your discharges will avoid adverse effects on listed species and designated critical habitat.

SECTION VI VERIFICATION OF PRELIMINARY EFFECTS DETERMINATION

Based on Steps I – V of this form, you must verify your preliminary determination of effects on listed species and designated critical habitat from your discharges and/or discharge-related activities :

☐ Following the applicable Steps in I – V above, I have made a preliminary determination that my discharges and/or discharge-related activities are not likely to adversely affect listed species and designated critical habitats.

☐ Following the applicable Steps in I – V above, I am **not** able to make a preliminary determination that my discharges and/or discharge-related activities are not likely to adversely affect listed species and designated critical habitats.

Certification Information

I certify under penalty of law that this document and all attachments were prepared under my direction or supervision in accordance with a system designed to assure that qualified personnel properly gathered and evaluated the information submitted. Based on my inquiry of the person or persons who manage the system, or those persons directly responsible for gathering the information, the information submitted is, to the best of my knowledge and belief, true, accurate, and complete.

I am aware that there are significant penalties for submitting false information, including the possibility of fine and imprisonment for knowing violations.

First Name, Middle Initial, Last Name:

Title:

Signature: _____ Date: / /

E-mail:

SECTION VII CRITERION C ELIGIBILITY FORM SUBMISSION INSTRUCTIONS

You must submit this completed form to EPA at msgpesa@epa.gov, including any attachments and any additional information that demonstrates how you will avoid or eliminate adverse effects to listed species or critical habitat (e.g., specific controls you will implement to avoid or eliminate adverse effects). **Any missing or incomplete information may result in a delay of your coverage under the permit**.

If you have made a preliminary determination that your discharges and/or discharge-related activities are not likely to adversely affect listed species and critical habitat, this form must be submitted a minimum of 30 days prior to submitting your NOI for permit coverage under criterion C. Please note that during either the 30-day *Criterion C Eligibility Form* review period prior to your NOI submission, or within 30 days after your NOI submission and before you have been authorized for permit coverage, EPA may advise you that additional information is needed, or that there are additional measures you must implement to avoid likely adverse effects.

If you are unable to make a preliminary determination that your discharges and/or discharge-related activities are not likely to adversely affect listed species and critical habitat, this worksheet must be submitted to EPA, but you may not file your NOI for permit coverage until you have received a determination from EPA that your discharges and/or discharge-related activities are not likely to adversely affect listed species and critical habitat.

Attachment 1

Include a map **and a written description** of the action area of your facility, as required in Step 2. You may choose to include the map that is generated from the FWS' on-line mapping tool IPaC (the *Information, Planning, and Consultation System*) located at http://ecos.fws.gov/ipac/.

The written description of your action area that accompanies your action area map must explain your rationale for the extant of the action area drawn on your map. For example, your action area written description may look something like this:

> *The action area for the (name of your facility)'s stormwater discharges extends downstream from the outfall(s) in (name of receiving waterbody) (# of meters/feet/kilometers/miles). The downstream limit of the action area reflects the approximate distance at which the discharge waters and any pollutants would be expected to cause potential adverse effects to listed species and/or critical habitat because (insert rationale). The action area does/does not extend to the (name of receiving waterbody)'s confluence with (name of confluence waterbody) because (insert rationale).*

Note that you action area written description will be highly site-specific, depending on the expected effects of your facility's dishcarges and discharge-related activities, receiving waterbody characteristics, etc.

Attachment 2

List or attach the listed species and critical habitat in your action area on this sheet, as required in Step 3. You must include a list for applicable listed NMFS and FWS species and critical habitat. If there are listed species and/or critical habitat for only one Service, you must include a statement confirming there are no listed species and/or critical habitat for the other Service. For FWS species, include the full printout from your IPaC query. *Note: If your Official Species List from the USFWS indicated no species or critical habitat were present in your action area, include the full consultation tracking code at the top of your Official Species List in your NOI submittal in the question "Provide a brief summary of the basis for the criterion selected in Appendix E." If an Official Species List was not available on IPaC, list the contact date and name of the Service staff with whom you corresponded to identify the existence of any USFWS species or critical habitat present in your action area.*

Appendix F - Procedures Relating to Historic Properties Preservation

F.1 Background

Section 106 of the National Historic Preservation Act (NHPA) requires Federal agencies to take into account the effects of Federal "undertakings", such as the issuance of this permit, on historic properties that are either listed or eligible for listing on the National Register of Historic Places. To address any issues relating to historic properties in connection with the issuance of this permit, EPA has developed the screening process in this appendix that enables facility operators to appropriately consider the potential impacts, if any, from the installation of stormwater controls that involve subsurface disturbance, on historic properties and to determine whether actions can be taken, if applicable, to mitigate any such impacts. Although the coverage of individual industrial facilities under this permit does not constitute separate Federal undertakings, the screening process in this appendix provides an appropriate site-specific means of addressing historic property issues in connection with EPA's issuance of the permit.

Before an operator is eligible for coverage under the 2015 MSGP (unless otherwise noted, all references to "eligible" or "eligibility" refer only to coverage under the 2015 MSGP), the operator must meet one of the certification criteria related to historic properties included in the permit. In the event an operator cannot meet any of the certification criteria included in the permit relating to historic properties, the operator must apply for an individual permit.

Key Terms

Historic Property – Prehistoric or historic districts, sites, buildings, structures, or objects that are included in or eligible for inclusion in the National Register of Historic Places, including artifacts, records, and remains that are related to and located within such properties.

***ACHP* – Advisory Council on Historic Preservation**; an independent Federal agency.

***SHPO* –** The State Historic Preservation Officer for a particular state.

***THPO or Authorized Tribal Representative* –** The Tribal Historic Preservation Officer for a particular Tribe, or if there is no THPO, the representative designated by such Tribe for NHPA purposes. Historic properties could have significance to more than one Indian tribe; therefore, all Indian tribes that attach religious and cultural significance to a historic property must be identified and included in the historic properties screening process.

Area of Potential Effects (APE) – The geographic area or areas within which an undertaking may directly or indirectly cause changes in the character or use of historic properties, if any such properties exist. The area of potential effects is influenced by the scale and nature of an undertaking and may be different for different kinds of effects caused by the undertaking.

You must meet one or more of the four criteria (A-D), which are also included in Part 1.1.4.6, to be eligible for coverage under this permit.

Activities with No Potential to Have an Effect on Historic Properties

A determination that a Federal undertaking has no potential to have an effect on historic properties fulfills an agency's obligations under the NHPA. EPA has reason to believe that the vast majority of activities authorized under the MSGP have no potential to have effects on historic properties. The purpose of this permit is to control pollutants that may be transported in stormwater runoff from industrial facilities. EPA does not anticipate effects on historic properties from the pollutants in the stormwater and allowable non-stormwater discharges from these industrial facilities. Thus, to the extent EPA's issuance of this general permit authorizes discharges of such constituents, confined to existing stormwater channels or natural drainage areas; the permitting action does not have the potential to cause effects on historic properties.

In addition, the overwhelming majority of sources covered under this permit will be facilities that are seeking renewal of previous permit coverage. These existing dischargers should have already addressed NHPA issues in the 2008 MSGP as they were required to certify that they

were either not affecting historic properties or they had obtained written agreement from the applicable State Historic Preservation Officer (SHPO) or Tribal Historic Preservation Officer (THPO) regarding methods of mitigating potential impacts. Both existing and new dischargers must follow the historic property screening procedures to determine their eligibility. EPA is not aware of any impacts on historic properties from activities covered under the 2008 MSGP, or, for that matter, any need for a written agreement. Therefore, to the extent this permit authorizes renewal of prior coverage without relevant changes in operations, it has no potential to have an effect on historic properties.

Activities with Potential to Have an Effect on Historic Properties

EPA believes this permit may have some potential to have an effect on historic properties where permittees construct and/or install stormwater control measures that involve subsurface disturbance and impact less than one (1) acre of land to comply with this permit. (Ground disturbances of one (1) acre or more require coverage under a different permit, the Construction General Permit.) Where you have to disturb the land through the construction and/or installation of control measures, there is a possibility that artifacts, records, or remains associated with historic properties could be impacted. Therefore, if you are establishing new or altering existing control measures to manage your stormwater that will involve subsurface ground disturbance of less than one (1) acre, you will need to ensure (1) that historic properties will not be impacted by your activities or (2) that you have consulted with the appropriate SHPO, THPO, or other tribal representative regarding measures that would mitigate or prevent any adverse effects on historic properties.

Examples of Control Measures Which Involve Subsurface Disturbance

EPA reviewed typical control measures currently employed to determine which practices involve some level of earth disturbance. The types of control measures that are presumptively expected to cause subsurface ground disturbance include:

- Dikes
- Berms
- Catch Basins
- Ponds
- Ditches
- Trenches
- Culverts
- Land manipulation: contouring, sloping, and grading
- Channels
- Perimeter Drains
- Swales

EPA cautions dischargers that this list is non-inclusive. Other control measures that involve earth disturbing activities that are not on this list must also be examined for the potential to affect historic properties.

Historic Property Screening Process

You should follow the following screening process in order to certify your compliance with historic property eligibility requirements under this permit (see Part 1.1.4.6). The following four steps describe how applicants can meet the permit eligibility criteria for protection of historic properties under this permit:

Step One: ***Are you an existing facility that is reapplying for certification under the 2015 MSGP?***

If you are an existing facility you should have already addressed NHPA issues. To gain coverage under the 2008 MSGP you were required to certify that you were either not affecting historic properties or had obtained written agreement from the relevant SHPO or THPO regarding methods of mitigating potential impacts. As long as you are not constructing or installing any new stormwater control measures then you have met eligibility Criterion A of the MSGP. After you submit your NOI, there is a 30-day waiting period during which the SHPO, THPO, or other tribal representative may review your NOI. The SHPO, THPO, or other tribal representative may request that EPA hold up authorization based on concerns about potential adverse impacts to historic properties. EPA will evaluate any such request and notify you if any additional measures to address adverse impacts to historic properties are necessary.

If you are an existing facility and will construct or install stormwater control measures that require subsurface disturbance of less than one (1) acre then you should proceed to Step Three. (Note: Construction activities disturbing one (1) acre or more are not eligible for coverage under this permit.)

If you are a new facility then you should proceed to Step Two.

Step Two: ***Are you constructing or installing any stormwater control measures that require subsurface disturbance of less than one (1) acre?***

If, as part of your coverage under this permit, you are not building or installing control measures on your site that cause less than one (1) acre of subsurface disturbance, then your discharge-related activities do not have the potential to have an effect on historic properties. You have no further obligations relating to historic properties. You have met eligibility Criterion A of the MSGP. After you submit your NOI, there is a 30-day waiting period during which the SHPO, THPO, or other tribal representative may review your NOI. The SHPO, THPO, or other tribal representative may request that EPA hold up authorization based on concerns about potential adverse impacts to historic properties. EPA will evaluate any such request and notify you if any additional measures to address adverse impacts to historic properties are necessary.

If the answer to the Step Two question is yes, then you should proceed to Step Three.

Step Three: ***Have prior earth disturbances determined that historic properties do not exist, or have prior disturbances precluded the existence of historic properties?***

If previous construction either revealed the absence of historic properties or prior disturbances preclude the existence of historic properties, then you have no further obligations relating to historic properties. You have met eligibility Criterion B of the MSGP. After you submit your NOI, there is a 30-day waiting period during which the SHPO, THPO, or other tribal representative may review your NOI. The SHPO, THPO, or other tribal representative may request that EPA hold up authorization based on concerns about potential adverse impacts to historic properties. EPA will evaluate any such request and notify you if any additional measures to address adverse impacts to historic properties are necessary.

If the answer to the Step Three question is no, then you should proceed to Step Four.

Step Four: ***Contact the appropriate historic preservation authorities***

Where you are building and/or installing control measures affecting less than one (1) acre of land to control stormwater or allowable non-stormwater discharges associated with this

permit, and the answer to Step Three is no, then you should contact the relevant SHPO, THPO, or other tribal representative to determine the likelihood that artifacts, records, or remains are potentially present on your site. This may involve examining local records to determine if historic artifacts have been found in nearby areas, as well as limited surface and subsurface examination carried out by qualified professionals.

If through this process it is determined that such historic properties potentially exist and may be impacted by your construction or installation of control measures, you should contact the relevant SHPO, THPO, or tribal representative in writing and request to discuss mitigation or prevention of any adverse effects. The letter should describe your facility, the nature and location of subsurface disturbance activities that are contemplated, any known or suspected historic properties in the area, and any anticipated effects on such properties. The letter should state that if the SHPO, THPO, or tribal representative does not respond within 30 days of receiving your letter, you may submit your NOI without further consultation. EPA encourages applicants to contact the appropriate authorities as soon as possible in the event of a potential adverse effect to an historic property.

If the SHPO, THPO, or tribal representative sent you a response within 30 days of receiving your letter and you enter into, and comply with, a written agreement with the SHPO, THPO, or other tribal representative regarding how to address any adverse impacts on historic properties, you have met eligibility Criterion C. In this case, you should retain a copy of the written agreement consistent with Part 5.1.6.2 of the MSGP. After you submit your NOI, there is a 30-day waiting period during which the SHPO, THPO, or other tribal representative may review your NOI. The SHPO, THPO, or other tribal representative may request that EPA delay authorization based on concerns about potential adverse impacts to historic properties. However, EPA would generally accept any written agreement as fully addressing such concerns unless new information was brought to the Agency's attention that was not considered in your previous discussions with the SHPO, THPO or other tribal representative.

If you receive a response within 30 days after the SHPO, THPO, or tribal representative received your letter and you consult with the SHPO, THPO or tribal representative regarding adverse impacts to historic properties and measures to mitigate them but an agreement cannot be reached between you and the SHPO, THPO, or other tribal representative, you have still met the eligibility for Criterion C. In this case you should include in your SWPPP a brief description of potential effects to historic properties, the consultation process, any measures you will adopt to address the potential adverse impacts, and any significant remaining disagreements between you and the SHPO, THPO or other tribal representative. After you submit your NOI, there is a 30-day waiting period during which the SHPO, THPO, or other tribal representative may review your NOI. The SHPO, THPO, or other tribal representative may request that EPA delay authorization based on concerns about potential adverse impacts to historic properties. EPA will evaluate any such request and notify you if any additional measures to address adverse impacts to historic properties are necessary.

If you have contacted the SHPO, THPO, or tribal representative in writing regarding your potential to have an effect on historic properties and the SHPO, THPO, or tribal representative did not respond within 30 days of receiving your letter, you have met eligibility Criterion D. You are advised to get a receipt from the post office or other carrier confirming the date on which your letter was received. In this case, you should submit a copy of your letter notifying the SHPO, THPO or tribal representative of potential impacts with your NOI. After you submit your NOI, there is a 30-day waiting period during which the SHPO, THPO, or other tribal representative may review your NOI. The SHPO, THPO, or other tribal representative may request that EPA hold up authorization based on concerns about potential adverse impacts to historic properties. EPA will

evaluate any such request and notify you if any additional measures to address adverse impacts to historic properties are necessary.

Addresses for State Historic Preservation Officers and Tribal Historic Preservation Officers may be found on the Advisory Council on Historic Preservation's website (www.achp.gov/programs.html). In instances where a Tribe does not have a Tribal Historic Preservation Officer, you should contact the appropriate Tribal government office when responding to this permit eligibility condition.

Appendix G - Notice of Intent (NOI) Form

Part 7.1 requires you to use the NPDES eReporting Tool, or "NeT", to prepare and submit your NOI. However, if you are given a waiver by the EPA Regional Office to use a paper NOI form, and you elect to use it, you must complete and submit the following form.

NPDES FORM 3510-6	EPA	UNITED STATES ENVIRONMENTAL PROTECTION AGENCY WASHINGTON, DC 20460 NOTICE OF INTENT (NOI) FOR STORMWATER DISCHARGES ASSOCIATED WITH INDUSTRIAL ACTIVITY UNDER THE NPDES MULTI-SECTOR GENERAL PERMIT	Form Approved. OMB No. 2040-0004

Submission of this Notice of Intent (NOI) constitutes notice that the operator identified in Section C of this form requests authorization to discharge pursuant to the NPDES Stormwater Multi-Sector General Permit (MSGP) permit number identified in Section B of this form. Submission of this NOI also constitutes notice that the operator identified in Section C of this form meets the eligibility conditions of Part 1.1 of the MSGP for the facility identified in Section D of this form. To obtain authorization, you must submit a complete and accurate NOI form. Discharges are not authorized if your NOI is incomplete or inaccurate or if you were never eligible for permit coverage. Refer to the instructions at the end of this form to complete your NOI.

A. Approval to Use Paper NOI Form

1. Have you been granted a waiver from electronic reporting from the EPA Regional Office*? ☐ YES ☐ NO

If yes, check which waiver you have been granted, the name of the EPA Regional Office staff person who granted the waiver, and the date of approval:

Waiver granted: ☐ The owner/operator's headquarters is physically located in a geographic area (i.e., ZIP code or census tract) that is identified as under-served for broadband Internet access in the most recent report from the Federal Communications Commission.

☐ The owner/operator has issues regarding available computer access or computer capability.

Name of EPA staff person that granted the waiver: _____

Date approval obtained: __ / __ / ____

* **Note: You are required to obtain approval from the applicable EPA Regional Office prior to using this paper NOI form. If you have not obtained a waiver, you must file this form electronically using the NPDES eReporting Tool (NeT) at http://water.epa.gov/polwaste/npdes/stormwater/Stormwater-eNOI-System-for-EPAs-MultiSector-General-Permit.cfm**

B. Permit Information

NPDES ID (EPA Use Only)**:** _____

1. Master Permit Number: _____ (see Appendix C of the MSGP for the list of eligible master permit numbers)

2. Are you a new discharger or a new source as defined in Appendix A? ☐ YES ☐ NO (If yes, skip to Part C of this form).

3. If you are not a new discharger or a new source, have stormwater discharges from your facility been covered previously under an NPDES permit?

☐ YES ☐ NO

If yes, provide the NPDES ID if you had coverage under EPA's 2008 MSGP or the NPDES ID if you had coverage under an EPA individual permit: _____

C. Facility Operator Information

1. Operator Information:

Operator Name: _____

Mailing Address:

Street: _____

City: _____ State: __ ZIP Code: _____ - ____

County or Similar Government Subdivision: _____

Phone: ___ - ___ - ____ Ext. ____

E-mail: _____

2. Operator Point of Contact Information:

First Name, Middle Initial, Last Name: _____ _____

Title: _____

3. NOI Preparer Information (Complete if NOI was prepared by someone other than the certifier):

First Name, Middle Initial, Last Name:

Organization: _____

Phone: ___ - ___ - ____ Ext. ____

E-mail: _____

D. Facility Information

1. Facility Name:

2. Facility Address:

Street/Location:

City: State: ZIP Code: -

County or Similar Government Subdivision:

3. Latitude/Longitude for the facility:

Latitude: ___ ___. ___ ___ ___ ___° N (decimal degrees) Longitude: ___ ___ ___. ___ ___ ___ ___° W (decimal degrees)

Latitude/Longitude Data Source: ☐ Map ☐ GPS ☐ Other

If you used a USGS topographic map, what was the scale? _____

Horizontal Reference Datum: ☐ NAD 27 ☐ NAD 83 ☐ WGS 84

4. Is your facility located on Indian Country lands? ☐ YES ☐ NO

If yes, provide the name of the Indian tribe associated with the area of Indian country (including name of Indian reservation, if applicable):

_____

5. Are you requesting coverage under this NOI as a "federal operator" as defined in Appendix A? ☐ YES ☐ NO

6. What is the ownership type of the facility? ☐ Federal Facility (U.S. Government) ☐ Privately Owned Facility ☐ Municipality ☐ County Government ☐ Corporation ☐ State Government ☐ Tribal Government ☐ School District ☐ District ☐ Mixed Ownership (e.g. Public/Private) ☐ Municipal or Water District

7. Estimated area of industrial activity at your facility exposed to stormwater: _____ (to the nearest quarter acre)

8. Sector-Specific Information

Identify the 4-digit Standard Industrial Classification (SIC) code or 2-letter Activity Code that best represents the products produced or services rendered for which your facility is primarily engaged, as defined in the MSGP, and the applicable sector and subsector of your primary industrial activity (See Appendix D):

Primary SIC Code: OR **Primary Activity Code:**

Sector: **Subsector:**

Identify the applicable sector(s) and subsector(s) of any co-located industrial activity for which you are requesting permit coverage:

Sector: **Subsector:** **Sector:** **Subsector:** **Sector:** **Subsector:**

Sector: **Subsector:** **Sector:** **Subsector:** **Sector:** **Subsector:**

If you are a Sector S (Air Transportation) facility, do you anticipate using more than 100,000 gallons of pure glycol in glycol-based deicing fluids and/or 100 tons or more of urea on an average annual basis? ☐ YES ☐ NO

If you are a Sector G (Metal Mining) facility, do you have discharges from waste rock and overburden piles? ☐ YES ☐ NO

Check the type of ore you mine at your facility: ☐ Tungsten Ore ☐ Nickel Ore ☐ Aluminum Ore ☐ Mercury Ore ☐ Iron Ore ☐ Platinum Ore ☐ Titanium Ore ☐ Vanadium Ore ☐ Molybdenum ☐ Uranium, Radium, and/or Vanadium Ore

9. Is your facility presently inactive and unstaffed?* ☐ YES ☐ NO

* Note that if your facility becomes inactive and unstaffed during the permit term, you must submit an NOI modification to reflect the change.

E. Discharge Information

1. By indicating "Yes" below, I confirm that I understand that the MSGP only authorizes the allowable stormwater discharges in Part 1.1.2 and the allowable non-stormwater discharges listed in Part 1.1.3. Any discharges not expressly authorized in this permit cannot become authorized or shielded from liability under CWA section 402(k) by disclosure to EPA, state, or local authorities after issuance of this permit via any means, including the Notice of Intent (NOI) to be covered by the permit, the Stormwater Pollution Prevention Plan (SWPPP), during an inspection, etc. If any discharges requiring NPDES permit coverage other than the allowable stormwater and non-stormwater discharges listed in Parts 1.1.2 and 1.1.3 will be discharged, they must be covered under another NPDES permit. ☐ YES

2. Federal Effluent Limitation Guidelines

Are you requesting permit coverage for any stormwater discharges subject to effluent limitation guidelines? ☐ YES ☐ NO

If yes, which effluent limitation guidelines apply to your stormwater discharges?

40 CFR Part/Subpart	Eligible Discharges	Affected MSGP Sector	New Source Date	Check if Applicable
Part 411, Subpart C	Runoff from material storage piles at cement manufacturing facilities	E	2/20/1974	☐
Part 418 Subpart A	Runoff from phosphate fertilizer manufacturing facilities that comes into contact with any raw materials, finished product, by-products or waste products (SIC 2874)	C	4/8/1974	☐
Part 423	Coal pile runoff at steam electric generating facilities	O	11/19/1982 10/8/1974[1]	☐
Part 429, Subpart I	Discharges resulting from spray down or intentional wetting of logs at wet deck storage areas	A	1/26/1981	☐
Part 436, Subpart B, C, or D	Mine dewatering discharges at crushed stone mines, construction sand and gravel mines, or industrial sand mines	J	N/A	☐
Part 443, Subpart A	Runoff from asphalt emulsion facilities	D	7/28/1975	☐
Part 445, Subparts A & B	Runoff from hazardous waste and non-hazardous waste landfills	K, L	2/2/2000	☐
Part 449	Runoff containing urea from airfield pavement deicing at existing and new primary airports with 1,000 or more annual non-propeller aircraft departures	S	6/15/2012	☐

[1]NSPS promulgated in 1974 were not removed via the 1982 regulation; therefore wastewaters generated by Part 423-applicable sources that were New Sources under the 1974 regulations are subject to the 1974 NSPS.

3. Receiving Waters Information: (Attach a separate list if necessary)

List all of the stormwater outfalls from your facility. Each outfall must be identified by a unique 3-digit ID (e.g., 001, 002). Also provide the latitude and longitude in degrees decimal for each outfall.		**For each outfall, provide the following receiving water information:**		
		Provide the name of the first water of the U.S. that receives stormwater directly from the outfall and/or from the MS4 that the outfall discharges to:	**If the receiving water is impaired (on the CWA 303(d) list), list the pollutants that are causing the impairment:**	**If a TMDL been completed for this receiving waterbody, providing the following information:**
Outfall ID				**TMDL Name and ID:**
Latitude				**Pollutant(s) for which there is a TMDL:**
Longitude				
Outfall ID				**TMDL Name and ID:**
Latitude				**Pollutant(s) for which there is a TMDL:**
Longitude				
If substantially identical to other outfall, list identical outfall ID: _____				

Outfall ID				**TMDL Name and ID:**
Latitude				**Pollutant(s) for which there is a TMDL:**
Longitude				
If substantially identical to other outfall, list identical outfall ID: _____				
Outfall ID				**TMDL Name and ID:**
Latitude				**Pollutant(s) for which there is a TMDL:**
Longitude				
If substantially identical to other outfall, list identical outfall ID: _____				
Outfall ID				**TMDL Name and ID:**
Latitude				**Pollutant(s) for which there is a TMDL:**
Longitude				
If substantially identical to other outfall, list identical outfall ID: _____				
Outfall ID				**TMDL Name and ID:**
Latitude				**Pollutant(s) for which there is a TMDL:**
Longitude				
If substantially identical to other outfall, list identical outfall ID: _____				

4. Provide the following Information about your outfall latitude longitude:

Latitude/Longitude Data Source: ☐ Map ☐ GPS ☐ Other

If you used a USGS topographic map, what was the scale? _____

Horizontal Reference Datum: ☐ NAD 27 ☐ NAD 83 ☐ WGS 84

5. Does your facility discharge into a Muncipal Separate Storm Sewer System (MS4)? ☐ YES ☐ NO

If yes, provide the name of the MS4 operator:_____

6. Check if you discharge to any of the waters of the U.S. that are designated by the state or tribal authority under its antidegradation policy as a Tier 2 (or Tier 2.5) water (water quality exceeds levels necessary to support propagation of fish, shellfish, and wildlife and recreation in and on the water) or as a Tier 3 water (Outstanding National Resource Water)? (See Appendix L).

☐ Tier 2/2.5. Provide the name(s) of receiving water(s):_____

☐ Tier 3 (Outstanding National Resource Waters)*

*** Note: You are ineligible for coverage if you are a new discharger or new source to waters designated as Tier 3 (outstanding national resource waters) for antidegradation purposes under 40 CFR 131.13(a)(3).**

7. If you are subject to benchmark monitoring requirements for a hardness-dependent metal, what is the hardness of your receiving water(s) (see Appendix J)?

_____ (mg/L)

8. If you are subject to benchmark monitoring requirements for a hardness-dependent metal, does your facility discharge into any saltwater receiving waters?
☐ YES ☐ NO

9. Does your facility discharge to a federal CERCLA site listed in Appendix P? ☐ YES ☐ NO

If yes, did you notify the EPA Regional Office in advance of filing your NOI, and did the EPA Regional Office determine that you are eligible for permit coverage pursuant to Part 1.1.4.10*? ☐ YES ☐ NO

*** Note: If you discharge to a federal CERCLA site listed in Appendix P, you are ineligible for coverage under this permit unless you notify the EPA Regional Office in advance and the EPA Regional Office determines you are eligible coverage under this permit. In determining your eligibility for coverage under this Part, the EPA Regional Office may evaluate whether you have included adequate controls and/or procedures to ensure that your discharges will not lead to recontamination of aquatic media at the CERCLA Site such that it will to cause or contribute to an exceedance of a water quality standard.**

F. Stormwater Pollution Prevention Plan (SWPPP) Information

1. Has the SWPPP been prepared in advance of filing this NOI, as required? ☐ YES ☐ NO

2. SWPPP Contact Information:

First Name, Middle Initial, Last Name: _____ ___ _____

Professional Title: _____

Phone: ___ - ___ - ____ Ext. ____

E-mail: _____

3. SWPPP Availability:

Your current SWPPP or certain information from your SWPPP must be made available through one of the following two options. Select one of the options and provide the required information*:

*** Note: You are not required to post any confidential business information (CBI) or restricted information (as defined in Appendix A) (such information may be redacted), but you must clearly identify those portions of the SWPPP that are being withheld from public access.**

☐ **Option 1**: Maintain a current copy of your SWPPP on an Internet page (Universal Resource Locator or URL).

Provide the web address URL:_____

☐ **Option 2**: Provide the following information from your SWPPP:

A. Describe your onsite industrial activities exposed to stormwater (e.g., material storage; equipment fueling, maintenance, and cleaning; cutting steel beams), and potential spill and leak areas:

B. List the pollutant(s) or pollutant constituent(s) associated with each industrial activity exposed to stormwater that could be discharged in stormwater and any authorized non-stormwater discharges listed in Part 1.1.3:

C. Describe the control measures you will employ to comply with the non-numeric technology-based effluent limits required in Part 2.1.2 and Part 8, and any other measures taken to comply with the requirements in Part 2.2 Water Quality-Based Effluent Limitations (see Part 5.2.4):

D. Provide a schedule for good housekeeping and maintenance (see Part 5.2.5.1) and a schedule for all inspections required in Part 4 (see Part 5.2.5.2):

G. Endangered Species Protection

1. Using the instructions in Appendix E of the MSGP, under which endangered species criterion listed in Part 1.1.4.5 are you eligible for coverage under this permit (only check 1 box)?*

☐ A ☐ B ☐ C ☐ D ☐ E

* **Note: After you submit your NOI and before your NOI is authorized, EPA may notify you if any additional controls are necessary to ensure your discharges have no likely adverse affects on listed species and critical habitat.**

2. Provide a brief summary of the basis for the criterion selected in Appendix E (e.g., communication with U.S. Fish and Wildlife Service or National Marine Fisheries Service to determine no species in action area; implementation of controls approved by EPA and the Services):

3. If you select criterion B, provide the NPDES ID from the other operator's NOI authorized under this permit: ☐☐☐☐☐☐☐☐☐

4. If you select criterion C, you must answer the following questions:

a. What federally-listed species or designated critical habitat are located in your "action area":

b. Using the Appendix E worksheet, check which of the following is applicable to your facility and answer any corresponding questions:

☐ I submitted my completed *Criterion C Eligibility Form* to EPA at least 30 days prior to submitting this NOI and agree to implement any additional measures that were determined by EPA to be necessary to ensure that my discharges and/or discharge-related activities will not have likely adverse affects on listed species and critical habitat.

Date your *Criterion C Eligibilty Form* was sent to EPA: ☐☐ / ☐☐ / ☐☐☐☐

Describe any EPA-approved measures you will implement to ensure no likely adverse affects on listed species and critical habitat:

☐ I submitted my completed *Criterion C Eligibility Form* to EPA at least 30 days prior to submitting this NOI and have not been notified of any additional measures necessary to ensure no likely adverse affects on listed species and critical habitat.

Date your *Criterion C Eligibility Form* was sent to EPA: ☐☐ / ☐☐ / ☐☐☐☐

5. If you select criterion D or E, you must attach copies of any letters or other communications with the U.S. Fish and Wildlife Service or National Marine Fisheries Service.

H. Historic Preservation

1. If your facility is not located on Indian country lands, is your facility located on a property of religious or cultural significance to an Indian tribe?

   ☐ YES ☐ NO

   If yes, provide the name of the Indian tribe associated with the property:_____

2. Using the instructions in Appendix F of the MSGP, under which historic properties preservation criterion listed in Part 1.1.4.6 are you eligible for coverage under this permit (only check 1 box)?

   ☐ A ☐ B ☐ C ☐ D

I. Certification Information

I certify under penalty of law that this document and all attachments were prepared under my direction or supervision in accordance with a system designed to assure that qualified personnel properly gathered and evaluated the information submitted. Based on my inquiry of the person or persons who manage the system, or those persons directly responsible for gathering the information, the information submitted is, to the best of my knowledge and belief, true, accurate, and complete. I am aware that there are significant penalties for submitting false information, including the possibility of fine and imprisonment for knowing violations.

First Name, Middle Initial, Last Name: _____ ___ _____

Title: _____

Signature: _____ Date: __ / __ / ____

E-mail: _____

Notice of Intent (NOI) for Stormwater Discharges Associated with Industrial Activity Under the NPDES Multi-Sector General Permit

NPDES Form Date (06/15) This Form Replaces From 3510-6 (09/08) Form Approved OMB No. 2040-0004

Who Must File an NOI Form

Under section 402(p) of the Clean Water Act (CWA) and regulations at 40 CFR Part 122, stormwater discharges associated with industrial activity are prohibited to waters of the United States unless authorized under a National Pollutant Discharge Elimination System (NPDES) permit. You can obtain coverage under the MSGP by submitting a completed Notice of Intent (NOI) if you are an operator a facility:

- that is located in a jurisdiction where EPA is the permitting authority, listed in Appendix C of the MSGP,
- that discharges stormwater associated with industrial activities, identified in Appendix D of the MSGP,
- that meets the eligibility requirements in Part 1.1 of the permit,
- that has developed a stormwater pollution prevention plan (SWPPP) in accordance with Part 5 of the MSGP; and
- that installs and implements control measures in accordance with Part 2 and Part 8 to meet numeric and non-numeric effluent limits.

Completing the Form

Obtain and read a copy of the 2015 MSGP, viewable at http://water.epa.gov/polwaste/npdes/stormwater/EPA-Multi-Sector-General-Permit-MSGP.cfm. To complete this form, type or print, using uppercase letters, in the appropriate areas only. Please place each character between the marks. Abbreviate if necessary to stay within the number of characters allowed for each item. Use only one space for breaks between words, but not for punctuation marks unless they are needed to clarify your response. **Please submit original document with signature in ink - do not send a photocopied signature.**

Section A. Approval to Use Paper NOI Form

You must indicate whether you have been granted a waiver from electronic reporting from the EPA Regional Office. Note that you are not authorized to use this paper NOI form unless the EPA Regional Office has approved its use. Where you have obtained approval to use this form, indicate the waiver that you have been granted, the name of the EPA staff person who granted the waiver, and the date that approval was provided.

See http://water.epa.gov/polwaste/npdes/stormwater/Stormwater-Contacts.cfm for a list of EPA Regional Office contacts.

Section B. Permit Information

Provide the master permit number of the permit under which you are applying for coverage (see Appendix C of the general permit for the list of eligible master permit numbers).

You must indicate whether you are a new discharger or a new source (see Appendix A for the definitions). If you are not a new discharger or a new source, you must indicate whether stormwater discharges from your facility have been previously covered under another NPDES permit. If yes, you must provide the unique NPDES ID (i.e., permit tracking number) for the previous permit your facility was covered under.

Section C. Facility Operator Information

Provide the legal name of the person, firm, public organization, or any other entity that operates the facility described in this NOI. An operator of a facility is the legal entity that controls the operation of the facility. Refer to Appendix A of the permit for the definition of "operator". Provide the operator's mailing address, phone number, and e-mail. Correspondence for the NOI will be sent to this address. Also provide the name and title for the operator point of contact (note that the point of contact name may be the same as the operator name).

If the NOI was prepared by someone other than the certifier (for example, if the NOI was prepared by the facility SWPPP contact or a consultant for the certifier's signature), include the full name, organization, phone number, and email address of the NOI preparer.

Section D. Facility Information

Enter the official or legal name and complete address, including city, state, ZIP code, and county or similar government subdivision of the facility. If the facility lacks a street address, indicate the general location of the facility (e.g., Intersection of State Highways 61 and 34). Complete facility information must be provided for permit coverage to be granted.

Provide the latitude and longitude of your facility in decimal degrees format. The latitude and longitude of your facility can be determined in several different ways, including through the use of global positioning system (GPS) receivers, U.S. Geological Survey (U.S.G.S.) topographic or quadrangle maps. Refer to http://transition.fcc.gov/mb/audio/bickel/DDDMMSS-decimal.html/ for assistance in providing the proper latitude/longitude format. For consistency, EPA requests that measurements be taken from the approximate center of the facility. Specify which method you used to determine latitude and longitude. If a U.S.G.S. topographic map is used, specify the scale of the map used. Enter the horizontal reference datum for your latitude and longitude. The horizontal reference datum used on USGS topographic maps is shown on the bottom left corner of USGS topographic maps; it is also available for GPS receivers.

Indicate whether the facility is on Indian country lands, and if so, provide the name of the Indian tribe associated with the area of Indian country (including name of Indian reservation, if applicable).

Indicate whether you are seeking coverage under this permit as a "federal operator" as defined in Appendix A. Also check the ownership type for the facility (e.g., Federal Facility, Privately Owned Facility, Municipality, County Government, Corporation, State Government, Tribal Government, School District, District, Mixed Ownership [e.g., public/private], Municipal or Water District).

Enter the estimated area of industrial activity at your facility exposed to stormwaterto the nearest quarter acre.

List the four-digit Standard Industrial Classification (SIC) code or two character activity code that best describes the primary industrial activities performed by your facility under which you are required to obtain permit coverage. Your primary industrial activity includes any activities performed on-site which are (1) identified by the facility's primary SIC code and included in the descriptions of 40 CFR 122.26(b)(14)(ii), (iii), (vi), or (viii); or (2) included in the narrative descriptions of 40 CFR 122.26(b)(14)(i), (iv), (v), (vii), or (ix). See Appendix D of the MSGP for a complete list of SIC codes and activities codes covered under the MSGP. Also provide the applicable sector and subsector associated with the SIC code or activity code for your primary industrial activities. For a complete list of sector and subsector codes, see Appendix D of the MSGP.

If your facility has co-located industrial activities that are not identified as your primary industrial activity, identify the sector and subsector codes that describe these other industrial activities.

For Sector S facilities (Air Transportation), indicate whether you anticipate that the entire airport facility will use more than 100,000 gallons of pure glycol in glycol-based deicing fluids and/or 100 tons or more of urea on an average annual basis. If so, additional effluent limits and monitoring conditions apply to your discharge (see Part 8.S of the permit).

For Sector G facilities (Metal Mining), check the type of ore(s) mined at the facility.

Indicate whether your facility is currently inactive and unstaffed. Note that if your facility becomes inactive and unstaffed during the permit term, you must submit an NOI modification to reflect the change.

Section E. Discharge Information

You must confirm that you understand that the MSGP only authorizes the allowable stormwater discharges listed in Part 1.1.2 and the allowable non-stormwater discharges listed in Part 1.1.3. Any discharges not expressly authorized under the MSGP are not covered by the MSGP or the permit shield provision of the CWA Section 402(k) and they cannot become authorized or shielded by disclosure to EPA, state, or local authorities via the NOI to be covered by the permit or by any other means (e.g., in the SWPPP or during an inspection). If any discharges requiring NPDES permit coverage other than the allowable stormwater and non-stormwater discharges listed in Parts 1.1.2 and 1.1.3 will be discharged, they must either be eliminated or covered under another NPDES permit.

Depending on your industrial activities, your facility may be subject to federal effluent limitation guidelines which include additional effluent limits and monitoring requirements for your facility. Please review these requirements, described in Part 2.1.3 of the MSGP, and check any appropriate boxes on the NOI form.

You must identify all the outfalls from your facility that discharge stormwater. Each outfall must be assigned a unique 3-digit ID (e.g., 001, 002, 003). You must also provide the latitude and longitude for each outfall from your facility. Indicate whether any outfalls are substantially identical to an outfall already listed, and identify the outfall it is identical to. For each unique outfall you list, you must specify the name of the first water of the U.S. that receives stormwater directly from the outfall and/or from the MS4 that the outfall discharges to. You must specify whether any receiving waters that you discharge to are listed as "impaired" as defined in Appendix A, and the pollutants for which the water is impaired. You must also check identify any Total Maximum Daily Loads (TMDL) that have been completed for any of the waters of the U.S. that you discharge to. You must also provide information about the outfall latitude/longitude, including data source, the scale (if applicable), and the horizontal reference datum. See the instructions in Section D for more information about determining the latitude and longitude.

Identify whether your facility discharges into a Municipal Separate Storm Sewer System (MS4). If yes, provide the name of the MS4 operator. If you are uncertain of the MS4 operator, contact your local government for that information.

Indicate whether discharges from the facility will enter into a water of the U.S that is designated as a Tier 2, Tier 2.5, or Tier 3 water. A list of Tier 2, 2.5, and 3 waters is provided as Appendix L. If the answer is "yes", name all waters designated as Tier 2, Tier 2.5, or Tier 3 to which the facility will discharge. Note that you are ineligible for coverage if you are a new discharger or a new source to waters designated as Tier 3 (outstanding national resource waters) for antidegradation purposes under 40 CFR 131.13(a)(3).

If you are subject to any benchmark monitoring requirements for metals (see the requirements applicable to your Sector(s) in Part 8 of the permit), indicate the hardness for your receiving water(s). See Appendix J of the permit for information about determining waterbody hardness.

If you are subject to benchmark monitoring requirements for hardness-dependent metals you must also answer whether your facility discharges into any saltwater receiving waters.

Indicate whether your facility will discharge to a federal CERCLA site listed in Appendix P. Note that if your facility will discharge into a federal CERCLA site listed in Appendix P, you are not eligible for coverage under this permit unless you notify the EPA Regional Office in advance and the EPA Regional Office authorizes overage under this permit after you have included adequate controls and/or procedures designed to ensure that discharges will not lead to recontamination of aquatic media at the CERCLA site such that your discharge will cause or contribute to an exceedance of a water quality standard.

Section F. Stormwater Pollution Prevention Plan (SWPPP) Information

All facilities eligible for coverage under this permit are required to prepare a SWPPP in advance of filing the NOI, in accordance with Part 5. Indicate whether the SWPPP has been prepared in advance of filing the NOI.

Indicate the contact information (name, phone, and email) for the person who developed the SWPPP for this facility.

You identify how your SWPPP information will be made available, consistent with Part 5.4 and 7.3 of the permit. If you are making your SWPPP publicly available on a web site, check Option 1 and provide the appropriate Internet URL address. If you are not providing a URL, check Option 2 and provide the selected SWPPP information on this NOI form. You may copy and paste this information directly from your SWPPP.

Section G. Endangered Species Protection

Using the instructions in Appendix E, indicate the Part 1.1.4.5 criterion (i.e., A, B, C, D, or E) you are eligible under with regard to the protection of federally listed endangered and threatened species and designated critical habitat. A description of the basis for the criterion selected must also be provided.

If criterion B is selected, provide the NPDES ID (i.e., permit tracking number) for the other operator who has certified their eligibility under this permit. The NPDES ID was assigned when the operator received coverage under this permit.

If criterion C is selected, you must specify the federally-listed species or designated critical habitat that are located in the "action area" of the facility. You must also indicate under which scenario you determined you were eligible to submit your NOI under criterion C using Appendix E, and answer any corresponding questions.

If criterion D or E is selected, attach copies of any communications between you and the U.S. Fish and Wildlife Service and National Marine Fisheries Service to this NOI.

Section H. Historic Preservation

If the project is not located in Indian country lands, indicate whether the project is located on a property of religious or cultural significance to an Indian tribe, and if so, provide the name of the Indian tribe associated with the property. Use the instructions in Appendix F to complete the questions on the NOI form regarding historic preservation.

Section H. Certification

Certification statement and signature (see Section B.11 of Appendix B of the MSGP for more information). Enter certifier's printed name, title and email address. Sign and date the form. (CAUTION: An unsigned or undated NOI form will prevent the granting of permit coverage.) Federal statutes provide for severe penalties for submitting false information on this application form. Federal regulations require this application to be signed as follows:

For a corporation: by a responsible corporate officer, which means: (i) a president, secretary, treasurer, or vice-president of the corporation in charge of a principal business function, or any other person who performs similar policy- or decision-making functions for the corporation, or (ii) the manager of one or more manufacturing, production, or operating facilities, provided, the manager is authorized to make management decisions which govern the operation of the regulated facility including having the explicit or implicit duty of making major capital investment recommendations, and initiating and directing other comprehensive measures to assure long-term environmental compliance with environmental laws and regulations; the manager can ensure that the necessary systems are established or actions taken to gather complete and accurate information for permit application requirements; and where authority to sign documents has been assigned or delegated to the manager in accordance with corporate procedures.

For a partnership or sole proprietorship: By a general partner or the proprietor, respectively; or

For a municipality, state, federal, or other public agency: By either a principal executive officer or ranking elected official. For purposes of this Part, a principal executive officer of a federal agency includes (i) the chief executive officer of the agency, or (ii) a senior executive officer having responsibility for the overall operations of a principal geographic unit of the agency (e.g., Regional Administrator of EPA). Include the name and title of the person signing the form and the date of signing.

An unsigned or undated NOI form will not be considered eligible for permit coverage.

Modifying Your NOI

If you have been granted a waiver from your Regional Office from electronic reporting, and if after submitting your NOI you need to correct or update any fields on this NOI form, you may do so by indicating changes on this same form.

Paperwork Reduction Act Notice

Public reporting burden for this NOI is estimated to average 3.7 hours, plus an additional 2 hours for certain respondents required to gather hardness data. This estimate includes time for reviewing instructions, searching existing data sources, gathering and maintaining the data needed, and completing and reviewing the collection of information. An agency may not conduct or sponsor, and a person is not required to respond to, a collection of information unless it displays a currently valid OMB control number. Send comments regarding the burden estimate, any other aspect of the collection of information, or suggestions for improving this form, including any suggestions which may increase or reduce this burden to: Director, Collection Strategies Division, U.S. Environmental Protection Agency (2822T), 1200 Pennsylvania Ave., NW, Washington, D.C. 20460. Include the OMB control number on any correspondence. Do not send the completed form to this address.

Submitting Your Form

If you have been granted a waiver from your Regional Office to submit a paper NOI form, you must send your NOI by mail to one of the following addresses:

For Regular U.S. Mail Delivery:
Stormwater Notice Processing Center
Mail Code 4203M, ATTN: 2015 MSGP Reports
U.S. EPA
1200 Pennsylvania Avenue, NW
Washington, DC 20460

For Overnight/Express Mail Delivery:
Stormwater Notice Processing Center
William Jefferson Clinton East Building - Room 7420
ATTN: 2015 MSGP Reports
U.S. EPA
1201 Constitution Avenue, NW
Washington, DC 20004

Visit this website for instructions on how to submit electronically:
http://water.epa.gov/polwaste/npdes/stormwater/Stormwater-eNOI-System-for-EPAs-MultiSector-General-Permit.cfm

Appendix H - Notice of Termination (NOT) Form

Part 7.1 requires you to use the NPDES eReporting Tool, or "NeT", to prepare and submit your Notice of Termination (NOT). However, if you are given a waiver by the EPA Regional Office to use a paper NOT form, and you elect to use it, you must complete and submit the following form.

NPDES FORM 3510-7	EPA	UNITED STATES ENVIRONMENTAL PROTECTION AGENCY WASHINGTON, DC 20460 NOTICE OF TERMINATION (NOT) FOR STORMWATER DISCHARGES ASSOCIATED WITH INDUSTRIAL ACTIVITY UNDER THE NPDES MULTI-SECTOR GENERAL PERMIT	Form Approved. OMB No. 2040-0004

Submission of this Notice of Termination constitutes notice that the operator identified in Section C of this form is no longer authorized to discharge pursuant to the NPDES Multi-Sector General Permit (MSGP) from the facility identified in Section D of this form. All necessary information must be included on this form. Refer to the instructions at the end of this form.

A. Approval to use Paper NOT Form

1. Have you been granted a waiver from electronic reporting from the Regional Office*? ☐ YES ☐ NO

If yes, check which waiver you have been granted, the name of the EPA Regional Office staff person who granted the waiver, and the date of approval:

Waiver granted: ☐ The owner/operator's headquarters is physically located in a geographic area (i.e., ZIP code or census tract) that is identified as under-served for broadband Internet access in the most recent report from the Federal Communications Commission.

☐ The owner/operator has issues regarding available computer access or computer capability.

Name of EPA staff person that granted the waiver: _____

Date approval obtained: __ / __ / ____

*** Note: You are required to obtain approval from the applicable Regional Office prior to using this paper NOT form. If you have not obtained a waiver, you must file this form electronically using the NPDES eReporting Tool (NeT) at http://water.epa.gov/polwaste/npdes/stormwater/Stormwater-eNOI-System-for-EPAs-MultiSector-General-Permit.cfm**

B. Permit Information

1. NPDES ID: _____

2. Reason for Termination (check one only):

☐ A new owner or operator has taken over responsibility for the facility.

☐ You have ceased operations at the facility, there are not or no longer will be discharges of stormwater associated with industrial activity from the facility, and you have already implemented necessary sediment and erosion controls as required by Part 2.1.2.5.

☐ You are a Sector G, H, or J facility and you have met the applicable termination requirements.

☐ You obtained coverage under an individual or alternative general permit for all discharges required to be covered by an NPDES permit.

C. Facility Operator Information

1. Operator Name: _____

2. Mailing Address:

Street: _____

City: _____ State: __ ZIP Code: _____ - ____

3. Phone: ___ - ___ - ____ Ext. ____

4. E-mail: _____

D. Facility Information

1. Facility Name: _____

2. Facility Address:

Street: _____

City: _____ State: __ ZIP Code: _____ - ____

County or similar government subdivision: _____

E. Certification Information

I certify under penalty of law that this document and all attachments were prepared under my direction or supervision in accordance with a system designed to assure that qualified personnel properly gathered and evaluated the information submitted. Based on my inquiry of the person or persons who manage the system, or those persons directly responsible for gathering the information, the information submitted is, to the best of my knowledge and belief, true, accurate, and complete. I am aware that there are significant penalties for submitting false information, including the possibility of fine and imprisonment for knowing violations.

First Name, Middle Initial, Last Name:

Title:

Signature: _____ Date: / /

E-mail:

Instructions for Completing EPA Form 3510-7

Notice of Termination for Stormwater Discharges
Associated with Industrial Activity Under the NPDES Multi-Sector General Permit

NPDES Form Date (06/15) This Form Replaces From 3510-7 (09/08) Form Approved OMB No. 2040-0004

Who May File Notice of Termination (NOT) Form

Permittees currently covered by EPA's NPDES Stormwater Multi-Sector General must submit a Notice of Termination (NOT) within 30 days after one or more of the following conditions have been met:

- A new owner or operator has assumed responsibility for the facility;
- You have ceased operations at the facility and there are not or no longer will be discharges of stormwater associated with industrial activity from the facility and you have already implemented necessary sediment and erosion controls per Part 2.1.2.5;
- You are a Sector G, H, or J facility and you have met the applicable termination requirements; or
- You obtained coverage under an individual or alternative general permit for all discharges required to be covered by an NPDES permit.

See the MSGP Part 1.3.3 for more information.

Completing the Form

To complete this form, type or print, using uppercase letters, in the appropriate areas only. Please place each character between the marks. Abbreviate if necessary to stay within the number of characters allowed for each item. Use only one space for breaks between words, but not for punctuation marks unless they are needed to clarify your response. Please submit original document with signature in ink - do not send a photocopied signature.

Section A. Approval to Use Paper NOT Form

You must indicate whether you have been granted a waiver from electronic reporting from the EPA Regional Office. Note that you are not authorized to use this paper NOT form unless the EPA Regional Office has approved its use. Where you have obtained approval to use this form, indicate the waiver that you have been granted, the name of the EPA Regional Office staff person who granted the waiver, and the date that approval was provided. See http://water.epa.gov/polwaste/npdes/stormwater/Stormwater-Contacts.cfm for a list of EPA Regional Office contacts.

Section B. Permit Information

Enter the existing NPDES ID (i.e., NOI tracking number) assigned to your permit authorization.

Indicate your reason for submitting this Notice of Termination by checking the appropriate box. Check only one box (see MSGP Part 1.3.3 for more information).

Section C. Facility Operator Information

Provide the legal name of the person, firm, public organization, or any other entity that operates the facility described in this NOT. An operator of a facility is the legal entity that controls the operation of the facility. Refer to Appendix A of the permit for the definition of "operator". Provide the operator's mailing address, phone number, and e-mail.

Section D. Facility Information

Enter the official or legal name and complete street address, including city, state, ZIP code, and county or similar government subdivision of the facility. If the facility lacks a street address, indicate the general location of the facility (e.g., Intersection of State Highways 61 and 34). Complete facility information must be provided for termination of permit coverage to be valid.

Section E. Certification Information

All NOTs must be signed as follows:

For a corporation: By a responsible corporate officer. For the purpose of this Section, a responsible corporate officer means: (i)a president, secretary, treasurer, or vice-president of the corporation in charge of a principal business function, or any other person who performs similar policy- or decision-making functions for the corporation, or (ii) the manager of one or more manufacturing, production, or operating facilities, provided, the manager is authorized to make management decisions which govern the operation of the regulated facility including having the explicit or implicit duty of making major capital investment recommendations, and initiating and directing other comprehensive measures to assure long-term environmental compliance with environmental laws and regulations; the manager can ensure that the necessary systems are established or actions taken to gather complete and accurate information for permit application requirements; and where authority to sign documents has been assigned or delegated to the manager in accordance with corporate procedures.

For a partnership or sole proprietorship: By a general partner or the proprietor, respectively; or

For a municipality, state, federal, or other public agency: By either a principal executive officer or ranking elected official. For purposes of this Part, a principal executive officer of a federal agency includes (i) the chief executive officer of the agency, or (ii) a senior executive officer having responsibility for the overall operations of a principal geographic unit of the agency (e.g., Regional Administrator of EPA). Include the name and title of the person signing the form and the date of signing.

Include the name, title, and email address of the person signing the form and the date of signing. An unsigned or undated NOT form will not be considered valid termination of permit coverage.

Paperwork Reduction Act Notice

Public reporting burden for this Notice of Termination is estimated to average 0.5 hours, including time for reviewing instructions, searching existing data sources, gathering and maintaining the data needed, and completing and reviewing the collection of information. Send comments regarding the burden estimate, any other aspect of the collection of information, or suggestions for improving this form, including any suggestions which may increase or reduce this burden to: Director, Collection Strategies Division, U.S. Environmental Protection Agency (2822T), 1200 Pennsylvania Ave., NW, Washington, D.C. 20460. Include the OMB control number of this form on any correspondence. Do not send the completed NOT form to this address.

Instructions for Completing EPA Form 3510-7

Notice of Termination for Stormwater Discharges
Associated with Industrial Activity Under the NPDES Multi-Sector General Permit

NPDES Form Date (06/15) This Form Replaces From 3510-7 (09/08) Form Approved OMB No. 2040-0004

Submitting Your Form

If you have been granted a waiver from your Regional Office to submit a paper NOT form, you must send your NOT by mail to one of the following addresses:

For Regular U.S. Mail Delivery:

Stormwater Notice Processing Center
Mail Code 4203M, ATTN: 2015 MSGP Reports
U.S. EPA
1200 Pennsylvania Avenue, NW
Washington, DC 20460

For Overnight/Express Mail Delivery:

Stormwater Notice Processing Center
William Jefferson Clinton East Building - Room 7420
ATTN: 2015 MSGP Reports
U.S. EPA
1201 Constitution Avenue, NW
Washington, DC 20004

Visit this website for instructions on how to submit electronically:
http://water.epa.gov/polwaste/npdes/stormwater/Stormwater-eNOI-System-for-EPAs-MultiSector-General-Permit.cfm

Appendix I - Annual Report Form

Part 7.1 requires you to use the NPDES eReporting Tool, or "NeT", to prepare and submit your Annual Report. However, if you are given a waiver by the EPA Regional Office to use a paper annual report form, and you elect to use it, you must complete and submit the following form.

NPDES FORM 6100-28	EPA	UNITED STATES ENVIRONMENTAL PROTECTION AGENCY WASHINGTON, DC 20460 ANNUAL REPORT FOR STORMWATER DISCHARGES ASSOCIATED WITH INDUSTRIAL ACTIVITY UNDER THE NPDES THE NPDES MULTI-SECTOR GENERAL PERMIT	Form Approved. OMB No. 2040-0004

A. Approval to Use Paper Annual Report Form

1. Have you been granted a waiver from electronic reporting from the EPA Regional Office*? ☐ YES ☐ NO

If yes, check which waiver you have been granted, the name of the EPA Regional Office staff person who granted the waiver, and the date of approval:

Waiver granted:

☐ The owner/operator's headquarters is physically located in a geographic area (i.e., ZIP code or census tract) that is identified as under-served for broadband Internet access in the most recent report from the Federal Communications Commission.

☐ The owner/operator has issues regarding available computer access or computer capability.

Name of EPA staff person that granted the waiver:

Date approval obtained: / /

*** Note: You are required to obtain approval from the applicable EPA Regional Office prior to using this paper annual report form. If you have not obtained a waiver, you must file this form electronically using the NPDES eReporting Tool (NeT) at http://water.epa.gov/polwaste/npdes/stormwater/Stormwater-eNOI-System-for-EPAs-MultiSector-General-Permit.cfm**

B. Permit Information

1. NPDES ID:

C. Facility Information

1. Facility Name:

2. Facility Phone: - - Ext.

3. Facility Mailing Address:

Street:

City: State: ZIP Code: -

County or Similar Government Subdivision:

4. Point of Contact:

First Name, Middle Initial, Last Name:

D. General Findings

1. Provide a summary of your past year's routine facility inspection documentation (see Part 3.1.2 of the permit). In addition, if you are an operator of an airport facility (Sector S) that is subject to the airport effluent limitations guidelines, and are complying with the MSGP Part 8.S.8.1 effluent limitation through the use of non-urea-containing deicers, provide a statement certifying that you do not use pavement deicers containing urea (e.g., "Urea was not used at [name of airport] for pavement deicing in the past year and will also not be used in 2015." (Note: Operators of airport facilities that are complying with Part 8.S.8.1 by meeting the numeric effluent limitation for ammonia do not need to include this statement.)

2. Provide a summary of your past year's quarterly visual assessment documentation (see Part 3.2.2 of the permit).

3. For any four-sample (minimum) average benchmark monitoring exceedance, if after reviewing the selection, design, installation, and implementation of your control measures and considering whether any modifications are necessary to meet the effluent limits in the permit, you determine that no further pollutant reductions are technologically available and economically practicable and achievable in light of best industry practice, provide your rationale for why you believe no further reductions are achievable (see Part 6.2.1.2 of the permit). Enter "NA" if not applicable.

4. Provide a summary of your past year's corrective action documentation (See Part 4.4 of the permit). (Note: If corrective action is not yet completed at the time of submission of this annual report, you must describe the status of any outstanding corrective action(s).) Also describe any incidents of noncompliance in the past year or currently ongoing, or if none, provide a statement that you are in compliance with the permit.

E. Certification Information

I certify under penalty of law that this document and all attachments were prepared under my direction or supervision in accordance with a system designed to assure that qualified personnel properly gathered and evaluated the information submitted. Based on my inquiry of the person or persons who manage the system, or those persons directly responsible for gathering the information, the information submitted is, to the best of my knowledge and belief, true, accurate, and complete. I am aware that there are significant penalties for submitting false information, including the possibility of fine and imprisonment for knowing violations.

First Name, Middle Initial, Last Name:

Title:

Signature: Date: / /

E-mail:

Instructions for Completing the Annual Report Form

Annual Report for Stormwater Discharges Associated with Industrial Activity Under an NPDES General Permit

Who Must File an Annual Report

Operators must submit an Annual Report to EPA electronically, per Part 7.5, by January 30th for each year of permit coverage containing information generated from the past calendar year.

Completing the Form

To complete this form, type or print, using uppercase letters, in the appropriate areas only. Please place each character between the marks. Abbreviate if necessary to stay within the number of characters allowed for each item. Use only one space for breaks between words, but not for punctuation marks unless they are needed to clarify your response. Please submit original document with signature in ink - do not send a photocopied signature.

Section A. Approval to Use Paper Annual Report Form

You must indicate whether you have been granted a waiver from electronic reporting from the EPA Regional Office. Note that you are not authorized to use this paper form unless the EPA Regional Office has approved its use. Where you have obtained approval to use this form, indicate the waiver that you have been granted, the name of the EPA staff person who granted the waiver, and the date that approval was provided. See http://water.epa.gov/polwaste/npdes/stormwater/Stormwater-Contacts.cfm for a list of EPA Regional Office contacts.

Section B. Permit Information

Provide the NPDES ID (i.e., NOI tracking number) assigned to your facility.

Section C. Facility Information

Enter the official or legal name, phone number, and complete street address, including city, state, ZIP code, and county or similar government subdivision, for the facility that is covered by the NPDES ID identified in Section B. If the facility lacks a street address, indicate the general location of the facility (e.g., Intersection of State Highways 61 and 34). Also provide a point of contact name for the facility.

Section D. General Findings

To complete this section you must provide the following information in your annual report:

1. A summary of your past year's routine facility inspection documentation required by Part 3.1.2 of the permit.
2. A summary of your past year's quarterly visual assessment documentation required by Part 3.2.2 of the permit.
3. If, after finding the average of your four monitoring values for any pollutant exceeds the benchmark, you decide no further pollutant reductions are technologically available and economically practicable and achievable in light of best industry practice, your rationale for why you believe no further reductions are achievable.
4. Information copied or summarized from the corrective action documentation required per Part 4.4 (if applicable). If corrective action is not yet completed at the time of submission of this Annual Report, you must describe the status of any outstanding corrective action(s). You must also describe any incidents of noncompliance in the past year or currently ongoing, or if none, provide a statement that you are in compliance with the permit.

Section E. Certification Information

The Annual Report must be signed by a person described below, or by a duly authorized representative of that person.

For a corporation: By a responsible corporate officer. For the purpose of this Section, a responsible corporate officer means:

(i) a president, secretary, treasurer, or vice-president of the corporation in charge of a principal business function, or any other person who performs similar policy- or decision-making functions for the corporation, or (ii) the manager of one or more manufacturing, production, or operating facilities, provided, the manager is authorized to make management decisions which govern the operation of the regulated facility including having the explicit or implicit duty of making major capital investment recommendations, and initiating and directing other comprehensive measures to assure long-term environmental compliance with environmental laws and regulations; the manager can ensure that the necessary systems are established or actions taken to gather complete and accurate information for permit application requirements; and where authority to sign documents has been assigned or delegated to the manager in accordance with corporate procedures.

For a partnership or sole proprietorship: By a general partner or the proprietor, respectively; or

For a municipality, state, federal, or other public agency: By either a principal executive officer or ranking elected official. For purposes of this Part, a principal executive officer of a federal agency includes (i) the chief executive officer of the agency, or (ii) a senior executive officer having responsibility for the overall operations of a principal geographic unit of the agency (e.g., Regional Administrator of EPA). Include the name and title of the person signing the form and the date of signing.

A person is a duly authorized representative only if:

1. The authorization is made in writing by a person described above;

2. The authorization specifies either an individual or a position having responsibility for the overall operation of the regulated facility or activity such as the position of plant manager, operator of a well or a well field, superintendent, position of equivalent responsibility, or an individual or position having overall responsibility for environmental matters for the company, (A duly authorized representative may thus be either a named individual or any individual occupying a named position.) and

3. The written authorization is submitted to the Director.

An unsigned or undated Annual Report form be considered incomplete.

Paperwork Reduction Act Notice

Public reporting burden for this form is estimated to average 2.5 hours per response, including time for reviewing instructions, searching existing data sources, gathering and maintaining the data needed, and completing and reviewing the collection of information. An agency may not conduct or sponsor, and a person is not required to respond to, a collection of information unless it displays a currently valid OMB control number. Send comments regarding the burden estimate, any other aspect of the collection of information, or suggestions for improving this form, including any suggestions which may increase or reduce this burden to: Director, Collection Strategies Division, U.S. Environmental Protection Agency (2822T), 1200 Pennsylvania Ave., NW, Washington, D.C. 20460. Include the OMB control number of this form on any correspondence. Do not send the completed Annual Report form to this address.

Instructions for Completing the Annual Report Form

Annual Report for Stormwater Discharges
Associated with Industrial Activity Under an NPDES General Permit

Submitting Your Form

If you have been granted a waiver from your Regional Office to submit a paper Annual Report form, you must send your Annual Report form by mail to one of the following addresses:

For Regular U.S. Mail Delivery:

Stormwater Notice Processing Center
Mail Code 4203M, ATTN: 2015 MSGP Reports
U.S. EPA
1200 Pennsylvania Avenue, NW
Washington, DC 20460

For Overnight/Express Mail Delivery:

Stormwater Notice Processing Center
William Jefferson Clinton East Building - Room 7420
ATTN: 2015 MSGP Reports
U.S. EPA
1201 Constitution Avenue, NW
Washington, DC 20004

Visit this website for instructions on how to submit electronically:
http://water.epa.gov/polwaste/npdes/stormwater/Stormwater-eNOI-System-for-EPAs-MultiSector-General-Permit.cfm

Appendix J - Calculating Hardness in Freshwater Receiving Waters for Hardness Dependent Metals

Overview

For any sectors required to conduct benchmark samples for a hardness-dependent metal, EPA includes 'hardness ranges' from which benchmark values are determined. To determine which hardness range to use, you must collect data on the hardness of your receiving water(s). Once the site-specific hardness data have been collected, the corresponding benchmark value for each metal is determined by comparing where the hardness data fall within hardness ranges, as shown in Table 1. You only need to determine hardness for your discharges into freshwater as the benchmark values for metals do not vary for discharges to saline waters.

Table 1. ***Hardness Ranges to Be Used to Determine Benchmark Values for Cadmium, Copper, Lead, Nickel, Silver, and Zinc.***

All Units mg/L	Benchmark Values (mg/L, total)					
	Cadmium	Copper	Lead	Nickel	Silver	Zinc
0-24.99 mg/L	0.0005	0.0038	0.014	0.15	0.0007	0.04
25-49.99 mg/L	0.0008	0.0056	0.023	0.20	0.0007	0.05
50-74.99 mg/L	0.0013	0.0090	0.045	0.32	0.0017	0.08
75-99.99 mg/L	0.0018	0.0123	0.069	0.42	0.0030	0.11
100-124.99 mg/L	0.0023	0.0156	0.095	0.52	0.0046	0.13
125-149.99 mg/L	0.0029	0.0189	0.122	0.61	0.0065	0.16
150-174.99 mg/L	0.0034	0.0221	0.151	0.71	0.0087	0.18
175-199.99 mg/L	0.0039	0.0253	0.182	0.80	0.0112	0.20
200-224.99 mg/L	0.0045	0.0285	0.213	0.89	0.0138	0.23
225-249.99 mg/L	0.0050	0.0316	0.246	0.98	0.0168	0.25
250+ mg/L	0.0053	0.0332	0.262	1.02	0.0183	0.26

How to Determine Hardness for Hardness-Dependent Parameters in Freshwater.

You may select one of three methods to determine hardness, including: individual grab sampling, grab sampling by a group of operators which discharge to the same receiving water, or using third-party data. Regardless of the method used, you are responsible for documenting the procedures used for determining hardness values. The hardness value is required to be submitted to EPA with your Notice of Intent (NOI) so that your electronic Discharge Monitoring Report (DMR) which you will submit through NetDMR will include the appropriate limits. You must retain all report and monitoring data in accordance with Part 7.5 of the permit. The three method options for determining hardness are detailed in the following sections.

(1) Permittee Samples for Receiving Stream Hardness

This method involves collecting samples in the receiving water and submitting these to a laboratory for analysis. If you elect to sample your receiving water(s) and submit samples for analysis, hardness must be determined from the closest intermittent or perennial stream downstream of your point of discharge. The sample can be collected during either dry or wet weather. Collection of the sample during wet weather is more representative of conditions

during stormwater discharges; however, collection of in-stream samples during wet weather events may be impracticable or present safety issues.

Hardness must be sampled and analyzed using approved methods as described in 40 CFR Part 136 (Guidelines Establishing Test Procedures for the Analysis of Pollutants).

(2) Group Monitoring for Receiving Stream Hardness

You can be part of a group of permittees discharging to the same receiving waters and collect samples that are representative of the hardness values for all members of the group. In this scenario, hardness of the receiving water must be determined using 40 CFR Part 136 procedures and the results shared by group members. To use the same results, hardness measurements must be taken on a stream reach within a reasonable distance of the discharge points of each of the group members.

(3) Collection of Third-Party Hardness Data

You can submit receiving stream hardness data collected by a third party provided the results are collected consistent with the approved 40 CFR Part 136 methods. These data may come from a local water utility, previously conducted stream reports, TMDLs, peer reviewed literature, other government publications, or data previously collected by the permittee. Data should be less than 10 years old.

Water quality data for many of the nation's surface waters are available on-line or by contacting EPA or a state environmental agency. EPA's data system STORET, short for STOrage and RETrieval, is a repository for receiving water quality, biological, and physical data and is used by state environmental agencies, EPA and other federal agencies, universities, private citizens, and many others. Similarly, state environmental agencies and the U.S. Geological Service (USGS) also have water quality data available that, in some instances, can be accessed online. "Legacy STORET" codes for hardness include: 259 hardness, carbonate; 260 hardness, noncarbonated; and 261 calcium + magnesium, while more recent, "Modern STORET" data codes include: 00900 hardness, 00901 carbonate hardness, and 00902 noncarbonate hardness; or the discrete measurements of calcium (00915) and magnesium (00925) can be used to calculate hardness. Hardness data historically has been reported as "carbonate," "noncarbonate," or "Ca + Mg." If these are unavailable, then individual results for calcium (Ca) and magnesium (Mg) may be used to calculate hardness using the following equation:

$$\text{mg/L } CaCO_3 = 2.497 \text{ (Ca mg/L)} + 4.118 \text{ (Mg mg/L)}$$

When interpreting the data for carbonate and non-carbonate hardness, note that total hardness is equivalent to the sum of carbonate and noncarbonate hardness if both forms are reported. If only carbonate hardness is reported, it is more than likely that noncarbonate hardness is absent and the total hardness is equivalent to the available carbonate hardness.

Appendix K - No Exposure Certification Form

Part 7.1 requires you to use the NPDES eReporting Tool, or "NeT", to prepare and submit your No Exposure Certification (NOE) form. However, if you are given a waiver by the EPA Regional Office to use a paper NOE form, and you elect to use it, you must complete and submit the following form.

NPDES FORM 3510-11	EPA	UNITED STATES ENVIRONMENTAL PROTECTION AGENCY WASHINGTON, DC 20460 NO EXPOSURE CERTIFICATION (NOE) FOR EXCLUSION FROM EPA'S MULTI-SECTOR GENERAL PERMIT FOR STORMWATER DISCHARGES ASSOCIATED WITH INDUSTRIAL ACTIVITY (MSGP)	Form Approved OMB No. 2040-0004

Submission of this No Exposure Certification constitutes notice that the operator identified in Section C does not require permit authorization under EPA's Stormwater Multi Sector General Permit for its stormwater discharges associated with industrial activity from the facility identified in Section D of this form due to the existence of a condition of no exposure.

A condition of no exposure exists at an industrial facility when all industrial materials and activities are protected by a storm resistant shelter to prevent exposure to rain, snow, snowmelt, and/or runoff. Industrial materials or activities include, but are not limited to, material handling equipment or activities, industrial machinery, raw materials, intermediate products, by-products, final products, or waste products. Material handling activities include the storage, loading and unloading, transportation, or conveyance of any raw material, intermediate product, final product or waste product. A storm resistant shelter is not required for the following industrial materials and activities:

- drums, barrels, tanks, and similar containers that are tightly sealed, provided those containers are not deteriorated and do not leak. "Sealed" means banded or otherwise secured and without operational taps or valves;
- adequately maintained vehicles used in material handling; and
- final products, other than products that would be mobilized in stormwater discharges (e.g., rock salt).

A No Exposure Certification must be provided for each facility qualifying for the no exposure exclusion. In addition, the exclusion from NPDES permitting is available on a facility-wide basis only, not for individual outfalls. If any industrial activities or materials are or will be exposed to precipitation, the facility is not eligible for the no exposure exclusion.

By signing and submitting this No Exposure Certification form, the operator in Section C is certifying that a condition of no exposure exists at its facility or site, and is obligated to comply with the terms and conditions of 40 CFR 122.26(g).

A. Approval to Use Paper NOE Form

1. Have you been granted a waiver from electronic reporting from the EPA Regional Office*? ☐ YES ☐ NO

If yes, check which waiver you have been granted, the name of the EPA Regional Office staff person who granted the waiver, and the date of approval:

Waiver granted:
☐ The owner/operator's headquarters is physically located in a geographic area (i.e., ZIP code or census tract) that is identified as under-served for broadband Internet access in the most recent report from the Federal Communications Commission.

☐ The owner/operator has issues regarding available computer access or computer capability.

Name of EPA staff person that granted the waiver: _____

Date approval obtained: __ / __ / ____

*** Note: You are required to obtain approval from the applicable EPA Regional Office prior to using this paper NOE form. If you have not obtained a waiver, you must file this form electronically using the NPDES eReporting Tool (NeT) at http://water.epa.gov/polwaste/npdes/stormwater/Stormwater-eNOI-System-for-EPAs-MultiSector-General-Permit.cfm**

B. Reason for Submission

Select the purpose for filling out this form (check only 1).

☐ **To obtain a new No Exposure Certification.** Fill in Sections C, D, E and F.

☐ **To discontinue an existing No Exposure Certification**. Select this option if you would like to discontinue an existing No Exposure Certification because your facility is no longer subject to regulation under 40 CFR 122.26 (e.g., the facility has ceased the industrial activity that necessitated the No Exposure Certification)*. Provide the following information and fill out Section G.

Provide the existing NPDES ID for the No Exposure Certification that you would like to discontinue: _____

*** Note that if your facility no longer qualifies for the No Exposure Certification because permit coverage is required for exposed industrial materials or activities, you should not check this box, and must instead file for coverage under the Multi-Sector General Permit or an individual permit. Your No Exposure Certification will be automatically discontinued after you obtain coverage under the MSGP or an individual permit.**

C. Facility Operator Information

1. Operator Name: _____

2. Mailing Address

Street: _____

City: _____ State: __ ZIP Code: _____ - ____

3. Phone: ___ - ___ - ____ Ext. ____

4. E-mail: _____

5. Operator Point of Contact Information:

First Name, Middle Initial, Last Name:

Title:

D. Facility Information

1. Facility Name:

2. Facility Address:

Street/Location:

City: State: ZIP Code: -

County or Similar Government Subdivision:

3. Latitude/Longitude for the facility:

Latitude: ___ ___. ___ ___ ___ ___° N (decimal degrees) Longitude: ___ ___ ___. ___ ___ ___ ___° W (decimal degrees)

Latitude/Longitude Data Source: ☐ Map ☐ GPS ☐ Other: _____

If you used a USGS topographic map, what was the scale? _____

Horizontal Reference Datum: ☐ NAD 27 ☐ NAD 83 ☐ WGS 84

4. Is your project/site located on Indian country lands? ☐ YES ☐ NO

If yes, provide the name of the Indian tribe associated with the area of Indian country (including name of Indian reservation, if applicable):

_____

5. Are you a "federal operator" as defined in Appendix A? ☐ YES ☐ NO

6. What is the ownership type of the facility? ☐ Federal Facility (U.S. Government) ☐ Privately Owned Facility ☐ Municipality

☐ County Government ☐ Corporation ☐ State Government ☐ Tribal Government ☐ School District

☐ District ☐ Mixed Ownership (e.g. Public/Private) ☐ Municipal or Water District

7. Have stormwater discharges from your facility been covered previously under an NPDES permit? ☐ YES ☐ NO

If yes, provide the NPDES ID if you had coverage under EPA's MSGP or the NPDES permit number if you had coverage under an EPA individual permit:

8. Has your facility previously been covered by a No Exposure exclusion? ☐ YES ☐ NO

If yes, provide the NPDES ID for your previous No Exposure exclusion:

9. Identify the 4-digit Standard Industrial Classification (SIC) code or 2-letter Activity Code that best represents the products produced or services rendered for which your facility is primarily engaged, as defined in MSGP:

Primary SIC Code: OR **Primary Activity Code**

10. Total size of site associated with industrial activity: _____ (to the nearest quarter acre)

11. Have you paved or roofed over a formerly exposed, pervious area in order to qualify for the no exposure exclusion? ☐ YES ☐ NO

If yes, please indicate approximately how much area was paved or roofed over. Completing this question does not disqualify you for the no exposure exclusion. However, your permitting authority may use this information in considering whether stormwater discharges from your site are likely to have an adverse impact on water quality, in which case you could be required to obtain permit coverage.

☐ Less than one (1) acre ☐ One (1) to five (5) acres ☐ More than five (5) acres

E. Exposure Checklist

Are any of the following materials or activities exposed to precipitation, now or in the foreseeable future?

(Please check either "Yes" or "No" in the appropriate box.) **If you answer "Yes" to any of these questions, you are not eligible for the no exposure exclusion.**

	Yes	No
Using, storing or cleaning industrial machinery or equipment, and areas where residuals from using, storing or cleaning industrial machinery or equipment remain and are exposed to stormwater	☐	☐
Materials or residuals on the ground or in stormwater inlets from spills/leaks	☐	☐
Materials or products from past industrial activity	☐	☐
Material handling equipment (except adequately maintained vehicles)	☐	☐
Materials or products during loading/unloading or transporting activities	☐	☐
Materials or products stored outdoors (except final products intended for outside use [e.g., new cars] where exposure to stormwater does not result in the discharge of pollutants)	☐	☐
Materials contained in open, deteriorated or leaking storage drums, barrels, tanks, and similar containers	☐	☐
Materials or products handled/stored on roads or railways owned or maintained by the discharger	☐	☐
Waste material (except waste in covered, non-leaking containers [e.g., dumpsters])	☐	☐
Application or disposal of process wastewater (unless otherwise permitted)	☐	☐
Particulate matter or visible deposits of residuals from roof stacks and/or vents not otherwise regulated (i.e., under an air quality control permit) and evident in the stormwater outflow	☐	☐

F. Certification Information

I certify under penalty of law that I have read and understand the eligibility requirements for claiming a condition of "no exposure" and obtaining an exclusion from NPDES stormwater permitting.

I certify under penalty of law that there are no discharges of stormwater contaminated by exposure to industrial activities or materials from the industrial facility or site identified in this document (except as allowed under 40 CFR 122.26(g)(2)).

I understand that I am obligated to submit a no exposure certification form once every five years to the NPDES permitting authority and, if requested, to the operator of the local municipal separate storm sewer system (MS4) into which the facility discharges (where applicable). I understand that I must allow the NPDES permitting authority, or MS4 operator where the discharge is into the local MS4, to perform inspections to confirm the condition of no exposure and to make such inspection reports publicly available upon request. I understand that I must obtain coverage under an NPDES permit prior to any point source discharge of stormwater from the facility.

Additionally, I certify under penalty of law that this document and all attachments were prepared under my direction or supervision in accordance with a system designed to assure that qualified personnel properly gathered and evaluated the information submitted. Based on my inquiry of the person or persons who manage the system, or those persons directly responsible for gathering the information, the information submitted is to the best of my knowledge and belief true, accurate and complete. I am aware that there are significant penalties for submitting false information, including the possibility of fine and imprisonment for knowing violations.

First Name, Middle Initial, Last Name: _____ _____

Title: _____

Signature: _____ Date: __ / __ / ____

E-mail: _____

G. Discontinuation of No Exposure Certification Information

I certify under penalty of law that this document and all attachments were prepared under my direction or supervision in accordance with a system designed to assure that qualified personnel properly gathered and evaluated the information submitted. Based on my inquiry of the person or persons who manage the system, or those persons directly responsible for gathering the information, the information submitted is to the best of my knowledge and belief true, accurate and complete. I am aware that there are significant penalties for submitting false information, including the possibility of fine and imprisonment for knowing violations.

First Name, Middle Initial, Last Name: _____ _____

Title: _____

Signature: _____ Date: __ / __ / ____

E-mail: _____

Instructions for Completing EPA Form 3510-11

No Exposure Certification (NOE) for Exclusion from Stormwater Discharges Associated with Industrial Activity Under an NPDES General Permit

NPDES Form Date (06/15) This Form Replaces From 3510-11 (09/08) Form Approved OMB No. 2040-0004

Who May File a No Exposure Certification

Federal law at 40 CFR Part 122.26 prohibits point source discharges of stormwater associated with industrial activity to waters of the U.S. without a National Pollutant Discharge Elimination System (NPDES) permit. However, NPDES permit coverage is not required for discharges of stormwater associated with industrial activities identified at 40 CFR 122.26(b)(14)(i)-(ix) and (xi) if the discharger can certify that a condition of "no exposure" exists at the industrial facility or site.

Stormwater discharges from construction activities identified in 40 CFR 122.26(b)(14)(x) and (b)(15) are not eligible for the no exposure exclusion.

Obtaining and Maintaining the No Exposure Exclusion

This form is used to certify that a condition of no exposure exists at the industrial facility or site described herein. This certification is only applicable in jurisdictions where EPA is the NPDES permitting authority and must be re-submitted at least once every five years.

The industrial facility operator must maintain a condition of no exposure at its facility or site in order for the no exposure exclusion to remain applicable. If conditions change resulting in the exposure of materials and activities to stormwater, the facility operator must obtain coverage under an NPDES stormwater permit immediately.

Completing the Form

You must type or print, using uppercase letters, in appropriate areas only. Enter only one character per space (i.e., between the marks). Abbreviate if necessary to stay within the number of characters allowed for each item. Use one space for breaks between words. One form must be completed for each facility or site for which you are seeking to certify a condition of no exposure. Please make sure you have addressed all applicable questions and have made a photocopy for your records before sending the completed form to the above address.

Section A. Approval to Use Paper NOE Form

You must indicate whether you have been granted a waiver from electronic reporting from the EPA Regional Office. Note that you are not authorized to use this paper No Exposure Certification (NOE) form unless the EPA Regional Office has approved its use. Where you have obtained approval to use this form, indicate the waiver that you have been granted, the name of the EPA Regional Office staff person who granted the waiver, and the date that approval was provided. See http://water.epa.gov/polwaste/npdes/stormwater/Stormwater-Contacts.cfm for a list of EPA Regional Office contacts.

Section B. Reason for Submission

You must check your reason for submitting this form. You may submit this form for obtaining a new No Exposure Certification, for renewing a previous No Exposure Certification, or for discontinuing an existing No Exposure Certification (for facilities that no longer need the exclusion from permit coverage for industrial stormwater discharges).

Section C. Facility Operator Information

Provide the legal name of the person, firm, public organization, or any other entity that operates the facility described in this certification form. An operator of a facility is the legal entity that controls the operation of the facility. Refer to Appendix A of the MSGP for the definition of "operator". Provide the operator's mailing address, phone number, and e-mail. Correspondence for the NOE will be sent to this address. Also provide the name and title for the operator point of contact (note that the point of contact name may be the same as the operator name).

Section D. Facility Information

Enter the official or legal name and complete street address, including city, state, ZIP code, and county or similar government subdivision of the facility. If the facility lacks a street address, indicate the general location of the facility (e.g., Intersection of State Highways 61 and 34). Complete facility information must be provided for permit coverage to be granted.

Provide the latitude and longitude of your facility in decimal degrees format. The latitude and longitude of your facility can be determined in several different ways, including through the use of global positioning system (GPS) receivers and U.S. Geological Survey (U.S.G.S.) topographic or quadrangle maps. Refer to http://transition.fcc.gov/mb/audio/bickel/DDDMMSS-decimal.html/ for assistance in providing the proper latitude/longitude format. For consistency, EPA requests that measurements be taken form the approximate center of the facility. Specify which method you used to determine latitude and longitude. If a U.S.G.S. topographic map is used, specify the scale of the map used. Enter the horizontal reference datum for your latitude and longitude. The horizontal reference datum used on USGS topographic maps is shown on the bottom left corner of USGS topographic maps; it is also available for GPS receivers.

Indicate whether the facility is on Indian country lands, and if so, provide the name of the Indian tribe associated with the area of Indian country (including name of Indian reservation, if applicable).

Indicate whether you are a "federal operator" as defined in Appendix A of the MSGP. Also check the facility's ownership type.

Indicate whether the facility was previously covered under an NPDES stormwater permit. If so, include the NPDES ID (i.e., NOI tracking number).

List the four-digit Standard Industrial Classification (SIC) code or two character activity code that best describes the primary industrial activities performed by your facility.

Enter the total size of the site associated with industrial activity in acres.

Check "Yes" or "No" as appropriate to indicate whether you have paved or roofed over a formerly exposed, pervious area (i.e., lawn, meadow, dirt or gravel road/parking lot) in order to qualify for no exposure. If yes, also indicate approximately how much area was paved or roofed over and is now impervious area.

No Exposure Certification (NOE) for Exclusion from Stormwater Discharges Associated with Industrial Activity Under an NPDES General Permit

NPDES Form Date (06/15) This Form Replaces From 3510-11 (09/08) Form Approved OMB No. 2040-0004

Section E. Exposure Checklist

Check "Yes" or "No" as appropriate to describe the exposure condition at your facility. If you answer "Yes" to **ANY** of the questions in this section, a potential for exposure exists at your site and you cannot certify to a condition of no exposure. You must obtain (or already have) coverage under an NPDES stormwater permit. After obtaining permit coverage, you can institute modifications to eliminate the potential for a discharge of stormwater exposed to industrial activity, and then certify to a condition of no exposure.

Section F and G. Certification Information

The NOE form must be signed as follows:

For a corporation: By a responsible corporate officer. For the purpose of this Section, a responsible corporate officer means:

(i) a president, secretary, treasurer, or vice-president of the corporation in charge of a principal business function, or any other person who performs similar policy- or decision-making functions for the corporation, or (ii) the manager of one or more manufacturing, production, or operating facilities, provided, the manager is authorized to make management decisions which govern the operation of the regulated facility including having the explicit or implicit duty of making major capital investment recommendations, and initiating and directing other comprehensive measures to assure long-term environmental compliance with environmental laws and regulations; the manager can ensure that the necessary systems are established or actions taken to gather complete and accurate information for permit application requirements; and where authority to sign documents has been assigned or delegated to the manager in accordance with corporate procedures.

For a partnership or sole proprietorship: By a general partner or the proprietor, respectively; or

For a municipality, state, federal, or other public agency: By either a principal executive officer or ranking elected official. For purposes of this Part, a principal executive officer of a federal agency includes (i) the chief executive officer of the agency, or (ii) a senior executive officer having responsibility for the overall operations of a principal geographic unit of the agency (e.g., Regional Administrator of EPA). Include the name and title of the person signing the form and the date of signing.

Include the name, title, and email address of the person signing the form and the date of signing.

An unsigned or undated NOE certification will not be considered valid.

Paperwork Reduction Act Notice

Public reporting burden for this certification is estimated to average 1.0 hour per certification, including time for reviewing instructions, searching existing data sources, gathering and maintaining the data needed, and completing and reviewing the collection of information. Burden means the total time, effort, or financial resources expended by persons to generate, maintain, retain, or disclose to provide information to or for a Federal agency. This includes the time needed to review instructions; develop, acquire, install, and utilize technology and systems for the purposes of collecting, validating, and verifying information, processing and maintaining information, and disclosing and providing information; adjust the existing ways to comply with any previously applicable instructions and requirements; train personnel to be able to respond to a collection of information; search data sources; complete and review the collection of information; and transmit or otherwise disclose the information.

An agency may not conduct or sponsor, and a person is not required to respond to, a collection of information unless it displays a currently valid OMB control number.

Send comments regarding the burden estimate, any other aspect of the collection of information, or suggestions for improving this form, including any suggestions which may increase or reduce this burden to: Director, Collection Strategies Division, U.S. Environmental Protection Agency (2822T), 1200 Pennsylvania Ave., NW, Washington, D.C. 20460. Include the OMB control number of this form on any correspondence. Do not send the completed No Exposure Certification form to this address.

Submitting Your Form

If you have been granted a waiver from your Regional Office to submit a paper No Exposure Certification form, you must send your No Exposure Certification form by mail to one of the following addresses:

For Regular U.S. Mail Delivery:

Stormwater Notice Processing Center
Mail Code 4203M, ATTN: MSGP No Exposure
U.S. EPA
1200 Pennsylvania Avenue, NW
Washington, DC 20460

For Overnight/Express Mail Delivery:
Stormwater Notice Processing Center
William Jefferson Clinton East Building - Room 7420
ATTN: MSGP No Exposure
U.S. EPA
1201 Constitution Avenue, NW
Washington, DC 20004

Visit this website for instructions on how to submit electronically: http://water.epa.gov/polwaste/npdes/stormwater/Stormwater-eNOI-System-for-EPAs-MultiSector-General-Permit.cfm

Appendix L - List of Tier 3, Tier 2, and Tier 2.5 Waters

EPA's MSGP has special requirements for discharges to waters designated by a state or tribe as Tier 2/2.5 or Tier 3 for antidegradation purposes under 40 CFR 131.12(a). See Parts 1.1.4.8 and 1.1.4.10

The list below is provided as a resource for operators who must determine whether they discharge to a Tier 2/2.5 or Tier 3 water. Only Tier 2/2.5 or Tier 3 waters specifically identified by a water quality standard authority (e.g., a state, territory, or tribe) are identified in the table below. Many authorities evaluate the existing and protected quality of the receiving water on a pollutant-by-pollutant basis and determine whether water quality is better than the applicable criteria that would be affected by a new discharger or a new source or an increase in an existing discharge of the pollutant. In instances where water quality is better, the authority may choose to allow lower water quality, where lower water quality is determined to be necessary to support important social and economic development. Permittees are not required to identify those waters which are evaluated on an individual basis.

Permit Number	Areas of Coverage/Where EPA Is Permitting Authority	
MAR050000	**Commonwealth of Massachusetts, except Indian Country lands**	
	Tier 2, Tier 2.5, and 3 waters are identified and listed in the Massachusetts Water Quality Standards 314 CMR 4.00. Surface water qualifiers that correspond with Tier classifications are defined at 314 CMR 4.06(1)(d)m and listed in tables and figures at the end of 314 CMR 4.06. See MassDEP's web page at http://www.mass.gov/eea/agencies/massdep/water/regulations/314-cmr-4-00-mass-surface-water-quality-standards.html.	
	Tier 2	Listed as "High Quality Waters", and all wetlands that are not designated as an Outstanding Resource Water
	Tier 2.5	Listed as "Outstanding Resource Water", "Public Water Supply", "Tributary to Public Water Supply", all wetlands bordering Outstanding Resource Waters, and vernal pools
	Tier 3	Defined as "Special Resource Water". Note: No waters have been defined as a Special Resource Water as of the issuance of this permit.
NHR050000	**State of New Hampshire**	
	Tier 2/2.5	There is no list of Tier 2/Tier 2.5 waters. New dischargers and new sources should contact Thelma Murphy (EPA Region 1's stormwater coordinator) at murphy.thelma@epa.gov.
	Tier 3	Env-Ws 1708.05(a) Surface waters of national forests and surface waters designated as "natural" under RSA 483:7-a, I shall be considered outstanding resource waters (ORW). "Natural waters" are listed at http://www.gencourt.state.nh.us/rsa/html/L/483/483-15.htm. Surface waters of national forests are not included in an official list. For further questions, new dischargers and new sources should contact Thelma Murphy (EPA Region 1's stormwater coordinator) at murphy.thelma@epa.gov.

Permit Number	Areas of Coverage/Where EPA Is Permitting Authority	
PRR050000	**Commonwealth of Puerto Rico**	
	Tier 3	Tier III waters are those which are classified as either Class SA or Class SE. Class SA waters are defined as "Coastal waters and estuarine waters of high quality and/or exceptional ecological or recreational value whose existing characteristics shall not be altered, except by natural causes, in order to preserve the existing natural phenomena." Class SA waters include bioluminescent lagoons and bays such as La Parguera and Monsio José on the Southern Coast, Bahía de Mosquito in Vieques, and any other coastal or estuarine waters of exceptional quality of high ecological value or recreational which may be designated by Puerto Rico, through Resolution, as requiring this classification for protection of the waters. Class SE waters are defined as "Surface waters and wetlands of exceptional ecological value, whose existing characteristics should not be altered in order to preserve the existing natural phenomena." Class SE waters include Laguna Tortuguero, Laguna Cartagena and any other surface water bodies of exceptional ecological value as may be designated by Puerto Rico through Resolution.
DCR050000	**District of Columbia**	
	Tier 2/2.5	Rule 1102.4 SPECIAL WATERS OF THE DISTRICT OF COLUMBIA (SWDC): Any segment or segments of the surface waters of the District that are of water quality better than needed for the current use or have scenic or aesthetic importance shall be designated as Special Waters of the District of Columbia (SWDC). Rock Creek and its tributaries and Battery Kemble Creek and its tributaries are considered Special Waters of the District of Columbia (SWDC) under its antidegradation program.
MNR05000I	**Fond du Lac Band of MN Chippewa**	
	Tier 3	Six lakes are presently identified as Tier 3: (1) Dead Fish, (2) Jaskari, (3) Miller (Mud), (4) Perch, (5) Rice Portage, (6) Wild Rice.
	Grand Portage Band of MN Chippewa	
	Tier 2/2.5	All waters, not already classified as Tier 3, are high quality Tier 2 waters. (see Grand Portage Reservation Water Quality Standards, Section VI & VII, Pages 14-16).
	Tier 3	"The portion of Lake Superior north of latitude 47 degrees, 57 minutes, 13 seconds, east of Hat Point, south of the Minnesota-Ontario boundary, and west of the Minnesota-Michigan boundary." (see Section VII, Page 16).
WIR05000I	**Lac du Flambeau Band of the Lake Superior Chippewa**	
	Tier 2	All named waters, including wetlands, not specified under an antidegradation classification.
	Tier 2.5	Bills Lake, Birch Lake, Bobidosh Lake, Bog Lake (SE SE Sec. 31, T40NR6E), Bolton Lake, Broken Bow Lake, Chewalah Lake, Clear Lake (Sec. 2, T39NR4E), Corn Great, Great, Corn Lake, Little "Least/Lesser", Crawling Stone Lake, Big, Crawling Stone Lake, Little, Crescent Lake, Crooked Lake, Big, David Lake, Ellerson Lake, Middle, Ellerson Lake, West, Elsie Lake "Boundary Lake", Fat Lake, Fence Lake, Gresham

Permit Number	Areas of Coverage/Where EPA Is Permitting Authority	
		Creek, Green Lake (NW NW Sec. 19, T41R6E), Grey Lake, Gunlock Lake, Haskell Lake, Headflyer Lake (Sec. 19, T41NR5E), Highway Lake (NW NW Sec. 19, T41NR5E), Horsehead Lake (SE SW Sec. 9, T40NR5E), Hutton's Creek, Ike Walton Lake, Lily Lake (SE SW Sec. 35, T40NR5E), Little Ten Lake, Lodge Lake "L. Rice" (NW NW Sec. 8, T41NR6E), Lucy Lake, Mindys Lake (Sec. 8, T40NR5E), Minette Lake, Mitten Lake, Monk's Lake (Sec. 13, T40NR5E), Moving Cloud Lake, Mud Creek, Muskesin Lake, Patterson Lake, Placid Twin Lake (North), Placid Twin Lake (South), Plummer Lake, Poupart Lake, Prairie Lake (NE SW Sec. 13, T40NR4E), Raven Lake, Ross Allen Lake, Sand Lake, Little, Scott Lake (Sec. 22, T40N, R4E), Shishebogama Lake, Signal Lake, Snort Lake (Sec. 5, T41N, R6E), Spring Lake "Jerms", Squirrel Lake, Statenaker Lake "Hollow", Stearns Lake "Hourglass", Sugarbush "Hidden Lake" (NW NW Sec. 17, T41NR5E), Sugarbush Creek, Sugarbush Lake, Little, Sugarbush Lake, Lower, Sugarbush Lake, Middle, Sugarbush Lake, Upper, Sunfish Lake, Tippecanoe Lake, Tomahawk River, To-To Tom Lake, Toulish Lake, Trout River, Warrior Lake, White Sand Lake, Whitefish Lake "Cattail Lake" (Sec. 34, T40N5R), Wishow Lake, Wyandock Lake
	Tier 3	Bear River (1st bridge to Reservation boundary), Big Springs (Sec. 25, T40NR4E), Black Lake, Cranberry Lake, Doud Lake, Eagle Lake, Gene Lake, Johnson Springs, Little Trout Lake, Lost Lake (Sect. 1, T41NR4E), Mishonagon Creek, Munnomin (Jesse, Duck) Lake, Negani (Hegani) Lake, Reservation Line Lake, Spring Creek, Tank Lake, Thomas Lake, Wild Rice Lake, Zee Lake
	Mole Lake Band of the Lake Superior Tribe of the Chippewa Indians, Sokaogon Chippewa Community	
	Tier 2.9	One Tribal Water, Wetland 22, is classified as Exceptional High Quality Water (EHQW). It is a high-quality water body of significant cultural, religious, social, ecological and recreational attributes.
	Tier 3	All waters in the Sokaogon Chippewa Community (WI) as classified as Tier 3, with one exception (Wetland 22).
COR0500I	**State of Colorado**	
	Ute Mountain Ute Tribe	
	Tier 3	(2010 Proposed) Designations: 1. Ute Spring and unnamed creek from Ute Spring downstream within Section 12, TWP35N R18W (Colorado). 2. Allen Canyon Creek, Sections 17, 20, 29, 30, 31, TWP 35S, R21E (Utah) 3. "Lopez" Spring and unnamed creek tributary to and downstream from the spring, within Section 35, TWP 34N, R18W
NMR050000	**State of New Mexico**	
	Tier 3	(1) Rio Santa Barbara, including the west, middle and east forks from their headwaters downstream to the boundary of the Pecos Wilderness; and (2) the waters within the United States forest service Valle Vidal special management unit including:

Permit Number	Areas of Coverage/Where EPA Is Permitting Authority	
		(a) Rio Costilla, including Comanche, La Cueva, Fernandez, Chuckwagon, Little Costilla, Holman, Gold, Grassy, LaBelle and Vidal creeks, from their headwaters downstream to the boundary of the United States forest service Valle Vidal special management unit; (b) Middle Ponil creek, including the waters of Greenwood Canyon, from their headwaters downstream to the boundary of the Elliott S. Barker wildlife management area; (c) Shuree lakes; (d) North Ponil creek, including McCrystal and Seally Canyon creeks, from their headwaters downstream to the boundary of the United States forest service Valle Vidal special management unit; and (e) Leandro creek from its headwaters downstream to the boundary of the United States forest service Valle Vidal special management unit. (3) the named perennial surface waters of the state, identified in Subparagraph (a) below, located within United States department of agriculture forest service wilderness. Wilderness are those lands designated by the United States congress as wilderness pursuant to the Wilderness Act. Wilderness areas included in this designation are the Aldo Leopold wilderness, Apache Kid wilderness, Blue Range wilderness, Chama River Canyon wilderness, Cruces Basin wilderness, Dome wilderness, Gila wilderness, Latir Peak wilderness, Pecos wilderness, San Pedro Parks wilderness, Wheeler Peak wilderness, and White Mountain wilderness. (a) The following waters are designated in the Rio Grande basin: (i) in the Aldo Leopold wilderness: Byers Run, Circle Seven creek, Flower canyon, Holden Prong, Indian canyon, Las Animas creek, Mud Spring canyon, North Fork Palomas creek, North Seco creek, Pretty canyon, Sids Prong, South Animas canyon, Victorio Park canyon, Water canyon; (ii) in the Apache Kid wilderness Indian creek and Smith canyon; (iii) in the Chama River Canyon wilderness: Chavez canyon, Ojitos canyon, Rio Chama; (iv) in the Cruces Basin wilderness: Beaver creek, Cruces creek, Diablo creek, Escondido creek, Lobo creek, Osha creek; (v) in the Dome wilderness: Capulin creek, Medio creek, Sanchez canyon/creek; (vi) in the Latir Peak wilderness: Bull creek, Bull Creek lake, Heart lake, Lagunitas Fork, Lake Fork creek, Rito del Medio, Rito Primero, West Latir creek; (vii) in the Pecos wilderness: Agua Sarca, Hidden lake, Horseshoe lake (Alamitos), Jose Vigil lake, Nambe lake, Nat lake IV, No Fish lake, North Fork Rio Quemado, Rinconada, Rio Capulin, Rio de las Trampas (Trampas creek), Rio de Truchas, Rio Frijoles, Rio Medio, Rio Molino, Rio Nambe, Rio San Leonardo, Rito con Agua, Rito Gallina, Rito Jaroso, Rito Quemado, San Leonardo lake, Santa Fe lake, Santa Fe river, Serpent lake, South Fork Rio Quemado, Trampas lake (East), Trampas lake (West); (viii) in the San Pedro Parks wilderness: Agua Sarca, Cañon Madera, Cave creek, Cecilia Canyon creek, Clear creek (North SPP), Clear creek (South SPP), Corralitos creek, Dove creek, Jose Miguel creek, La

Permit Number	Areas of Coverage/Where EPA Is Permitting Authority	
		Jara creek, Oso creek, Rio Capulin, Rio de las Vacas, Rio Gallina, Rio Puerco de Chama, Rito Anastacio East, Rito Anastacio West, Rito de las Palomas, Rito de las Perchas, Rito de los Pinos, Rito de los Utes, Rito Leche, Rito Redondo, Rito Resumidero, San Gregorio lake; (ix) in the Wheeler Peak wilderness: Black Copper canyon, East Fork Red river, Elk lake, Horseshoe lake, Lost lake, Sawmill creek, South Fork lake, South Fork Rio Hondo, Williams lake. (b) The following waters are designated in the Pecos River basin: (i) in the Pecos wilderness: Albright creek, Bear creek, Beatty creek, Beaver creek, Carpenter creek, Cascade canyon, Cave creek, El Porvenir creek, Hollinger creek, Holy Ghost creek, Horsethief creek, Jack's creek, Jarosa canyon/creek, Johnson lake, Lake Katherine, Lost Bear lake, Noisy brook, Panchuela creek, Pecos Baldy lake, Pecos river, Rio Mora, Rio Valdez, Rito Azul, Rito de los Chimayosos, Rito de los Esteros, Rito del Oso, Rito del Padre, Rito las Trampas, Rito Maestas, Rito Oscuro, Rito Perro, Rito Sebadilloses, South Fork Bear creek, South Fork Rito Azul, Spirit lake, Stewart lake, Truchas lake (North), Truchas lake (South), Winsor creek; (ii) in the White Mountain wilderness: Argentina creek, Aspen creek, Bonito creek, Little Bonito creek, Mills canyon/creek, Rodamaker creek, South Fork Rio Bonito, Turkey canyon/creek. (c) The following waters are designated in the Gila River basin: (i) in the Aldo Leopold wilderness: Aspen canyon, Black Canyon creek, Bonner canyon, Burnt canyon, Diamond creek, Falls canyon, Fisherman canyon, Running Water canyon, South Diamond creek; (ii) in the Gila wilderness: Apache creek, Black Canyon creek, Brush canyon, Canyon creek, Chicken Coop canyon, Clear creek, Cooper canyon, Cow creek, Cub creek, Diamond creek, East Fork Gila river, Gila river, Gilita creek, Indian creek, Iron creek, Langstroth canyon, Lilley canyon, Little creek, Little Turkey creek, Lookout canyon, McKenna creek, Middle Fork Gila river, Miller Spring canyon, Mogollon creek, Panther canyon, Prior creek, Rain creek, Raw Meat creek, Rocky canyon, Sacaton creek, Sapillo creek, Sheep Corral canyon, Skeleton canyon, Squaw creek, Sycamore canyon, Trail canyon, Trail creek, Trout creek, Turkey creek, Turkey Feather creek, Turnbo canyon, West Fork Gila river, West Fork Mogollon creek, White creek, Willow creek, Woodrow canyon. (d) The following waters are designated in the Canadian River basin: in the Pecos wilderness Daily creek, Johns canyon, Middle Fork Lake of Rio de la Casa, Middle Fork Rio de la Casa, North Fork Lake of Rio de la Casa, Rito de Gascon, Rito San Jose, Sapello river, South Fork Rio de la Casa, Sparks creek (Manuelitas creek). (e) The following waters are designated in the San Francisco River basin: (i) in the Blue Range wilderness: Pueblo creek; (ii) in the Gila wilderness: Big Dry creek, Lipsey canyon, Little Dry creek, Little Whitewater creek, South Fork Whitewater creek, Spider creek, Spruce creek, Whitewater creek.

Permit Number	Areas of Coverage/Where EPA Is Permitting Authority	
		(f) The following waters are designated in the Mimbres Closed basin: in the Aldo Leopold wilderness Corral canyon, Mimbres river, North Fork Mimbres river, South Fork Mimbres river. (g) The following waters are designated in the Tularosa Closed basin: in the White Mountain wilderness Indian creek, Nogal Arroyo, Three Rivers. (h) The wetlands designated are identified on the maps and list of wetlands within United States forest service wilderness areas designated as outstanding national resource waters published at the New Mexico state library and available on the department's website.
CAR05000I	**Hualapai Tribe**	
	Tier 3	Spencer, Meriwhitica, Willow Spring, Upper Milkweed Spring, Bridge Canyon, Travertine Spring, Travertine Falls, Diamond Creek, Diamond Creek Spring, Blue Mountain, Metuck, Peach Springs Spring, Westwater, Clay Tank, Hockey Puck, Pocamote Spring, Mohawk Spring, Granite Spring, Three Spring, Warm Spring, Honga Spring, National Canyon Spring, National Canyon, Moss Spring
	White Mountain Apache Tripe of the Fort Apache Indian Reservation	
	Tier 2/2.5	East Fork White River, above R52 Road, East Fork White River below R52 Road, above Rock Cr., Paradise Creek, above Wohlenberg, Ord Creek, Smith Cienega, Bull Cienega, Smith Creek, Big Bonito , Tonto Creek, below Y47 Crossing, Crooked Creek, Boggy Creek, Lofer Cienego Creek, Little Bonito Creek, above Y55 Crossing, Flash Creek, Squaw Creek, Hurricane Lake, Hurricane Creek, Hughey Creek, Bonito Cienega, West Fork Black River, Hall Cienega, Purcell Cienega, Thompson Creek, Carrizo Creek below Corduroy, Carrizo Creek above Corduroy, Cedar Creek, Big Canyon (E. Cedar Creek), Middle Cedar Creek, West Cedar Creek, Cibecue Creek in Box Canyon to Salt river, Cibecue Creek, Box CallYon up to confluence with Salt Creek, Spring Creek, Salt Creek, Cibecue Creek, from confluence w/Salt Cr, to Big Springs, Cibecue Creek, above Big Springs, Rock Springs Creek, Salt Draw, Canyon Creek S. of Chediski Farms, Willow Creek (Lower Canyon Cr), Oak Creek, Canyon Creek. N. of Chedlski Fanns,
	Tier 3	East Fork While River, in Wilderness Area, Pumpkin Lake
IDR050000	**State of Idaho**	
	For Tier 2 and Tier 3 waters, please consult the Idaho Integrated Report, available at: http://www.deq.idaho.gov/water-quality/surface-water/monitoring-assessment/integrated-report.aspx and the closest regional office of the Idaho Department of Environmental Quality: http://www.deq.idaho.gov/regional-offices-issues.aspx	

Appendix M - Discharge Monitoring Report (DMR) Form

Part 7.1 requires you to use the electronic NetDMR system to prepare and submit your Discharge Monitoring Report (DMR) form. However, if you are given approval by the EPA Regional Office to use a paper DMR form, and you elect to use it, you must complete and submit the following form.

NPDES FORM 6100-29	EPA	UNITED STATES ENVIRONMENTAL PROTECTION AGENCY WASHINGTON, DC 20460 MSGP INDUSTRIAL DISCHARGE MONITORING REPORT (DMR) FORM	Form Approved. OMB No. 2040-0004

A. Approval to Use Paper DMR Form

1. Have you been granted a waiver from electronic reporting from the EPA Regional Office*? ☐ YES ☐ NO

If yes, check which waiver you have been granted, the name of the EPA Regional Office staff person who granted the waiver, and the date of approval:

Waiver granted:

☐ The owner/operator's headquarters is physically located in a geographic area (i.e., ZIP code or census tract) that is identified as under-served for broadband Internet access in the most recent report from the Federal Communications Commission.

☐ The owner/operator has issues regarding available computer access or computer capability.

Name of EPA staff person that granted the waiver: _____

Date approval obtained: __ / __ / ____

*** Note: You are required to obtain approval from the applicable EPA Regional Office prior to using this paper DMR form. If you have not obtained a waiver, you must file this form electronically using the NetDMR at http://www.epa.gov/netdmr/**

B. Permit Information

1. NPDES ID: _____

2. Reason(s) for Submission (Check all that apply):

☐ Submitting monitoring data (Fill in all Sections).

☐ Reporting no discharge for all outfalls for this monitoring period (Fill in Sections A, B, C, D, E.1, and G).

☐ Reporting that your site status has changed to inactive and unstaffed (Fill in Sections A, B, C, D, and F and include date of status change in comment field in Section F.4).

☐ Reporting that your site status has changed to active (Fill in all Sections and include date of status change in comment field in Section F.4).

☐ Reporting that no further pollutant reductions are achievable for all outffalls and for all pollutants via Part 6.2.1.2 of the MSGP (Fill in Sections A, B, C, D, and G).

C. Facility Operator Information

1. Operator Information

Operator Name: _____

Mailing Address:

Street: _____

City: _____ State: __ ZIP Code: _____ - ____

Phone: ___ - ___ - ____ Ext. ____

E-mail: _____

2. DMR Preparer (Complete if DMR was prepared by someone other than the certifier):

First Name, Middle Initial, Last Name: _____ __ _____

Organization: _____

Phone: ___ - ___ - ____ Ext. ____

E-mail: _____

D. Facility Information

1. Facility Name:

2. Facility Address:

Street/Location:

City: State: ZIP Code: -

County or Similar Government Subdivision:

E. Discharge Information

1. Identify monitoring period:

☐ Check here if proposing alternative monitoring periods due to irregular stormwater runoff. Identify alternative monitoring schedule and indicate for which alternative monitoring period you are reporting monitoring data:

☐ Quarter 1 (January 1 – March 31) ☐ Quarter 1: From / To /

☐ Quarter 2 (April 1 – June 30) ☐ Quarter 2: From / To /

☐ Quarter 3 (July 1 – September 30) ☐ Quarter 3: From / To /

☐ Quarter 4 (October 1 – December 31) ☐ Quarter 4: From / To /

2. Are you required to monitor for cadmium, copper, chromium, lead, nickel, silver, or zinc in freshwater? ☐ Yes (Skip to 3) ☐ No (Skip to 4)

3. What is the hardness level of the receiving water? (mg/L)

4. Does your facility discharge into any saltwater receiving waters? ☐ Yes ☐ No

UNITED STATES ENVIRONMENTAL PROTECTION AGENCY
WASHINGTON, DC 20460
MSGP INDUSTRIAL DISCHARGE MONITORING REPORT (DMR)

Form Approved. OMB No. 2040-0004

F. Monitoring Information

Note: Make additional copies of this form as necessary.

1. Nature of Discharge: ☐ Rainfall (Complete line items 2.a., 2.b., & 2.c.) ☐ Snowmelt

2.a. Duration of the rainfall event (hours): ☐☐ 2.b. Rainfall amount (inches): ☐☐.☐ 2.c. Time since previous measurable storm event (days): ☐☐☐

3.a. Outfall ID (list the same 3-digit outfalls identified on the NOI form)	3.b. Check if Any Outfalls are Substantially Identical to Other Outfalls Listed	3.c. Check if No Discharge	3.d. Monitoring Type QBM, ELG, S/T, I, O*	3.e. Parameter	3.f. Quality or Concentration	3.g. Units	3.h. Results Description	3.i. Collection Date	3.j. Exceedance due to natural background pollutant levels	3.k. No further pollutant reductions achievable?
		☐							☐	☐
	☐ Substantially identical to outfall:_____	☐							☐	☐
	☐ Substantially identical to outfall:_____	☐							☐	☐
	☐ Substantially identical to outfall:_____	☐							☐	☐
	☐ Substantially identical to outfall:_____	☐							☐	☐
	☐ Substantially identical to outfall:_____	☐							☐	☐
	☐ Substantially identical to outfall:_____	☐							☐	☐
	☐ Substantially identical to outfall:_____	☐							☐	☐

* (QBM) - Quarterly benchmark monitoring; (ELG) - Annual effluent limitations guidelines monitoring; (S/T) - State- or tribal-specific monitoring; (I) - Impaired waters monitoring; (O) -Other monitoring as required by EPA

4. Comment and/or Explanation of Any Violations (Reference all attachments here)

G. Certification

I certify under penalty of law that this document and all attachments were prepared under my direction or supervision in accordance with a system designed to assure that qualified personnel properly gathered and evaluated the information submitted. Based on my inquiry of the person or persons who manage the system, or those persons directly responsible for gathering the information, the information submitted is, to the best of my knowledge and belief, true, accurate, and complete. I am aware that there are significant penalties for submitting false information, including the possibility of fine and imprisonment for knowing violations.

First Name, Middle Initial, Last Name:

Title:

Signature: _____ Date: / /

E-mail:

Instructions for Completing EPA Form 6100-29

Discharge Monitoring Report (DMR) for Stormwater Discharges Associated with Industrial Activity Under the NPDES Multi-Sector General Permit

NPDES Form Date (06/15) Form Approved OMB No. 2040-0004

Who Must Submit A Discharge Monitoring Report to EPA?

Facilities covered under the Multi-Sector General Permit (MSGP or permit) that are required to monitor pursuant to Parts 6.2 and 8 of the permit must submit Discharge Monitoring Reports (DMRs) consistent with the reporting requirements specified in Part 7.1 of the permit.

Completing the Form

Obtain and read a copy of the 2015 MSGP, viewable at http://water.epa.gov/polwaste/npdes/stormwater/EPA-Multi-Sector-General-Permit-MSGP.cfm. To complete this form, type or print, using uppercase letters, in the appropriate areas only. Please place each character between the marks. Abbreviate if necessary to stay within the number of characters allowed for each item. Use only one space for breaks between words, but not for punctuation marks unless they are needed to clarify your response. Please submit original document with signature in ink - do not send a photocopied signature. **Photocopy your DMR form for your records before you send the completed original form to the appropriate address.**

Section A. Approval to Use Paper DMR Form

You must indicate whether you have been granted a waiver from electronic reporting from the EPA Regional Office. Note that you are not authorized to use this paper DMR form unless the EPA Regional Office has approved its use. Where you have obtained approval to use this form, indicate the waiver that you have been granted, the name of the EPA staff person who granted the waiver, and the date that approval was provided. See http://water.epa.gov/polwaste/npdes/stormwater/EPA-Multi-Sector-General-Permit-MSGP.cfm for a list of EPA Regional Office contacts.

Section B. Permit Information

Provide the NPDES ID (i.e., NOI tracking number) assigned to the facility for which this DMR is being submitted.

Indicate your reason(s) for submitting this DMR by checking all boxes that apply. The reasons for submission are defined as follows:

- *Submitting monitoring data*: For each storm sampled, submit one DMR form with data for all outfalls sampled. Select this reason even if you only have monitoring data for some of your outfalls (i.e., some outfalls did not discharge). If you select this reason you are required to complete all Sections of the form.
- *Reporting no discharge for all outfalls for this monitoring period*: Indicates that there were no discharges from all outfalls during this monitoring period. If you select this reason you are only required to complete Sections A, B, C, D, E.1, and G.
- *Reporting that your site status has changed to inactive and unstaffed*: Indicates that your facility is currently inactive and unstaffed (See Part 6.2.1.3 of the permit for more information). If you select this reason you are only required to complete Sections A, B, C, D, and F and include date of status change in comment field in Section F.4
- *Reporting that your site status has changed from inactive to active*: Indicates that your facility is currently active (See Part 6.2.1.3 of the permit for more information). If you select this reason you are required to complete all Sections of the form and include date of status change in the comment field in Section F.4.
- *Reporting that no further reductions are achievable for all outfalls and for all pollutants via Part 6.2.1.2 of the permit*: Indicates that you have determined that no further pollutant reductions are technologically and economically practicable in light of best industry practice to meet the technology-based effluent limits or are necessary to meet the water-quality-based effluent limitations in Parts 2 of the permit (See Part 6.2.1.2 of the permit for more information). If you select this reason you are required to complete Sections A, B, C, D and G. However, if you can make this finding for some outfalls and pollutants, but not for others, you cannot select this reason; you will instead be able to identify which outfalls and which pollutants you can make this finding for in Section F.

Section C. Facility Operator Information.

Provide the legal name of the person, firm, public organization, or any other entity that operates the facility for which this DMR is being submitted. An operator of a facility is the legal entity that controls the operation of the facility. Refer to Appendix A of the permit for the definition of "operator". Provide the operator's mailing address, phone number, and e-mail. The operator information in this Section should match the operator information provided on your NOI form.

Provide the name, organization, phone number, an email address for the person who prepared this DMR form.

Section D. Facility Information

Enter the official or legal name and complete street address, including city, state, ZIP code, and county or similar government subdivision of the facility. If the facility lacks a street address, indicate the general location of the facility (e.g., Intersection of State Highways 61 and 34). Complete facility information must be provided for permit coverage to be granted. The facility information in this Section should match the facility information provided on your NOI form.

Section E. Discharge Information.

Indicate the appropriate monitoring period (Quarter 1, 2, 3, or 4) covered by the DMR. "Alternative" monitoring periods can apply to facilities located in arid and semi-arid climates, or in areas subject to snow or prolonged freezing. To use alternative monitoring periods, you must provide a revised monitoring schedule here. If using alternative monitoring periods, identify the first day of the monitoring period through the last day of the monitoring period for each of the four periods. The dates should be displayed as month (Mo) / day (Day). See Parts 6.1.6 and 6.1.7 of the permit for more information.

If you are submitting benchmark monitoring data, identify if your facility is required to collect benchmark samples for one or more hardness-dependent metals (i.e., cadmium, copper, lead, nickel, silver, and zinc). If you select "yes" to this question provide the hardness level of the receiving water (in mg/L)). If you select "no" to this question, you must identify if your facility discharges into any saltwater receiving waters.

F. Monitoring Information

For the reported monitoring event indicate whether the discharge was from a rainfall or snowmelt event. If you select "rainfall" then indicate the duration (in hours) of the rainfall event, rainfall total (in inches) for that rainfall event, and time (in days) since the previous measurable storm event in line items 2.a-c. For both rainfall and snowmelt monitoring, you must identify the date of collection for the monitoring event in column 3.i. of the table. If the discharge occurs during a period of both rainfall and snowmelt, check both the rainfall and snowmelt boxes and report the appropriate rainfall information in item 2.a-c. To report multiple monitoring events in the same reporting period, copy this form and enter each monitoring event separately with data for all outfalls sampled.

Identify all the outfalls from your facility that discharge stormwater. Each outfall must be assigned a unique 3-digit number (e.g., 001, 002, 003), and should match the outfalls identified on your NOI form.

If any outfalls are substantially identical, check the box in 3.b and identify the outfall that the outfall in 3.a is substantially identical to. In 3.d – k, you only need to provide benchmark monitoring data for one of the outfalls.

For any outfall for which there was no discharge during the monitoring period, check the box in 3.

In 3.d, identify the type of monitoring using the specified codes, in parentheses, below:

- (QBM) – Quarterly benchmark monitoring
- (ELG) – Annual effluent limitations guidelines monitoring;
- (S/T) – State- or Tribal-specific monitoring;
- (I) – Impaired waters monitoring; or
- (O) – Other monitoring as required by EPA.

In 3.e, enter each "parameter" (or "pollutant") monitored. For QBM and ELG monitoring, use the same parameter name as in Part 8 of the permit.

In 3.f., enter a sample measurement value for each parameter analyzed and required to be reported. Enter "ND" (i.e., not detected) for any sample results below the method detection limit or "BQL" (i.e., below quantitation limit) for sample results above the detection limit but below the quantitation limit.

In 3.g., enter the units for sample measurement values (i.e., "mg/L" for milligrams per liter) for each parameter analyzed and required to be reported. For monitoring results reported as ND or BQL this space will be left blank and the units will be reported in Column 3.f.

3.h. must be completed for any monitoring results reported as ND or BQL in the "Quality or Concentration" column. For ND, report the laboratory detection level and units in this column. For BQL, report the laboratory quantitation limit and units in this column.

In 3.i. identify the sampling date for each parameter monitoring result reported on this form.

3.h. *Exceedance due to natural background pollutant levels:* Check box if following the first 4 quarters of benchmark monitoring (or sooner if the exceedance is triggered by less than 4 quarters of data) you have determined that the exceedance of the benchmark is attributable solely to the presence of that pollutant in the natural background for that outfall and any substantially identical outfalls, or for impaired waters monitoring, the presence of the pollutant is caused solely by natural background. See Part 6.2.1.2 and 6.2.4.1 of the permit for more information.

In 3.j .check the box if after collection of 4 quarterly samples (or sooner if the exceedance is triggered by less than 4 quarters of data), the average of the 4 monitoring values for any parameter exceeds the benchmark and you have made the determination that no further pollutant reductions are technologically available and economically practicable and achievable in light of best industry practice to meet the technology-based effluent limits or are necessary to meet the water-quality-based effluent

Where violations of the permit requirements are reported, include a brief explanation to describe the cause and corrective actions taken, and reference each violation by date. Also, this section should include any additional comments such as are required when changing site status from inactive and unstaffed to active or vice versa. Attach additional pages if you need more space.

Attach additional copies of Section F as necessary to address all outfalls and parameters.

Section G. Certification Information

DMRs must be signed by a person described below, or by a duly authorized representative of that person.

For a corporation: By a responsible corporate officer. For the purpose of this Section, a responsible corporate officer means:

(i) a president, secretary, treasurer, or vice-president of the corporation in charge of a principal business function, or any other person who performs similar policy- or decision-making functions for the corporation, or (ii) the manager of one or more manufacturing, production, or operating facilities, provided, the manager is authorized to make management decisions which govern the operation of the regulated facility including having the explicit or implicit duty of making major capital investment recommendations, and initiating and directing other comprehensive measures to assure long-term environmental compliance with environmental laws and regulations; the manager can ensure that the necessary systems are established or actions taken to gather complete and accurate information for permit application requirements; and where authority to sign documents has been assigned or delegated to the manager in accordance with corporate procedures.

For a partnership or sole proprietorship: By a general partner or the proprietor, respectively; or

For a municipality, state, federal, or other public agency: By either a principal executive officer or ranking elected official. For purposes of this Part, a principal executive officer of a federal agency includes (i) the chief executive officer of the agency, or (ii) a senior executive officer having responsibility for the overall operations of a principal geographic unit of the agency (e.g., Regional Administrator of EPA). Include the name and title of the person signing the form and the date of signing.

Discharge Monitoring Report (DMR) for Stormwater Discharges Associated with Industrial Activity Under the NPDES Multi-Sector General Permit

NPDES Form Date (06/15) Form Approved OMB No. 2040-0004

A person is a duly authorized representative only if:

1. The authorization is made in writing by a person described above;

2. The authorization specifies either an individual or a position having responsibility for the overall operation of the regulated facility or activity such as the position of plant manager, operator of a well or a well field, superintendent, position of equivalent responsibility, or an individual or position having overall responsibility for environmental matters for the company, (A duly authorized representative may thus be either a named individual or any individual occupying a named position.) and

3. The written authorization is submitted to the Director.

An unsigned or undated DMR form be considered incomplete.

Paperwork Reduction Act Notice

Public reporting burden for this form is estimated to average 7.25 hours per response, including time for reviewing instructions, searching existing data sources, gathering and maintaining the data needed, and completing and reviewing the collection of information. An agency may not conduct or sponsor, and a person is not required to respond to, a collection of information unless it displays a currently valid OMB control number. Send comments regarding the burden estimate, any other aspect of the collection of information, or suggestions for improving this form, including any suggestions which may increase or reduce this burden to: Director, Collection Strategies Division, U.S. Environmental Protection Agency (2822T), 1200 Pennsylvania Ave., NW, Washington, D.C. 20460. Include the OMB control number of this form on any correspondence. Do not send the completed DMR form to this address.

Submitting Your Form

If you have been granted a waiver from your Regional Office to submit a paper DMR form, you must send your DMR form by mail to one of the following addresses:

Region 1
MSGP Discharge Monitoring Reports (OES4-SMR)
EPA New England, Region 1
5 Post Office Square - Suite 100
Boston, MA 02109-3912

Region 2
MSGP Discharge Monitoring Reports
290 Broadway
DECA/CAPBS/DMT
21st Floor
New York, NY, 10007-1866

Region 3
Nancy Ford
U.S. EPA Region 3
1650 Arch Street
Mail Code #3WP60
Philadelphia, PA 19103

Region 5
U.S. Environmental Protection Agency Region 5
77 West Jackson Boulevard (WN-16J)
Chicago, Illinois 60604
Attn: Brian Bell - Storm Water Coordinator

Region 6
U.S. EPA, Region 6 MSGP DMRs
Water Enforcement Branch (6EN-WC)
1445 Ross Avenue
Dallas, TX 75202

Region 7
Neal Gilbert
U.S. Environmental Protection Agency, Region 7
Enforcement Coordination Office
11201 Renner Blvd
Lenexa, KS 66219

Region 8
U.S. EPA, Region 8 (ENF-PJ)
Attention: DMR Coordinator
1595 Wynkoop Street
Denver, CO 80202-1129

Region 9
Sandra Chew
U.S. EPA Region 9
Information Management Section, ENF-4-1
75 Hawthorne Street
San Francisco, CA 94105

Region 10
U.S. EPA Region 10
Attn: NPDES Data Manager, OCE-101
1200 Sixth Avenue, Suite 900
Seattle, WA 98101

Visit this website for instructions on how to submit electronically:
http://water.epa.gov/polwaste/npdes/stormwater/Stormwater-eNOI-System-for-EPAs-MultiSector-General-Permit.cfm

Appendix N - List of SIC and NAICS Codes

Sector A. Timber Products					
Sub-sector	**SIC Codes**		**NAICS Codes**		**Notes**
A3	**2411**	Logging (log storage and handling activities only; wet deck storage areas only authorized if no chemical additives are used in the spray water or applied to the logs.)	**113310**	Logging	
A1	**2421**	General Sawmills and Planing Mills (sawmills)	**321113**	Sawmills	
		(lumber manufacturing from purchased lumber, softwood cut stock, wood lath, fence pickets, and planing mill products)	**321912**	Cut Stock, Resawing Lumber, and Planing	
		(softwood flooring)	**321918**	Other Millwork (including Flooring)	
		(box lumber made from purchased lumber)	**321920**	Wood Container and Pallet Manufacturing	
		(kiln drying)	**321999**	All Other Miscellaneous Wood Product Manufacturing	
A4	**2426**	Hardwood Dimension and Flooring Mills (hardwood dimension lumber made from logs or bolts)	**321113**	Sawmills	
		(hardwood cut stock, resawing hardwood lumber, and planing purchased hardwood lumber except flooring)	**321912**	Cut Stock, Resawing Lumber, and Planing	
		(hardwood flooring)	**321918**	Other Millwork (including Flooring)	
		(wood furniture frames and finished furniture parts)	**337215**	Showcase, Partition, Shelving, and Locker Manufacturing	
	2429	Special Product Sawmills, Not Elsewhere Classified (shingle mills, shakes)	**321113**	Sawmills	
		(stave manufacturing from purchased lumber)	**321912**	Cut Stock, Resawing Lumber, and Planing	
		(cooperage stock)	**321920**	Wood Container and Pallet Manufacturing	
		(excelsior)	**321999**	All Other Miscellaneous Wood Product Manufacturing	

	2431	Millwork (wood windows and doors)	**321911**	Wood Window and Door Manufacturing	
		(except wood windows and doors)	**321918**	Other Millwork (including Flooring)	
	2435	Hardwood Veneer and Plywood	**321211**	Hardwood Veneer and Plywood Manufacturing	
	2436	Softwood Veneer and Plywood	**321212**	Softwood Veneer and Plywood Manufacturing	
	2439	Structural Wood Members, Not Elsewhere Classified (except trusses)	**321213**	Engineered Wood Member (except Truss) Manufacturing	
		(trusses)	**321214**	Truss Manufacturing	
A5	**2441**	Nailed and Lock Corner Wood Boxes and Shook	**321920**	Wood Container and Pallet Manufacturing	
A4	**2448**	Wood Pallets and Skids	**321920**	Wood Container and Pallet Manufacturing	
	2449	Wood Containers, Not Elsewhere Classified	**321920**	Wood Container and Pallet Manufacturing	
	2451	Mobil Homes	**321991**	Manufactured Home (Mobil Home) Manufacturing	
	2452	Prefabricated Wood Buildings and Components	**321992**	Prefabricated Wood Building Manufacturing	
A2	**2491**	Wood Preserving	**321114**	Wood Preservation	
A4	**2493**	Reconstituted Wood Products	**321219**	Reconstituted Wood Product Manufacturing	
	2499	Wood Products, Not Elsewhere Classified (wood containers, such as noncoopered vats and reed or straw baskets)	**321920**	Wood Container and Pallet Manufacturing	
		(except wood containers, wood cooling towers, cork life preservers, mirror or picture frames, and laundry hampers of reed, rattan, and willow)	**321999**	All Other Miscellaneous Wood Product Manufacturing	
		(wood cooling towers)	**333415**	Air-Conditioning and Warm Air Heating Equipment and Commercial and Industrial Refrigeration Equipment Manufacturing	
		(laundry hampers of reed, rattan, and willow)	**337125**	Household Furniture (except Wood and Metal) Manufacturing	
		(cork life preservers)	**339113**	Surgical Appliance and Supplies Manufacturing	
		(mirror and picture frames)	**339999**	All Other Miscellaneous Manufacturing	

Sector B. Paper and Allied Products Manufacturing

Sub-sector	SIC Codes		NAICS Codes		Notes
B2	**2611**	Pulp Mills (pulp producing mills only)	**322110**	Pulp Mills	
		(producing paper except newsprint)	**322121**	Paper (except Newsprint) Mills	
		(producing newsprint)	**322122**	Newsprint Mills	
		(producing paperboard)	**322130**	Paperboard Mills	
	2621	Paper Mills (except newsprint mills)	**322121**	Paper (except Newsprint) Mills	
		(newsprint mills)	**322122**	Newsprint Mills	
B1	**2631**	Paperboard Mills	**322130**	Paperboard Mills	
B2	**2652**	Setup Paperboard Boxes	**322213**	Setup Paperboard Box Manufacturing	
	2653	Corrugated and Solid Fiber Boxes	**322211**	Corrugated and Solid Fiber Boxes Manufacturing	
	2655	Fiber Cans, Tubes, Drums, and Similar Products	**322214**	Fiber Can, Tube, Drum, and Similar Products Manufacturing	
	2656	Sanitary Food Containers, Except Folding	**322215**	Nonfolding Sanitary Food Container Manufacturing	
	2657	Folding Paperwork Boxes	**322212**	Folding Paperboard Box Manufacturing	
	2671	Packaging Paper and Plastics Film, Coated and Laminated			
		(except single-web and multi-web plastics packaging film and sheets)	**322221**	Coated and Laminated Packaging Paper and Plastics Film Manufacturing	
		(single-web and multi-web plastics packaging film and sheets)	**326112**	Plastics Packaging Film and Sheet (including Laminated) Manufacturing	Any facility whose primary activity is manufacturing single-web and multi-web plastics packaging film and sheets (SIC 2671 / NAICS 326112) should be regulated under Sector Y, but may continue to be regulated under Sector B, or alternatively, under Sector AD. Sectors Y, B, and AD do not have specific requirements for facilities manufacturing single-web and multi-web plastics packaging film and sheets. However, under Sector AD EPA could establish additional facility-specific monitoring and reporting requirements. Regulatory burden would not differ between Sectors B and Y.
	2672	Coated and Laminated Paper, NEC	**322222**	Coated and Laminated Paper Manufacturing	

	2673	Plastics, Foil, and Coated Paper Bags (except single-web or multi-web plastics bags)	**322223**	Plastics, Foil, and Coated Paper Bags Manufacturing	
		(single-web and multi-web plastics bags)	**326111**	Plastics Bag Manufacturing	Any facility whose primary activity is manufacturing single-web and multi-web plastics bags (SIC 2673 / NAICS 326111) should be regulated under Sector Y, but may continue to be regulated under Sector B, or alternatively, under Sector AD. Sectors Y, B, and AD do not have specific requirements for facilities manufacturing single-web and multi-web plastics bags. However, under Sector AD EPA could establish additional facility-specific monitoring and reporting requirements. Regulatory burden would not differ between Sectors B and Y.
	2674	Uncoated Paper and Multiwall Bags	**322224**	Uncoated Paper and Multiwall Bags Manufacturing	
	2675	Die Cut Paper and Paperboard and Cardboard (pasted, lined, laminated, or surface-coated paperboard)	**322226**	Surface-Coated Paperboard Manufacturing	
		(die cut paper and paperboard office supplies, such as file folders, tabulating cards, and report covers)	**322231**	Die Cut Paper and Paperboard Office Supplies Manufacturing	
		(except pasted, lined, laminated, or surface-coated paperboard and die-cut paper and paperboard office supplies)	**322299**	All Other Converted Paper Product Manufacturing	
	2676	Sanitary Paper Products	**322291**	Sanitary Paper Product Manufacturing	
	2677	Envelopes	**322232**	Envelope Manufacturing	
	2678	Stationery, Tablets, and Related Products	**322233**	Stationery, Tablets, and Related Product Manufacturing	
	2679	Converted Paper and Paperboard Products, NEC (corrugated paper)	**322211**	Corrugated and Solid Fiber Box Manufacturing	
		(wallpaper and gift wrap paper)	**322222**	Coated and Laminated Paper Manufacturing	
		(paper supplies for business machines, such as adding machine tape, and other paper office supplies)	**322231**	Die Cut Paper and Paperboard Office Supplies Manufacturing	

		(except corrugated paper, wall paper, gift wrap paper, paper supplies for business machines, and other paper office supplies)	**322299**	All Other Converted Paper Product Manufacturing	

Sector C. Chemical and Allied Products Manufacturing

Sub-sector	SIC Codes		NAICS Codes		Notes
C2	**2812**	Alkalies and Chlorine	**325181**	Alkalies and Chlorine Manufacturing	
	2813	Industrial Gases	**325120**	Industrial Gas Manufacturing	
	2816	Inorganic Pigments (except bone and lamp black)	**325131**	Inorganic Dye and Pigment Manufacturing	
		(bone and lamp black)	**325182**	Carbon Black Manufacturing	
	2819	Industrial Inorganic Chemicals, Not Elsewhere Classified (recovering sulfur from natural gas)	**211112**	Natural Gas Liquid Extraction	
		(inorganic dyes)	**325131**	Inorganic Dye and Pigment Manufacturing	
		(other)	**325131**	All Other Basic Inorganic Chemical Manufacturing	
		(activated carbon and charcoal)	**325998**	All Other Miscellaneous Chemical Product and Preparation Manufacturing	
		(alumina)	**331311**	Alumina Refining	Any facility whose primary activity is alumina refining (NAICS 331311) should be regulated under Sector F, but may continue to be regulated under Sector C. Sector C requires sector/subsector specific benchmark monitoring for total aluminum, total iron, and nitrate plus nitrite nitrogen. Sector F applies additional technology-based effluent limits comprised of good housekeeping measures; additional SWPPP requirements; and additional inspection requirements. Regulatory burdens differ between Sectors C and F but determining which sector would be more burdensome would depend on the regulated facility.
C4	**2821**	Plastics Materials, Synthetic Resins, and Nonvulcanizable Elastomers	**325211**	Plastics Material and Resin Manufacturing	
	2822	Synthetic Rubber	**325212**	Synthetic Rubber Manufacturing	

	2823	Cellulosic Manmade Fibers	**325221**	Cellulosic Organic Fiber Manufacturing	
	2824	Manmade Organic Fibers, Except Cellulosic	**325222**	Noncellulosic Organic Fiber Manufacturing	
C5	**2833**	Medicinal Chemicals and Botanical Products	**325411**	Medicinal and Botanical Manufacturing	
	2834	Pharmaceutical Preparations	**325412**	Pharmaceutical Preparation Manufacturing	
	2835	In Vitro and In Vivo Diagnostic Substances (except in vitro diagnostic)	**325412**	Pharmaceutical Preparation Manufacturing	
		(in vitro diagnostic substances)	**325413**	In Vitro Diagnostic Substance Manufacturing	
	2836	Biological Products, Except Diagnostic Substances	**325414**	Biological Product (except Diagnostic) Manufacturing	
C3	**2841**	Soaps and Other Detergents, Except Specialty Cleaners	**325611**	Soap and Other Detergent Manufacturing	
	2842	Specialty Cleaning, Polishing, and Sanitation Preparations	**325612**	Polish and Other Sanitation Good Manufacturing	
	2843	Surface Active Agents, Finishing Agents, Sulfonated Oils, and Assistants	**325613**	Surface Active Agent Manufacturing	
	2844	Perfumes, Cosmetics, and Other Toilet Preparations (toothpaste, gel and dentifrice powders)	**325611**	Soap and Other Detergent Manufacturing	
		(except toothpaste, gel and dentifrice powders)	**325620**	Toilet Preparation Manufacturing	
C5	**2851**	Paints, Varnishes, Lacquers, Enamels, and Allied Products	**325510**	Paint and Coating Manufacturing	
	2861	Gum and Wood Chemicals	**325191**	Gum and Wood Chemical Manufacturing	
	2865	Cyclic Organic Crudes and Intermediates, and Organic Dyes and Pigments (aromatics)	**325110**	Petrochemical Manufacturing	
		(organic dyes and pigments)	**325132**	Synthetic Organic Dye and Pigment Manufacturing	
		(except aromatics and organic dyes and pigments)	**325192**	Cyclic Crude and Intermediate Manufacturing	
	2869	Industrial Organic Chemicals, Not Elsewhere Classified (aliphatics)	**325110**	Petrochemical Manufacturing	
		(fluorocarbon gases)	**325120**	Industrial Gas Manufacturing	
		(carbon bisulfide)	**325188**	All Other Basic Inorganic Chemical Manufacturing	

		(cyclopropane, diethylcyclohexane, naphthalene sulfonic acid)	**325192**	Cyclic Crude and Intermediate Manufacturing	
		(ethyl alcohol)	**325193**	Ethyl Alcohol Manufacturing	
		(except aliphatics, carbon bisulfide, ethyl alcohol, cyclopropane, diethylcyclohexane, napthalene sulfonic acid, synthetic hydraulic fluids, and fluorocarbon gases)	**325199**	All Other Basic Organic Chemical Manufacturing	
		(synthetic hydraulic fluids)	**325998**	All Other Miscellaneous Chemical Product and Preparation Manufacturing	
C1	**2873**	Nitrogenous Fertilizers	**325311**	Nitrogenous Fertilizer Manufacturing	
	2874	Phosphatic Fertilizers	**325312**	Phosphatic Fertilizer Manufacturing	
	2875	Fertilizers, Mixing Only	**325314**	Fertilizers (Mixing Only) Manufacturing	
	2879	Pesticides and Agricultural Chemicals, NEC	**325320**	Pesticides and Other Agricultural Chemical Manufacturing	
C5	**2891**	Adhesives and Sealants	**325520**	Adhesive Manufacturing	
	2892	Explosives	**325920**	Explosives Manufacturing	
	2893	Printing Ink	**325910**	Printing Ink Manufacturing	
	2895	Carbon Black	**325182**	Carbon Black Manufacturing	
	2899	Chemicals and Chemical Preparations, NEC (table salt)	**311942**	Spice and Extract Manufacturing (table salt only)	
		(fatty acids)	**325199**	All Other Basic Organic Chemical Manufacturing	
		(frit and plastic wood fillers)	**325510**	Paint and Coating Manufacturing	
		(except frit, plastic wood fillers, fatty acids, and table salt)	**325998**	All Other Miscellaneous Chemical Product and Preparation Manufacturing	
	2911	Petroleum Refining	**324110**	Petroleum Refineries	
	3952	Lead Pencils, Crayons, and Artists' Materials (limited to inks and paints, including china painting enamels) (drawing inks and india ink)	**325998**	All Other Miscellaneous Chemical Product and Preparation Manufacturing	
		(china painting enamels, platinum paint for burnt wood or leather work, paints for china painting, artist's paints, and artist's watercolors)	**339942**	Lead Pencil and Art Good Manufacturing	

Sector D. Asphalt Paving and Roofing Materials Manufacturers and Lubricant Manufacturers

Sub-sector	SIC Codes		NAICS Codes		Notes
D1	2951	Asphalt Paving Mixtures and Blocks	324121	Asphalt Paving Mixture and Block Manufacturing	
	2952	Asphalt Felt and Coatings	324122	Asphalt Shingle and Coating Materials Manufacturing	
D2	2992	Lubricating Oils and Greases	324191	Petroleum Lubricating Oil and Grease Manufacturing	
	2999	Products of Petroleum and Coal, Not Elsewhere Classified	324199	All Other Petroleum and Coal Products Manufacturing	

Sector E. Glass, Clay, Cement, Concrete, and Gypsum Product Manufacturing

Sub-sector	SIC Codes		NAICS Codes		Notes
E3	3211	Flat Glass	327211	Flat Glass Manufacturing	
	3221	Glass Containers	327213	Glass Container Manufacturing	
	3229	Pressed and Blown Glass and Glassware, Not Elsewhere Classified	327212	Other Pressed and Blown Glass and Glassware Manufacturing	
	3231	Glass Product Manufacturing Made of Purchased Glass	327215	Glass Product Manufacturing Made of Purchased Glass	
	3241	Hydraulic Cement	327310	Cement Manufacturing	
E1	3251	Brick and Structural Clay Tile (except slumped brick)	327121	Brick and Structural Clay Tile Manufacturing	
		(slumped brick)	327331	Concrete Block and Brick Manufacturing	
	3253	Ceramic Wall and Floor Tile	327122	Ceramic Wall and Floor Tile Manufacturing	
	3255	Clay Refractories	327124	Clay Refractory Manufacturing	
	3259	Structural Clay Products, Not Elsewhere Classified	327123	Other Structural Clay Product Manufacturing	
	3261	Vitreous China Plumbing Fixtures and China and Earthenware Fittings and Bathroom Accessories	327111	Vitreous China Plumbing Fixture and China and Earthenware Bathroom Accessories Manufacturing	
	3262	Vitreous China Table and Kitchen Articles	327112	Vitreous China, Fine Earthenware, and Other Pottery Product Manufacturing	
	3263	Fine Earthenware (Whiteware) Table and Kitchen Articles	327112	Vitreous China, Fine Earthenware, and Other Pottery Product Manufacturing	
	3264	Porcelain Electrical Supplies	327113	Porcelain Electrical Supply Manufacturing	
	3269	Pottery Products, Not Elsewhere Classified	327112	Vitreous China, Fine Earthenware, and Other Pottery Product Manufacturing	

E2	**3271**	Concrete Block and Brick	**327331**	Concrete Block and Brick Manufacturing	
	3272	Concrete Products, Except Block and Brick (concrete pipe)	**327332**	Concrete Pipe Manufacturing	
		(concrete products, except dry mix concrete and pipe)	**327390**	Other Concrete Product Manufacturing	
		(dry mixture concrete)	**327999**	All Other Miscellaneous Nonmetallic Mineral Product Manufacturing	
	3273	Ready-Mixed Concrete	**327320**	Ready-Mix Concrete Manufacturing	
	3274	Lime Manufacturing Calcium hydroxide (i.e., hydrated lime) manufacturing	**327410**	Lime Manufacturing	
		Calcium oxide (i.e., quicklime) manufacturing	**327410**	Lime Manufacturing	
		Dolomite, dead-burned, manufacturing	**327410**	Lime Manufacturing	
		Hydrated lime (i.e., calcium hydroxide) manufacturing	**327410**	Lime Manufacturing	
		Quicklime (i.e., calcium oxide) manufacturing	**327410**	Lime Manufacturing	
		Agricultural lime manufacturing	**327410**	Lime Manufacturing	
		Dolomitic lime manufacturing	**327410**	Lime Manufacturing	
	3275	Gypsum Products	**327420**	Gypsum Product Manufacturing	
E3	**3281**	Cut Stone and Stone Products	**327991**	Cut Stone and Stone Product Manufacturing	
	3291	Abrasive Products (except steel wool manufacturing)	**327910**	Abrasive Product Manufacturing	
		(steel wool manufacturing)	**332999**	All Other Miscellaneous Fabricated Metal Product Manufacturing	Any facility whose primary activity is steel wool manufacturing (NAICS 332999) should be regulated under Sector AA, but may continue to be regulated under Sector E. Sector AA applies additional technology-based effluent limits comprised of good housekeeping measures, spill prevention and response procedures, and spills and leaks; additional SWPPP requirements; and additional inspection requirements. Sector E applies additional technology-based effluent limits comprised of good housekeeping measures, and additional SWPPP requirements.

					Regulatory burden would likely be greater under Sector AA.
	3292	Asbestos Products (except brake pads and linings)	**327999**	All Other Miscellaneous Nonmetallic Mineral Product Manufacturing	
		(asbestos brake linings and pads)	**336340**	Motor Vehicle Brake System Manufacturing	
		(asbestos clutch facings, motor vehicle)	**336350**	Motor Vehicle Transmission and Power Train Parts Manufacturing	
	3295	Minerals and Earths, Ground or Otherwise Treated (grinding, washing, separating, etc. of kaolin and ball clay)	**212324**	Kaolin and Ball Clay Mining	
		(grinding, washing, separating, etc. of clay, ceramic, and refractory minerals not elsewhere classified)	**212325**	Clay and Ceramic and Refractory Minerals Mining	
		(grinding, washing, separating, etc. of chemical and fertilizer minerals, not elsewhere classified)	**212393**	Other Chemical and Fertilizer Mineral Mining	
		(grinding, washing, separating, etc. of nonmetallic minerals, not elsewhere classified)	**212399**	All Other Nonmetallic Mineral Mining	
		(except grinding, washing, separating, etc. of nonmetallic minerals)	**327992**	Ground or Treated Mineral and Earth Manufacturing	
	3296	Mineral Wool	**327993**	Mineral Wool Manufacturing	
	3297	Nonclay Refractories	**327125**	Nonclay Refractory Manufacturing	
	3299	Nonmetallic Mineral Products, Not Elsewhere Classified (clay statuary)	**327112**	Vitreous China, Fine Earthenware, and Other Pottery Product Manufacturing	
		(moldings, ornamental and architectural plaster work, and gypsum statuary)	**327420**	Gypsum Product Manufacturing	
		(except moldings, ornamental and architectural plaster work, clay statuary, and gypsum statuary)	**327999**	All Other Miscellaneous Nonmetallic Mineral Product Manufacturing	

Sector F. Primary Metals

Sub-sector	SIC Codes		NAICS Codes		Notes
F1	**3312**	Steel Works, Blast Furnaces (Including Coke Ovens), and Rolling Mills			

		(coke oven products [e.g., coke, gases, tars] made in coke oven establishments)	**324199**	All Other Petroleum and Coal Products Manufacturing	Any facility whose primary activity is manufacturing coke oven products (e.g., coke, gases, tars) made in coke oven establishments should be regulated under Sector D, but may continue to be regulated under Sector F. Sector F requires sector-specific benchmark monitoring requirements for total aluminum and total zinc, Sector D does not require benchmark monitoring from these facilities. Regulatory burden would be greater under Sector F.
		(except coke ovens not integrated with steel mills and hot-rolling purchased steel)	**331111**	Iron and Steel Mills	
		(hot-rolling purchased steel)	**331221**	Rolled Steel Shape Manufacturing	
	3313	Electrometallurigcal Products, Except Steel	**331112**	Electrometallurigcal Ferroalloy Product Manufacturing	
	3315	Steel Wiredrawing and Steel Nails and Spikes (steel wire drawing)	**331222**	Steel Wire Drawing	
	3316	Cold-Rolled Steel Sheet, Strip, and Bars	**331221**	Rolled Steel Shape Manufacturing	
	3317	Steel Pipe and Tubes	**331210**	Iron and Steel Pipe and Tube Manufacturing from Purchased Steel	
F2	**3321**	Gray and Ductile Iron Foundries	**331511**	Iron Foundries	
	3322	Malleable Iron Foundries	**331511**	Iron Foundries	
	3324	Steel Investment Foundries	**331512**	Steel Investment Foundries	
	3325	Steel Foundries, NEC	**331513**	Steel Foundries (except Investment)	
F5	**3331**	Primary Smelting and Refining of Copper	**331411**	Primary Smelting and Refining of Copper	
	3334	Primary Production of Aluminum	**331312**	Primary Aluminum Production	
	3339	Primary Smelting and Refining of Nonferrous Metals, Except Copper and Aluminum	**331419**	Primary Smelting and Refining of Nonferrous Metal (except Copper and Aluminum)	
	3341	Secondary Smelting and Refining of Nonferrous Metals (aluminum)	**331314**	Secondary Smelting and Alloying of Aluminum	
		(copper)	**331423**	Secondary Smelting, Refining and Alloying of Copper	

		(except copper and aluminum)	**331492**	Secondary Smelting, Refining and Alloying of Nonferrous Metal (except Copper and Aluminum)	
F3	**3351**	Rolling, Drawing, and Extruding of Copper	**331421**	Copper Rolling, Drawing, and Extruding	
	3353	Aluminum Sheet, Plate, and Foil	**331315**	Aluminum Sheet, Plate, and Foil Manufacturing	
	3354	Aluminum Extruded Products	**331316**	Aluminum Extruded Product Manufacturing	
	3355	Aluminum Rolling and Drawing, Not Elsewhere Classified	**331319**	Other Aluminum Rolling and Drawing	
	3356	Rolling, Drawing, and Extruding of Nonferrous Metals, Except Copper and Aluminum	**331491**	Nonferrous Metal (Except Copper and Aluminum) Rolling, Drawing, and Extruding	
	3357	Drawing and Insulating of Nonferrous Wire (aluminum wire drawing)	**331319**	Other Aluminum Rolling and Drawing	
		(copper wire drawing)	**331422**	Copper Wire (except Mechanical) Drawing	
		(wire drawing except copper or aluminum)	**331491**	Nonferrous Metal (except Copper and Aluminum) Rolling, Drawing, and Extruding	
		(fiber optic cable-insulating only)	**335921**	Fiber Optic Cable Manufacturing	
		(communication and energy wire, except fiber optic-insulating only)	**335929**	Other Communication and Energy Wire Manufacturing	
F4	**3363**	Aluminum Die Castings	**331521**	Aluminum Die Casting Foundries	
	3364	Nonferrous Die Castings, Except Aluminum	**331522**	Nonferrous (Except Aluminum) Die Casting Foundries	
	3365	Aluminum Foundries	**331524**	Aluminum Foundries (Except Die-Casting)	
	3366	Copper Foundries	**331525**	Copper Foundries (Except Die-Casting)	
	3369	Nonferrous Foundries, Except Copper and Aluminum	**331528**	Other Nonferrous Foundries (Except Die-Casting)	
F5	**3398**	Metal Heat Treating	**332811**	Metal Heat Treating	
	3399	Primary Metal Products, Not Elsewhere Classified (iron ore recovery from open hearth slag)	**331111**	Iron and Steel Mills	
		(ferrous powder, paste, flakes, etc.)	**331221**	Rolled Steel Shape Manufacturing	
		(aluminum powder, paste, flakes, etc.)	**331314**	Secondary Smelting and Alloying of Aluminum	
		(copper powder, paste, flakes, etc.)	**331423**	Secondary Smelting, Refining, and Alloying of Copper	
		(nonferrous powder, paste, flakes, etc. except copper and aluminum)	**331492**	Secondary Smelting, Refining, and Alloying of Nonferrous Metal (except Copper and Aluminum)	
		(nonferrous nails, brads, staples, tacks, etc. made from purchased nonferrous wire)	**332618**	Other Fabricated Wire Product Manufacturing	

Sector G. Metal Mining (Ore Mining and Dressing)

Sub-sector	SIC Codes		NAICS Codes		Notes
G1	1021	Copper Ores	212234	Copper Ore and Nickel Ore Mining	
G2	1011	Iron Ores	212210	Iron Ore Mining	
	1021	Copper Ores	212234	Copper Ore and Nickel Ore Mining	
	1031	Lead and Zinc Ores	212231	Lead Ore and Zinc Ore Mining	
	1041	Gold Ores	212221	Gold Ore Mining	
	1044	Silver Ores	212222	Silver Ore Mining	
	1061	Ferroalloy Ores, Except Vanadium (nickel)	212234	Copper Ore and Nickel Ore Mining	
		(other ferroalloys except nickel)	212299	All Other Metal Ore Mining	
	1081	Metal Mining Services (except site preparation and related activities performed on a contract or fee basis and geophysical surveying and mapping)	213114	Support Activities for Metal Mining	
		(site preparation and related construction activities on a contract basis)	238910	Site Preparation Contractors	
	1094	Uranium-Radium-Vanadium Ores	212291	Uranium-Radium-Vanadium Ore Mining	
	1099	Miscellaneous Metal Ores, Not Elsewhere Classified	212299	All Other Metal Ore Mining	

Sector H. Coal Mines and Coal Mining-Related Facilities

Sub-sector	SIC Codes		NAICS Codes		Notes
H1	1221	Bituminous Coal and Lignite Surface Mining	212111	Bituminous Coal and Lignite Surface Mining	
	1222	Bituminous Coal Underground Mining	212112	Bituminous Coal Underground Mining	
	1231	Anthracite Mining	212113	Anthracite Mining	
	1241	Coal Mining Services (except site preparation and related construction activities on a contract basis)	213113	Support Activities for Coal Mining	
		(site preparation and related construction activities on a contract basis)	238910	Site Preparation Contractors	

Sector I. Oil and Gas Extraction

Sub-sector	SIC Codes		NAICS Codes		Notes
I1	1311	Crude Petroleum and Natural Gas	211111	Crude Petroleum and Natural Gas Extraction	
	1321	Natural Gas Liquids	211112	Natural Gas Liquid Extraction	
	1381	Drilling Oil and Gas Wells	213111	Drilling Oil and Gas Wells	
	1382	Oil and Gas Field Exploration Services	213112	Support Activities for Oil and Gas Operations	
	1389	Oil and Gas Field Services, Not Elsewhere Classified (except construction of field gathering lines, site preparation and related construction activities performed on a contract or fee basis)	213112	Support Activities for Oil and Gas Operations	
		(construction of field gathering lines on a contract or fee basis)	237120	Oil and Gas Pipeline and Related Structures Construction	
		(site preparation and related construction activities on a contract basis)	238910	Site Preparation Contractors	

Sector J. Mineral Mining and Dressing

Sub-sector	SIC Codes		NAICS Codes		Notes
J2	1411	Dimension Stone	212311	Dimension Stone Mining and Quarrying	
	1422	Crushed and Broken Limestone	212312	Crushed and Broken Limestone Mining and Quarrying	
	1423	Crushed and Broken Granite	212313	Crushed and Broken Granite Mining and Quarrying	
	1429	Crushed and Broken Stone, Not Elsewhere Classified	212319	Other Crushed and Broken Stone Mining and Quarrying	
J1	1442	Construction Sand and Gravel	212321	Construction Sand and Gravel Mining	
	1446	Industrial Sand	212322	Industrial Sand Mining	
J3	1455	Kaolin and Ball Clay	212324	Kaolin and Ball Clay Mining	
	1459	Clay, Ceramic, and Refractory Minerals, Not Elsewhere Classified	212325	Clay, Ceramic, and Refractory Minerals Mining	
	1474	Potash, Soda, and Borate Minerals	212391	Potash, Soda, and Borate Mineral Mining	
	1475	Phosphate Rock	212392	Phosphate Rock Mining	
	1479	Chemical and Fertilizer Mineral Mining, Not Elsewhere Classified	212393	Other Chemical and Fertilizer Mineral Mining	
J2	1481	Nonmetallic Minerals Services, Except Fuels			

		(except geophysical surveying and mapping and site preparation and related construction activities performed on a contract or fee basis)	**213115**	Support Activities for Nonmetallic Minerals (except Fuels)	
		(site preparation and related construction activities on a contract basis)	**238910**	Site Preparation Contractors	
	1499	Miscellaneous Nonmetallic Minerals, Except Fuels			
		(except bituminous limestone and bituminous sandstone)	**212399**	All Other Nonmetallic Mineral Mining	

Sector K. Hazardous Waste Treatment, Storage or Disposal Facilities

Sub-Sector	Activity Code	Narrative Description	Notes
K1	**HZ**	• Hazardous waste treatment • Hazardous waste storage • Hazardous waste disposal • Hazardous waste facilities operating under interim status • Hazardous waste facilities operating under a permit under Subtitle C of RCRA	HZ is the Activity Code (i.e., non-SIC / non-NAICS designation) for this Sector. It potentially applies to any facility regardless of SIC / NAICS Code, in addition to these specifically related to hazardous waste: • SIC 4953 Refuse Systems (hazardous waste treatment and disposal); • NAICS 562211 Hazardous Waste Treatment and Disposal; • NAICS 562112 Hazardous Waste Collection (hazardous waste transfer stations).

Sector L. Landfills and Land Application Sites

Sub-Sector	Activity Code	Narrative Description	Notes
L1	**LF**	• All Landfill, Land Application Sites and Open Dumps	LF is the Activity Code (i.e., non-SIC and non-NAICS designation) for this Sector. It may apply to any facility / SIC Code / NAICS Code, in addition to these specifically related to landfills and landfill application sites: • SIC 4953 Refuse Systems (solid waste landfills); • NAICS 562212 Solid Waste Landfill. Industrial waste is waste from any of the facilities covered by the MSGP (also described in 40 CFR 122.26(b)(14)).
L2	**LF**	All Landfill, Land Application Sites and Open Dumps, except Municipal Solid Waste Landfill (MSWLF) Areas Closed in Accordance with 40 CFR 258.	

Sector M. Automobile Salvage Yards

Sub-sector	SIC Codes		NAICS Codes		Notes
M1	**5015**	Motor Vehicle Parts, Used (merchant wholesalers except those selling via retail method)	**423140**	Motor Vehicle Parts (Used) Merchant Wholesalers	

Sector N. Scrap Recycling Facilities

Sub-sector	SIC Codes		NAICS Codes		Notes
N1	**5093**	Scrap and Waste Materials (merchant wholesalers except Source-Separated Recycling)	**423930**	Recyclable Material Merchant Wholesalers	
N2	**5093**	Scrap and Waste Materials (Source-Separated Recycling)	**423930**	Recyclable Material Merchant Wholesalers	

Sector O. Steam Electric Generating Facilities

Sub-Sector	Activity Code	Narrative Description	Notes
O1	**SE**	• steam electric power generation using coal, including coal handling areas • steam electric power generation using natural gas • steam electric power generation using oil • steam electric power generation using nuclear energy • steam electric power generation using any other fuel to produce a steam source • coal pile runoff (includes effluent limitations established by 40 CFR 423) • dual fuel co-generation (i.e., steam generation using fossil fuel to augment a heat-capture generation system)	SE is the Activity Code (i.e., non-SIC and non-NAICS designation) for this Sector. It may apply to any facility / SIC Code / NAICS Code, in addition to these specifically related to steam electric generation: • SIC 4911 Electric Services (fossil fuel power generation, nuclear electric power generation & other electric power generation) • NAICS 221112 Fossil Fuel Electric Power Generation • NAICS 221113 Nuclear Electric Power Generation

Sector P. Land Transportation

Sub-sector	SIC Codes		NAICS Codes		Notes
P1	**4011**	Railroads, Line-Haul Operating	**482111**	Line-Haul Railroads	
	4013	Railroad Switching and Terminal Establishments (short line railroads)	**482112**	Short Line Railroads	
		(except short line railroads)	**488210**	Support Activities for Rail Transportation	
	4111	Local and Suburban Transit (mixed mode)	**485111**	Mixed Mode Transit Systems	
		(commuter rail)	**485112**	Commuter Rail Systems	
		(bus and motor vehicle)	**485113**	Bus and Other Motor Vehicle Transit Systems	
		(except mixed mode, commuter rail, airport transportation service, and bus and motor vehicle)	**485119**	Other Urban Transit Systems	
		(airport transportation service)	**485999**	All Other Transit and Ground Passenger Transportation	
	4119	Local Passenger Transportation, Not Elsewhere Classified			

		(limousine rental with driver and automobile rental with driver)	**485320**	Limousine Service	
		(employee transportation)	**485410**	School and Employee Bus Transportation	
		(special needs transportation)	**485991**	Special Needs Transportation	
		(hearse rental with driver and carpool and vanpool operation)	**485999**	All Other Transit and Ground Passenger Transportation	
		(sightseeing buses and cable and cog railways, except scenic)	**487110**	Scenic and Sightseeing Transportation, Land	
		(land ambulance)	**621910**	Ambulance Services	
	4121	Taxicabs	**485310**	Taxi Service	
	4131	Intercity and Rural Bus Transportation	**485210**	Interurban and Rural Bus Transportation	
	4141	Local Bus Charter Service	**485510**	Charter Bus Industry	
	4142	Bus Charter Service, Except Local	**485510**	Charter Bus Industry	
	4151	School Buses	**485410**	School and Employee Bus Transportation	
	4173	Terminal and Service Facilities for Motor Vehicle Passenger Transportation	**488490**	Other Support Activities for Road Transportation	
	4212	Local Trucking Without Storage (general freight)	**484110**	General Freight Trucking, Local	
		(household goods moving)	**484210**	Used Household and Office Goods Moving	
		(specialized freight)	**484220**	Specialized Freight (except Used Goods) Trucking, Local	
		(solid waste collection without disposal)	**562111**	Solid Waste Collection	
		(hazardous waste collection without disposal)	**562112**	Hazardous Waste Collection	
		(other waste collection without disposal)	**562119**	Other Waste Collection	
	4213	Trucking, Except Local (general freight, truckload)	**484121**	General Freight Trucking, Long-Distance, Truckload	
		(general freight, less than truckload)	**484122**	General Freight Trucking, Long-Distance, Less Than Truckload	
		(household goods moving)	**484210**	Used Household and Office Goods Moving	
		(specialized freight)	**484230**	Specialized Freight (except Used Goods) Trucking, Long-Distance	
	4214	Local Trucking With Storage (general freight)	**484110**	General Freight Trucking, Local	
		(household goods moving)	**484210**	Used Household and Office Goods Moving	
		(specialized freight)	**484220**	Specialized Freight (except Used Goods) Trucking, Local	

	4215	Courier Services, Except by Air (hub and spoke intercity delivery)	**492110**	Couriers	
		(local delivery)	**492210**	Local Messengers and local Delivery	
	4226	Special Warehousing and Storage, Not Elsewhere Classified (warehousing in foreign trade zones)	**493110**	General Warehousing and Storage	
		(fur storage)	**493120**	Refrigerated Warehousing and Storage	
		(except fur storage and warehousing in foreign trade zones)	**493190**	Other Warehousing and Storage	
	4231	Terminal and Joint Terminal Maintenance Facilities for Motor Freight Transportation	**488490**	Other Support Activities for Road Transportation	
	4311	United States Postal Service	**491110**	Postal Service	
	5171	Petroleum Bulk Stations and Terminals (except petroleum sold via retail method)	**424710**	Petroleum Bulk Stations and Terminals	
		(heating oil sold to final consumer)	**454311**	Heating Oil Dealers	
		(LP gas sold to final consumer)	**454312**	Liquefied Petroleum Gas (Bottled Gas) Dealers	

Sector Q. Water Transportation

Sub-sector	SIC Codes		NAICS Codes		Notes
Q1	**4412**	Deep Sea Foreign Transportation of Freight	**483111**	Deep Sea Freight Transportation	
	4424	Deep Sea Domestic Transportation of Freight	**483113**	Coastal and Great Lakes Freight Transportation	
	4432	Freight Transportation on the Great Lakes - St. Lawrence Seaway	**483113**	Coastal and Great Lakes Freight Transportation	
	4449	Water Transportation of Freight, Not Elsewhere Classified	**483211**	Inland Water Freight Transportation	
	4481	Deep Sea Transportation of Passengers, Except by Ferry (deep sea activities)	**483112**	Deep Sea Passenger Transportation	
		(coastal activities)	**483114**	Coastal and Great Lakes Passenger Transportation	
	4482	Ferries (coastal and Great Lakes)	**483114**	Coastal and Great Lakes Passenger Transportation	
		(inland)	**483212**	Inland Water Passenger Transportation	

	4489	Water Transportation of Passengers, Not Elsewhere Classified (water taxis)	**483212**	Inland Water Passenger Transportation	
		(airboats, excursion boats, and sightseeing boats)	**487210**	Scenic and Sightseeing Transportation, Water	
	4491	Marine Cargo Handling (dock and pier operations)	**488310**	Port and Harbor Operations	
		(all but dock and pier operations)	**488320**	Marine Cargo Handling	
	4492	Towing and Tugboat Services	**488330**	Navigational Services to Shipping	
	4493	Marinas	**713930**	Marinas	
	4499	Water Transportation Services, Not Elsewhere Classified (lighterage)	**483211**	Inland Water Freight Transportation	
		(lighthouse and canal operations)	**488310**	Port and Harbor Operations	
		(piloting vessels in and out of harbors and marine salvage)	**488330**	Navigational Services to Shipping	
		(all but lighthouse operations, piloting vessels in and out of harbors, boat and ship rental, marine salvage, lighterage, marine surveyor services, and canal operations)	**488390**	Other Support Activities for Water Transportation	
		(boat and ship rental, commercial)	**532411**	Commercial Air, Rail, and Water Transportation Equipment Rental and Leasing	

Sector R. Ship and Boat Building and Repair Yards

Sub-sector	SIC Codes		NAICS Codes		Notes
R1	**3731**	Ship Building and Repairing (except repairs in floating drydocks)	**336611**	Ship Building and Repairing	
		(repair services provided by floating drydocks)	**488390**	Other Support Activities for Water Transportation (includes ship scaling facilities)	
	3732	Boat Building and Repairing (boat building)	**336612**	Boat Building	
		(pleasure boat repair and maintenance services without retailing new boats)	**811490**	Other Personal and Household Goods Repair and Maintenance	
		(ship scaling)	**488390**	Other Support Activities for Water Transportation (drydocks, floating [i.e., routine repair and maintenance of ships]; other support activities for water transportation; ship dismantling at floating drydock; ship scaling services not done at a shipyard)	
		(motorboat [i.e., inboard and outboard] repair and maintenance	**811490**	Other Personal and Household Goods Repair and Maintenance	

		services; outboard motor repair shops)			

Sector S. Air Transportation Facilities

Sub-sector	SIC Codes		NAICS Codes		Notes
S1	**4512**	Air Transportation, Scheduled (passenger)	**481111**	Scheduled Passenger Air Transportation	
		(freight)	**481112**	Scheduled Freight Air Transportation	
	4513	Air Courier Services	**492110**	Couriers	
	4522	Air Transportation, Nonscheduled (passenger)	**481211**	Nonscheduled Chartered Passenger Air Transportation	
		(freight)	**481212**	Nonscheduled Chartered Freight Air Transportation	
		(using general purpose aircraft for a variety of passenger, freight, courier, and other uses)	**481219**	Other Nonscheduled Air Transportation	
		(sightseeing planes)	**487990**	Scenic and Sightseeing Transportation, Other	
		(air ambulance)	**621910**	Ambulance Services	
	4581	Airports, Flying Fields, and Airport Terminal Services (air freight handling at airports, hangar operations, airport terminal services, aircraft storage, airports, and flying fields)	**488119**	Other Airport Operations	
		(aircraft servicing and repairing)	**488190**	Other Support Activities for Air Transportation	

Sector T. Treatment Works

Sub-sector	Activity Code	Narrative Description	Notes
T1	TW	• treatment works with a design flow of 1.0 MGD or more treating domestic sewage or any other sewage sludge; • wastewater treatment devices or system used by the treatment works for the storage, treatment, recycling and reclamation of municipal or domestic sewage; • land located within the confines of the treatment works that is dedicated to the disposal of sewage sludge; • treatment works required to have an approved pretreatment program under 40 CFR Part 403	TW is the Activity Code (i.e., non-SIC and non-NAICS designation) for this Sector. It may apply to any facility / SIC Code / NAICS Code, in addition to these specifically related to treatment works: • SIC 4952 Sewerage Systems • NAICS 221320 Sewage Treatment Facilities

Sector U. Food and Kindred Products

Sub-sector	SIC Codes		NAICS Codes		Notes
U3	2011	Meat Packing Plants	311611	Animal (except Poultry) Slaughtering	
	2013	Sausages and Other Prepared Meat Products (except lard made from purchased materials)	311612	Meat Processed from Carcasses	
		(lard made from purchased materials)	311613	Rendering and Meat Byproduct Processing	
	2015	Poultry Slaughtering and Processing (poultry slaughtering and processing)	311615	Poultry Processing	
		(egg processing)	311999	All Other Miscellaneous Food Manufacturing	
	2021	Creamery Butter	311512	Creamery Butter Manufacturing	
	2022	Natural, Processed, and Imitation Cheese	311513	Cheese Manufacturing	
	2023	Dry, Condensed and Evaporated Dairy Products (liquid non-dairy creamer)	311511	Fluid Milk Manufacturing	
		(except liquid non-dairy creamer)	311514	Dry, Condensed, and Evaporated Dairy Product Manufacturing	
	2024	Ice Cream and Frozen Deserts	311520	Ice Cream and Frozen Desert Manufacturing	
	2026	Fluid Milk (except ultra-high temperature)	311511	Fluid Milk Manufacturing	
		(ultra-high temperature)	311514	Dry, Condensed, and Evaporated Dairy Product Manufacturing	
	2032	Canned Specialties (except canned puddings)	311422	Specialty Canning	
		(canned puddings)	311999	All Other Miscellaneous Food Manufacturing	
	2033	Canned Fruits, Vegetables, Preserves, Jams, and Jellies	311421	Fruit and Vegetable Canning	

	2034	Dried and Dehydrated Fruits, Vegetables and Soup Mixes (vegetable flour)	**311211**	Flour Milling	
		(except vegetable flour and soup mixes made from purchased dried and dehydrated ingredients)	**311423**	Dried and Dehydrated Food Manufacturing	
		(soup mixes made from purchased dehydrated ingredients)	**311999**	All Other Miscellaneous Food Manufacturing	
	2035	Pickled Fruits and Vegetables, Vegetable Sauces and Seasonings, and Salad Dressings (pickled fruits and vegetables)	**311421**	Fruit and Vegetable Canning	
		(sauces and salad dressings)	**311941**	Mayonnaise, Dressing, and Other Prepared Sauce Manufacturing	
	2037	Frozen Fruits, Fruit Juices, and Vegetables	**311411**	Frozen Fruit, Juice, and Vegetable Manufacturing	
	2038	Frozen Specialties, Not Elsewhere Classified	**311412**	Frozen Specialty Food Manufacturing	
U1	**2041**	Flour and Other Grain Mill Products	**311211**	Flour Milling	
	2043	Cereal Breakfast Foods (cereal breakfast foods and related preparations except grain based coffee substitutes)	**311230**	Breakfast Cereal Manufacturing	
		(grain based coffee substitutes)	**311920**	Coffee and Tea Manufacturing	
	2044	Rice Milling	**311212**	Rice Milling	
	2045	Prepared Flour Mixes and Doughs	**311822**	Flour Mixes and Dough Manufacturing from Purchased Flour	
	2046	Wet Corn Milling (except refining purchased corn oil)	**311221**	Wet Corn Milling	
		(refining purchased corn oil)	**311225**	Fats and Oils Refining and Blending	
	2047	Dog and Cat Food	**311111**	Dog and Cat Food Manufacturing	
	2048	Prepared Feeds and Feed Ingredients for Animals and Fowls, Except Dogs and Cats (except slaughtering animals for pet food)	**311119**	Other Animal Food Manufacturing	
		(slaughtering animals for pet food)	**311611**	Animal (except Poultry) Slaughtering	
U3	**2051**	Bread and Other Bakery Products, Except Cookies and Crackers	**311812**	Commercial Bakeries	
	2052	Cookies and Crackers (unleavened bread and soft pretzels)	**311812**	Commercial Bakeries	
		(except unleavened bread and pretzels)	**311821**	Cookie and Cracker Manufacturing	

		(hard pretzels and snack pretzels, except soft)	**311919**	Other Snack Food Manufacturing (pretzels, except soft)	
	2053	Frozen Bakery Products, Except Bread	**311813**	Frozen Cakes, Pies, and Other Pastries Manufacturing	
	2061	Cane Sugar, Except Refining	**311311**	Sugarcane Mills	
	2062	Cane Sugar Refining	**311312**	Cane Sugar Refining	
	2063	Beet Sugar	**311313**	Beet Sugar Manufacturing	
	2064	Candy and Other Confectionery Products (chocolate confectionery)	**311330**	Confectionery Manufacturing from Purchased Chocolate	
		(nonchocolate confectionery)	**311340**	Nonchocolate Confectionery Manufacturing	
	2066	Chocolate and Cocoa Products (except chocolate products, made from purchased chocolate)	**311320**	Chocolate and Confectionery Manufacturing from Cacao Beans	
		(chocolate products made from purchased chocolate)	**311330**	Confectionery Manufacturing from Purchased Chocolate	
	2067	Chewing Gum	**311340**	Nonchocolate Confectionery Manufacturing	
	2068	Salted and Roasted Nuts and Seeds	**311911**	Roasted Nuts and Peanut Butter Manufacturing	
U2	**2074**	Cottonseed Oil Mills (cottonseed processing)	**311223**	Other Oilseed Processing	
		(processing purchased cottonseed oil)	**311225**	Fats and Oils Refining and Blending	
	2075	Soybean Oil Mills (soybean processing, except edible soybean oil)	**311222**	Soybean Processing	
		(processing purchased soybean oil)	**311225**	Fats and Oils Refining and Blending	
	2076	Vegetable Oil Mills, Except Corn, Cottonseed, and Soybean (oilseed processing)	**311223**	Other Oilseed Processing	
		(processing purchased vegetable and oilseed oils)	**311225**	Fats and Oils Refining and Blending	
	2077	Animal and Marine Fats and Oils (animal fats and oils)	**311613**	Rendering and Meat Byproduct Processing	
		(canned marine fats and oils)	**311711**	Seafood Canning	
		(fresh and frozen marine fats and oils)	**311712**	Fresh and Frozen Seafood Processing	
	2079	Shortening, Table Oils, Margarine, and Other Edible Fats and Oils, Not Elsewhere Classified (processing soybean oil into edible cooking oils from soybeans crushed in the same establishment)	**311222**	Soybean Processing	

		(processing vegetable oils, except soybean, into edible cooking oils from oilseeds and vegetables crushed in the same establishment)	**311223**	Other Oilseed Processing	
		(except processing vegetable and soybean oils into edible oils from oilseeds and vegetables crushed in the same establishment)	**311225**	Fats and Oils Refining and Blending	
U3	**2082**	Malt Beverages (malt extract)	**311942**	Spice and Extract Manufacturing	
		(except malt extract)	**312120**	Breweries	
	2083	Malt	**311213**	Malt Manufacturing	
	2084	Wines, Brandy and Brandy Spirits	**312130**	Wineries	
	2085	Distilled and Blended Liquors (apple jack)	**312130**	Wineries	
		(except apple jack)	**312140**	Distilleries	
	2086	Bottled and Canned Soft Drinks and Carbonated Water (except bottled water)	**312111**	Soft Drink Manufacturing	
		(bottled water)	**312112**	Bottled Water Manufacturing	
	2087	Flavoring Extracts and Flavoring Syrups, Not Elsewhere Classified (coffee flavoring and syrups)	**311920**	Coffee and Tea Manufacturing	
		(flavoring syrups and concentrates except coffee)	**311930**	Flavoring Syrup and Concentrate Manufacturing	
		(flavoring extracts and natural food colorings)	**311942**	Spice and Extract Manufacturing	
		(powered drink mix)	**311999**	All Other Miscellaneous Food Manufacturing	
	2091	Canned and Cured Fish and Seafoods	**311711**	Seafood Canning	
	2092	Prepared Fresh or Frozen Fish and Seafoods	**311712**	Fresh and Frozen Seafood Processing	
	2095	Roasted Coffee	**311920**	Coffee and Tea Manufacturing	
	2096	Potato Chips, Corn Chips, and Similar Snacks	**311919**	Other Snack Food Manufacturing	
	2097	Maufactured Ice	**312113**	Ice manufacturing	
	2098	Macaroni, Spaghetti, Vermicelli, and Noodles	**311823**	Dry Pasta Manufacturing	
	2099	Food Preparations, Not Elsewhere Classified (rice, uncooked and packaged with other ingredients made in rice mills)	**311212**	Rice Milling	
		(marshmallow creme)	**311340**	Nonchocolate Confectionery Manufacturing	

		(bouillon and potatoes dried and packaged with other ingredients produced in dehydrating plants)	**311423**	Dried and Dehydrated Food Manufacturing	
		(dry pasta packaged with other ingredients made in dry pasta plants)	**311823**	Dry Pasta Manufacturing	
		(tortillas)	**311830**	Tortilla Manufacturing	
		(peanut butter)	**311911**	Roasted Nuts and Peanut Butter Manufacturing	
		(tea)	**311920**	Coffee and Tea Manufacturing	
		(vinegar, prepared dip)	**311941**	Mayonnaise, Dressing, and Other Prepared Sauce Manufacturing	
		(spices, dry dip mix, dry salad dressing mix, and seasoning mix)	**311942**	Spice and Extract Manufacturing	
		(perishable prepared food)	**311991**	Perishable Prepared Food Manufacturing	
		(except bouillon, marshmallow creme, spices, peanut butter, perishable prepared foods, tortillas, tea and tea extracts, dry dip mix, prepared dips, dry salad dressing mix, seasoning mix, dried potatoes, pasta, and rice mixed with other ingredients in mills or dehydrating plants, reducing maple sap to maple syrup, wool grease, and vinegar)	**311999**	All Other Miscellaneous Food Manufacturing	
	2111	Cigarettes	**312221**	Cigarette Manufacturing	
	2121	Cigars	**312229**	Other Tobacco Product Manufacturing	
	2131	Chewing and Smoking Tobacco and Snuff	**312229**	Other Tobacco Product Manufacturing	
	2141	Tobacco Stemming and Redrying (stemming and redrying tobacco)	**312210**	Tobacco Stemming and Redrying	
		(reconstituted tobacco)	**312229**	Other Tobacco Product Manufacturing	

Sector V. Textile Mills, Apparel, and Other Fabric Product Manufacturing

Sub-sector	SIC Codes		NAICS Codes		Notes
V1	**2211**	Broadwoven Fabric Mills, Cotton	**313210**	Broadwoven Fabric Mills	
	2221	Broadwoven Fabric Mills, Manmade Fiber and Silk	**313210**	Broadwoven Fabric Mills	
	2231	Broadwoven Fabric Mills, Wool (Including Dyeing and Finishing) (except finishing wool fabric without weaving wool fabric)	**313210**	Broadwoven Fabric Mills 2231	
		(wool broadwoven fabric finishing without weaving fabric)	**313311**	Broadwoven Fabric Finishing Mills	

		(wool fabric, except broadwoven, finishing without weaving fabric)	**313312**	Textile and Fabric Finishing (except Broadwoven Fabric) Mills	
	2241	Narrow Fabric and Other Smallwares Mills: Cotton, Wool, Silk and Manmade Fiber	**313221**	Narrow Fabric Mills	
	2251	Women's Full-Length and Knee-Length Hosiery, Except Socks (dyeing and finishing sheer hosiery without knitting sheer hosiery)	**313312**	Textile and Fabric Finishing (except Broadwoven Fabric) Mills	
		(except dyeing and finishing sheer hosiery without knitting sheer hosiery)	**315111**	Sheer Hosiery Mills	
	2252	Hosiery, Not Elsewhere Classified (dyeing and finishing hosiery , except sheer, without knitting hosiery)	**313312**	Textile and Fabric Finishing (except Broadwoven Fabric) Mills	
		(girls' full length and knee length sheer hosiery)	**315111**	Sheer Hosiery Mills	
		(except girls' full-length and knee-length sheer hosiery and dyeing and finishing hosiery without knitting hosiery)	**315119**	Other Hosiery and Sock Mills	
	2253	Knit Outerwear Mills (dyeing and finishing knit outerwear without knitting outerwear)	**313312**	Textile and Fabric Finishing (except Broadwoven Fabric) Mills	
		(except bath and lounging robes and dying and finish without knitting garments)	**315191**	Outerwear Knitting Mills	
		(knitting bath or lounging robes)	**315192**	Underwear and Nightwear Knitting Mills	
	2254	Knit Underwear and Nightwear Mills (dyeing and finishing underwear and nightwear without knitting garments)	**313312**	Textile and Fabric Finishing (except Broadwoven Fabric) Mills	
		(except dyeing and finishing underwear and nightwear without knitting garments)	**315192**	Underwear and Nightwear Knitting Mills	
	2257	Weft Knit Fabric Mills (except finishing without knitting weft fabric)	**313241**	Weft Knit Fabric Mills	
		(finishing weft fabric without knitting weft fabric)	**313312**	Textile and Fabric Finishing (except Broadwoven Fabric) Mills	
	2258	Weft Knit Fabric Mills (except finishing without knitting weft fabric)	**313241**	Weft Knit Fabric Mills	
		(finishing weft fabric without knitting weft fabric)	**313312**	Textile and Fabric Finishing (except Broadwoven Fabric) Mills	

	2259	Knitting Mills, Not Elsewhere Classified (knitting weft fabric and fabricating textile products, such as bedspreads, curtains, or towels)	**313241**	Weft Knit Fabric Mills	
		(knitting lace or warp fabric and fabricating textile products, such as bedspreads, curtains, or towels)	**313249**	Other Knit Fabric and Lace Mills	
		(dyeing and finishing knit gloves and mittens without knitting gloves or mittens)	**313312**	Textile and Fabric Finishing (except Broadwoven Fabric) Mills	
		(knitting gloves and mittens)	**315191**	Outerwear Knitting Mills	
		(knitting girdles and allied foundation garments)	**315192**	Underwear and Nightwear Knitting Mills	
	2261	Finishers of Broadwoven Fabrics of Cotton	**313311**	Broadwoven Fabric Finishing Mills	
	2262	Finishers of Broadwoven Fabrics of Manmade Fibers and Silk	**313311**	Broadwoven Fabric Finishing Mills	
	2269	Finishers of Textiles, Not Elsewhere Classified (linen fabric finishing)	**313311**	Broadwoven Fabric Finishing Mills	
		(except linen fabric finishing)	**313312**	Textile and Fabric Finishing (except Broadwoven Fabric) Mills	
	2273	Carpets and Rugs	**314110**	Carpet and Rug Mills	
	2281	Yarn Spinning Mills	**313111**	Yarn Spinning Mills	
	2282	Yarn Texturizing, Throwing, Twisting and Spinning Mills	**313112**	Yarn Texturizing, Throwing, Twisting Mills	
	2284	Thread Mills (except finishing thread without manufacturing thread)	**313113**	Thread Mills	
		(finishing thread without manufacturing thread)	**313312**	Textile and Fabric Finishing (except Broadwoven Fabric) Mills	
	2295	Coated Fabrics, Not Rubberized	**313320**	Fabric Coating Mills	
	2296	Tire Cord and Fabrics	**314992**	Tire Cord and Tire fabric Mills	
	2297	Nonwoven Fabrics	**313230**	Nonwoven Fabric Mills	
	2298	Cordage and Twine (hemp rope made in spinning mills)	**313111**	Yarn Spinning Mills	
		(except hemp rope made in spinning mills)	**314991**	Rope, Cordage, and Twine Mills	
	2299	Textile Goods, Not Elsewhere Classified			

		(hemp bags made in spinning mills, & spinning yarn of flax, hemp, jute, and ramie)	**313111**	Yarn Spinning Mills	
		(manufacturing thread of hemp, linen, and ramie)	**313113**	Thread Mills	
		(broadwoven fabrics of jute, linen, hemp, and ramie and hand woven fabrics)	**313210**	Broadwoven Fabric Mills	
		(narrow woven fabric of jute, linen, hemp, and ramie)	**313221**	Narrow Fabric Mills	
		(nonwoven felt)	**313230**	Nonwoven Fabric Mills	
		(finishing hard fiber thread and yarn without manufacturing thread or yarn)	**313312**	Textile and Fabric Finishing (except Broadwoven Fabric) Mills	
		(manufacturing other textile products)	**314999**	All Other Miscellaneous Textile Product Mills	
	2311	Men's and Boys' Suits, Coats, and Overcoats (contractors)	**315211**	Men's and Boys' Cut and Sew Apparel Contractors	
		(except contractors)	**315222**	Men's and Boys' Cut and Sew Suit, Coat and Overcoat Manufacturing	
	2321	Men's and Boys' Shirts, Except Work Shirts (contractors)	**315211**	Men's and Boys' Cut and Sew Apparel Contractors	
		(except contractors)	**315223**	Men's and Boys' Cut and Sew Shirt (except Work Shirt) Manufacturing	
	2322	Men's and Boys' Underwear and Nightwear (contractors)	**315211**	Men's and Boys' Cut and Sew Apparel Contractors	
		(except contractors)	**315221**	Men's and Boys' Cut and Sew Underwear and Nightwear Manufacturing	
	2323	Men's and Boys' Neckwear (contractors)	**315211**	Men's and Boys' Cut and Sew Apparel Contractors	
		(except contractors)	**315993**	Men's and Boys' Neckwear Manufacturing	
	2325	Men's and Boys' Separate Trousers and Slacks (contractors)	**315211**	Men's and Boys' Cut and Sew Apparel Contractors	
		(except contractors)	**315224**	Men's and Boys' Cut and Sew Trouser, Slack and Jean Manufacturing	

	2326	Men's and Boys' Work Clothing			
		(contractors)	**315211**	Men's and Boys' Cut and Sew Apparel Contractors	
		(except contractors)	**315225**	Men's and Boys' Cut and Sew Work Clothing Manufacturing	
	2329	Men's and Boys' Clothing, Not Elsewhere Classified			
		(contractors)	**315211**	Men's and Boys' Cut and Sew Apparel Contractors	
		(except team athletic uniforms and contractors)	**315228**	Men's and Boys' Cut and Sew Other Outerwear Manufacturing	
		(team athletic uniforms except contractors)	**315299**	All Other Cut and Sew Apparel Manufacturing	
	2331	Women's, Misses', and Juniors' Blouses and Shirts			
		(contractors)	**315212**	Women's, Girls', and Infants' Cut and Sew Apparel Contractors	
		(except contractors)	**315232**	Women's and Girls' Cut and Sew Blouse and Shirt Manufacturing	
	2335	Women's, Misses', and Juniors' Dresses			
		(contractors)	**315212**	Women's, Girls', and Infants' Cut and Sew Apparel Contractors	
		(except contractors)	**315233**	Women's and Girls' Cut and Sew Dress Manufacturing	
	2337	Women's, Misses', and Juniors' Suits, Skirts, and Coats			
		(contractors)	**315212**	Women's, Girls', and Infants' Cut and Sew Apparel Contractors	
		(except contractors)	**315234**	Women's and Girls' Cut and Sew Suit, Coat, Tailored Jacket, and Skirt Manufacturing	
	2339	Women's, Misses', and Juniors' Outerwear, Not Elsewhere Classified			
		(contractors)	**315212**	Women's, Girls', and Infants' Cut and Sew Apparel Contractors	
		(except team athletic uniforms, scarves, and contractors)	**315239**	Women's and Girls' Cut and Sew Other Outerwear Manufacturing	
		(team athletic uniforms except contractors)	**315299**	All Other Cut and Sew Apparel Manufacturing	
		(scarves except contractors)	**315999**	Other Apparel Accessories and Other Apparel Manufacturing	

	2341	Women's, Misses', Children's, and Infants' Underwear and Nightwear			
		(boys' contractors)	**315211**	Men's and Boys' Cut and Sew Apparel Contractors	
		(women's, girls', and infants' contractors)	**315212**	Women's, Girls', and Infants' Cut and Sew Apparel Contractors	
		(boys' except contractors)	**315221**	Men's and Boys' Cut and Sew Underwear and Nightwear Manufacturing	
		(women and girls' except contractors)	**315231**	Women's and Girls' Cut and Sew Lingerie, Loungewear, and Nightwear Manufacturing	
		(infants' except contractors)	**315291**	Infants' Cut and Sew Apparel Manufacturing	
	2342	Brassieres, Girdles, and Allied Garments			
		(contractors)	**315212**	Women's, Girls', and Infants' Cut and Sew Apparel Contractors	
		(except contractors)	**315231**	Women's and Girls' Cut and Sew Lingerie, Loungewear, and Nightwear Manufacturing	
	2353	Hats, Caps, and Millinery			
		(men's and boys' contractors)	**315211**	Men's and Boys' Cut and Sew Apparel Contractors	
		(women's, girls', and infants' contractors)	**315212**	Women's, Girls', and Infants' Cut and Sew Apparel Contractors	
		(except contractors)	**315991**	Hat, Cap, and Millinery Manufacturing	
	2361	Girls', Children's, and Infants' Dresses, Blouses, and Shirts			
		(boys' contractors)	**315211**	Men's and Boys' Cut and Sew Apparel Contractors	
		(girls' and infants' contractors)	**315212**	Women's, Girls', and Infants' Cut and Sew Apparel Contractors	
		(boys' shirts except contractors)	**315223**	Men's and Boys' Cut and Sew Shirt (except Work Shirt) Manufacturing	
		(girls' blouses and shirts except contractors)	**315232**	Women's and Girls' Cut and Sew Blouse and Shirt Manufacturing	
		(girls' dresses except contractors)	**315233**	Women's and Girls' Cut and Sew Dress Manufacturing	
		(infants' except contractors)	**315291**	Infants' Cut and Sew Apparel Manufacturing	
	2369	Girls', Children's, and Infants' Outerwear, Not Elsewhere Classified			
		(boys' contractors)	**315211**	Men's and Boys' Cut and Sew Apparel Contractors	
		(girls' and infants' contractors)	**315212**	Women's, Girls', and Infants' Cut and Sew Apparel Contractors	
		(boys' robes except contractors)	**315221**	Men's and Boys' Cut and Sew Underwear and Nightwear Manufacturing	

		(boys' suits and coats except contractors)	**315222**	Men's and Boys' Cut and Sew Suit, Coat, and Overcoat Manufacturing	
		(boys' trousers, slacks, and jeans except contractors)	**315224**	Men's and Boys' Cut and Sew Trouser, Slack and Jean Manufacturing	
		(boys' other outerwear except contractors)	**315228**	Men's and Boys' Cut and Sew Other Outerwear Manufacturing	
		(girls' robes except contractors)	**315231**	Women's and Girls' Cut and Sew Lingerie, Loungewear, and Nightwear Manufacturing	
		(girls' suits, coats, jackets, and skirts except contractors)	**315234**	Women's and Girls' Cut and Sew Suit, Coat, Tailored Jacket, and Skirt Manufacturing	
		(girls' other outerwear except contractors)	**315239**	Women's and Girls' Cut and Sew Other Outerwear Manufacturing	
		(infants' except contractors)	**315291**	Infants' Cut and Sew Apparel Manufacturing	
	2371	Fur Goods			
		(men's and boys' contractors)	**315211**	Men's and Boys' Cut and Sew Apparel Contractors	
		(women's, girls', and infants' contractors)	**315212**	Women's, Girls', and Infants' Cut and Sew Apparel Contractors	
		(except contractors)	**315292**	Fur and Leather Apparel Manufacturing	
	2381	Dress and Work Gloves, Except Knit and All-Leather			
		(men's and boys' contractors)	**315211**	Men's and Boys' Cut and Sew Apparel Contractors	
		(women's, girls', and infants' contractors)	**315212**	Women's, Girls', and Infants' Cut and Sew Apparel Contractors	
		(except contractors)	**315992**	Glove and Mitten Manufacturing	
	2384	Robes and Dressing Gowns			
		(men's and boys' contractors)	**315211**	Men's and Boys' Cut and Sew Apparel Contractors	
		(women's, girls', and infants' contractors)	**315212**	Women's, Girls', and Infants' Cut and Sew Apparel Contractors	
		(men's except contractors)	**315221**	Men's and Boys' Cut and Sew Underwear and Nightwear Manufacturing	
		(women's except contractors)	**315231**	Women's and Girls' Cut and Sew Lingerie, Loungewear, and Nightwear Manufacturing	
	2385	Waterproof Outerwear			
		(men's and boys' contractors)	**315211**	Men's and Boys' Cut and Sew Apparel Contractors	
		(women's, girls', and infants' contractors)	**315212**	Women's, Girls', and Infants' Cut and Sew Apparel Contractors	
		(men's and boys' water resistant or water repellent tailored overcoats, except made from rubberized fabric, plastics, etc. and contractors)	**315222**	Men's and Boys' Cut and Sew Suit, Coat, and Overcoat Manufacturing	

		(men's and boys' water resistant or water repellent nontailored outerwear, except made from rubberized fabric, plastics, etc. and contractors)	**315228**	Men's and Boys' Cut and Sew Other Outerwear Manufacturing	
		(women's and girls' water resistant or water repellent tailored coats, except made from rubberized fabric, plastics, etc. and contractors)	**315234**	Women's and Girls' Cut and Sew Suit, Coat, Tailored Jacket, and Skirt Manufacturing"	
		(other women's and girls' water resistant or water repellent nontailored outerwear, except made from rubberized fabric, plastics, etc. and contractors)	**315239**	Women's and Girls' Cut and Sew Other Outerwear Manufacturing	
		(infants' waterproof outerwear made from rubberized fabric, plastics, etc. except contractors)	**315291**	Infants' Cut and Sew Apparel Manufacturing	
		(men's, boys', women's, and girls' waterproof outerwear made from rubberized fabric, plastics, etc. except contractors)	**315299**	All Other Cut and Sew Apparel Manufacturing	
		(accessories, such as aprons, bibs, and other miscellaneous waterproof items, made from rubberized fabric, plastics, etc. except contractors)	**315999**	Other Apparel Accessories and Other Apparel Manufacturing	
	2386	Leather and Sheep-Lined Clothing			
		(men's and boys' contractors)	**315211**	Men's and Boys' Cut and Sew Apparel Contractors	
		(women's, girls', and infants' contractors)	**315212**	Women's, Girls', and Infants' Cut and Sew Apparel Contractors	
		(except contractors)	**315292**	Fur and Leather Apparel Manufacturing	
	2387	Apparel Belts			
		(men's and boys' contractors)	**315211**	Men's and Boys' Cut and Sew Apparel Contractors	
		(women's, girls', and infants' contractors)	**315212**	Women's, Girls', and Infants' Cut and Sew Apparel Contractors	
		(except contractors)	**315999**	Other Apparel Accessories and Other Apparel Manufacturing	
	2389	Apparel and Accessories, Not Elsewhere Classified			
		(men's and boys' contractors)	**315211**	Men's and Boys' Cut and Sew Apparel Contractors	
		(women's, girls', and infants' contractors)	**315212**	Women's, Girls', and Infants' Cut and Sew Apparel Contractors	

		(garters and garter belts except contractors)	**315231**	Women's and Girls' Cut and Sew Lingerie, Loungewear, and Nightwear Manufacturing	
		(apparel, such as academic gowns, clerical outerwear, and band uniforms, except contractors)	**315299**	All Other Cut and Sew Apparel Manufacturing	
		(accessories such as, handkerchiefs, arm bands, cummerbunds, suspenders, etc., except contractors)	**315999**	Other Apparel Accessories and Other Apparel Manufacturing	
	2391	Curtains and Draperies	**314121**	Curtain and Drapery Mills	
	2392	Housefurnishings, Except Curtains and Draperies (except mops, dust rags, and bags)	**314129**	Other Household Textile Product Mills	
		(blanket, laundry, and wardrobe bags)	**314911**	Textile Bag Mills	
		(dust rags)	**314999**	All Other Miscellaneous Textile Product Mills	
		(floor and dust mops)	**339994**	Broom, Brush, and Mop Manufacturing	
	2393	Textile Bags	**314911**	Textile Bag Mills	
	2394	Canvas and Related Products	**314912**	Canvas and Related Product Mills	
	2395	Pleating, Decorative and Novelty Stitching, and Tucking for the Trade (except apparel contractors)	**314999**	All Other Miscellaneous Textile Product Mills	
		(men's and boy's apparel contractors)	**315211**	Men's and Boys' Cut and Sew Apparel Contractors	
		(women's, girls', and infants' apparel contractors)	**315212**	Women's, Girls', and Infants' Cut and Sew Apparel Contractors	
	2396	Automotive Trimmings, Apparel Findings, and Related Products (textile products except automotive and apparel trimmings and findings, printing or embossing on apparel, and contractors)	**314999**	All Other Miscellaneous Textile Product Mills	
		(men's and boys' contractors)	**315211**	Men's and Boys' Cut and Sew Apparel Contractors	
		(women's, girls', and infants' contractors)	**315212**	Women's, Girls', and Infants' Cut and Sew Apparel Contractors	
		(apparel findings and trimmings, except contractors)	**315999**	Other Apparel Accessories and Other Apparel Manufacturing	
		(printing and embossing on fabric articles)	**323113**	Commercial Screen Printing	
		(textile motor vehicle trimming except contractors)	**336360**	Motor Vehicle Seating and Interior Trim Manufacturing	
	2397	Schiffli Machine Embroideries	**313222**	Schiffli Machine Embroidery	

	2399	Fabricated Textile Products, Not Elsewhere Classified (except apparel and accessories, automotive seat belts, seat and tire covers, and contractors)	**314999**	All Other Miscellaneous Textile Product Mills	
		(men's and boys' contractors)	**315211**	Men's and Boys' Cut and Sew Apparel Contractors	
		(women's, girls', and infants' contractors)	**315212**	Women's, Girls', and Infants' Cut and Sew Apparel Contractors	
		(apparel and apparel accessories, except contractors)	**315999**	Other Apparel Accessories and Other Apparel Manufacturing	
		(seat belts, and seat and tire covers)	**336360**	Motor Vehicle Seating and Interior Trim Manufacturing	
	3131	Boot and Shoe Cut Stock and Findings (except wood heels and metal buckles)	**316999**	All Other Leather Good Manufacturing	
		(heels, boot and shoe, finished wood, manufacturing)	**321999**	All Other Miscellaneous Wood Product Manufacturing	A facility with the primary activity of NAICS 321999 "heels, boot and shoe, finished wood, manufacturing" can be regulated under Sector A or Sector V. Sector A requires additional technology-based effluent limits comprising good housekeeping; additional SWPPP requirements; additional inspection requirements; and benchmark monitoring for COD and TSS. Sector V requires additional technology-based effluent limits comprised of good housekeeping measures and employee training; additional SWPPP requirements; and additional inspection requirements. Regulatory burden would likely be greater under Sector A.
		(metal buckles)	**339993**	Fastener, Button, Needle, and Pin Manufacturing	Any facility whose primary activity is manufacturing metal buckles (SIC 3131 / NAICS 339993) should be regulated under Sector Y, but may continue to be regulated under Sector V, or alternatively, under Sector AD. Sector Y does not apply additional sector-specific requirements to metal

					buckle manufacturers. Sector V applies additional technology-based limitations comprised of good housekeeping measures for material storage areas and employee training. Under Sector AD EPA could establish additional facility-specific monitoring and reporting requirements. Regulatory burden would likely be greater under Sector V.
	3142	House Slippers	**316212**	House Slipper Manufacturing	
	3143	Men's Footwear, Except Athletic	**316213**	Men's Footwear (except Athletic) Manufacturing	
	3144	Women's Footwear, Except Athletic	**316214**	Women's Footwear (except Athletic) Manufacturing	
	3149	Footwear, Except Rubber, Not Elsewhere Classified	**316219**	Other Footwear Manufacturing	
	3151	Leather Gloves and Mittens (men's and boys' contractors)	**315211**	Men's and Boys' Cut and Sew Apparel Contractors	
		(women's, girls', and infants' contractors)	**315212**	Women's, Girls', and Infants' Cut and Sew Apparel Contractors	
		(except contractors)	**315992**	Glove and Mitten Manufacturing	
	3161	Luggage	**316991**	Luggage Manufacturing	
	3171	Women's Handbags and Purses	**316992**	Women's Handbag and Purse Manufacturing	
	3172	Personal Leather Goods, Except Women's Handbags and Purses (except nonprecious metal personal goods, such as card cases, cigar cases, and comb cases)	**316993**	Personal Leather Good (except Women's Handbag and Purse) Manufacturing	
		(nonprecious metal personal goods, such as card cases, cigar cases, and comb cases)	**339914**	Costume Jewelry and Novelty Manufacturing	Any facility whose primary activity is manufacturing nonprecious metal personal goods, such as card cases, cigar cases, and comb cases (SIC 3172 / NAICS 339914) should be regulated under Sector Y, but may continue to be regulated under Sector V, or alternatively, under Sector AD. Sector Y does not apply additional sector-specific requirements to metal buckle manufacturers. Sector V applies additional technology-based limitations comprised of good

					housekeeping measures for material storage areas and employee training. Under Sector AD EPA could establish additional facility-specific monitoring and reporting requirements. Regulatory burden would likely be greater under Sector V.
	3199	Leather Goods, Not Elsewhere Classified	**316999**	All Other Leather Good Manufacturing	

Sector W. Furniture and Fixtures

Sub-sector	SIC Codes		NAICS Codes		Notes
W1	**2434**	Wood Kitchen Cabinets	**337110**	Wood Kitchen Cabinet and Countertop Manufacturing	
	2511	Wood Household Furniture, Except Upholstered (except wood box spring frames)	**337122**	Nonupholstered Wood Household Furniture Manufacturing	
		(wood box spring frames (parts))	**337215**	Showcase, Partition, Shelving, and Locker Manufacturing	
	2512	Wood Household Furniture, Upholstered	**337121**	Upholstered Household Furniture Manufacturing	
	2514	Metal Household Furniture (upholstered)	**337121**	Upholstered Household Furniture Manufacturing	
		(except upholstered metal furniture and metal box spring frames)	**337124**	Metal Household Furniture Manufacturing	
		(metal box spring frames)	**337215**	Showcase, Partition, Shelving, and Locker Manufacturing	
	2515	Mattresses, Foundations, and Convertible Beds (convertible beds)	**337121**	Upholstered Household Furniture Manufacturing	
		(mattresses and foundations)	**337910**	Mattress Manufacturing	
	2517	Wood, Television, Radio, Phonograph, and Sewing Machine Cabinets	**337129**	Wood, Television, Radio, Phonograph, and Sewing Machine Cabinet Manufacturing	
	2519	Household Furniture, Not Elsewhere Classified	**337125**	Household Furniture (except Wood and Metal) Manufacturing	
	2521	Wood Office Furniture	**337211**	Wood Office Furniture Manufacturing	
	2522	Office Furniture, Except Wood	**337214**	Office Furniture (Except Wood) Manufacturing	

	2531	Public Building and Related Furniture (seats for motor vehicles)	**336360**	Motor Vehicle Seating and Interior Trim Manufacturing	
		(except motor vehicle seats and blackboards)	**337127**	Institutional Furniture Manufacturing	
		(blackboards)	**339942**	Lead Pencil and Art Good Manufacturing	
	2541	Wood Office and Store Fixtures, Partitions, Shelving, and Lockers (counter tops)	**337110**	Wood Kitchen Cabinet and Countertop Manufacturing	
		(wood lunchroom tables and chairs)	**337127**	Institutional Furniture Manufacturing	
		(custom architectural millwork)	**337212**	Custom Architectural Woodwork and Millwork Manufacturing	
		(except custom architectural millwork, counter tops, and lunchroom tables and chairs)	**337215**	Showcase, Partition, Shelving, and Locker Manufacturing	
	2542	Office and Store Fixtures, Partitions, Shelving, and Lockers, Except Wood (lunchroom tables and chairs)	**337127**	Institutional Furniture Manufacturing	
		(except lunchroom tables and chairs)	**337215**	Showcase, Partition, Shelving, and Locker Manufacturing	
	2591	Drapery Hardware and Window Blinds and Shades	**337920**	Blind and Shade Manufacturing	
	2599	Furniture and Fixtures, Not Elsewhere Classified (except hospital beds)	**337127**	Institutional Furniture Manufacturing	
		(hospital beds)	**339111**	Laboratory Apparatus and Furniture Manufacturing	

Sector X. Printing and Publishing

Sub-sector	SIC Codes		NAICS Codes		Notes
X1	**2711**	Newspapers: Publishing, or Publishing and Printing (except Internet newspaper publishing)	**511110**	Newspaper Publishers	
	2721	Periodicals: Publishing, or Publishing and Printing (except Internet periodical publishing)	**511120**	Periodical Publishers	
	2731	Books: Publishing, or Publishing and Printing (except Internet book publishing) (except music books)	**511130**	Book Publishers	
		(music books)	**512230**	Music Publishers	

	2732	Book Printing	**323117**	Book Printing	
	2741	Miscellaneous Publishing (except Internet publishers) (shopping news and advertising periodical publishing or publishing and printing except Internet)	**511120**	Periodical Publishers	
		(technical manuals and books publishing or publishing and printing, except Internet)	**511130**	Book Publishers	
		(directory publishers, except Internet publishers)	**511140**	Directory and Mailing List Publishers	
		(except database, advertising periodicals, shopping news, technical manuals and books, and sheet music publishing or publishing and printing)	**511199**	All Other Publishers	
		(sheet music publishing or publishing and printing)	**512230**	Music Publishers	
	2752	Commercial Printing, Lithographic (except quick printing)	**323110**	Commercial Lithographic Printing	
		(quick printing)	**323114**	Quick Printing	
	2754	Commercial Printing, Gravure	**323111**	Commercial Gravure Printing	
	2759	Commercial Printing, NEC (flexographic printing)	**323112**	Commercial Flexographic Printing	
		(screen printing)	**323113**	Commercial Screen Printing	
		(digital printing, except quick printing)	**323115**	Digital Printing	
		(other commercial printing except flexographic, screen, digital, and quick printing)	**323119**	Other Commercial Printing	
	2771	Greeting Cards (except Internet greeting card publishers) (lithographic printing of greeting cards)	**323110**	Commercial Lithographic Printing	
		(gravure printing of greeting cards)	**323111**	Commercial Gravure Printing	
		(flexographic printing of greeting cards)	**323112**	Commercial Flexographic Printing	
		(screen printing of greeting cards)	**323113**	Commercial Screen Printing	
		(other printing of greeting cards)	**323119**	Other Commercial Printing	
		(publishing greeting cards)	**511191**	Greeting Card Publishers	
	2782	Blankbooks, Looseleaf Binders and Devices (checkbooks)	**323116**	Manifold Business Form Printing	
		(except checkbooks)	**323118**	Blankbook, Loose-leaf Binder, and Device Manufacturing	

	2789	Bookbinding and Related Work	**323121**	Tradebinding and Related Work	
	2791	Typesetting	**323122**	Prepress Services	
	2796	Platemaking and Related Services	**323122**	Prepress Services	

Sector Y. Rubber, Miscellaneous Plastic Products, and Miscellaneous Manufacturing Industries

Sub-sector	SIC Codes		NAICS Codes		Notes
Y1	**3011**	Tires and Inner Tubes	**326211**	Tire Manufacturing (except Retreading)	
	3021	Rubber and Plastics Footwear	**316211**	Rubber and Plastics Footwear Manufacturing	
	3052	Rubber and Plastics Hose and Belting	**326220**	Rubber and Plastics Hoses and Belting Manufacturing	
	3053	Gaskets, Packing, and Sealing Devices	**339991**	Gaskets, Packing, and Sealing Device Manufacturing	
	3061	Molded, Extruded, and Lathe-Cut Mechanical Rubber Goods	**326291**	Rubber Product Manufacturing for Mechanical Use	
	3069	Fabricated Rubber Products, Not Elsewhere Classified (rubberizing fabric or purchased textile products)	**313320**	Fabric Coating Mills	
		(bags made from rubberized fabric)	**314911**	Textile Bag Mills	
		(rubber cut and sew outerwear)	**315299**	All Other Cut and Sew Apparel Manufacturing	
		(bibs, bathing caps, related rubber accessories)	**315999**	Other Apparel Accessories and Other Apparel Manufacturing	
		(rubber resilient floor coverings)	**326192**	Resilient Floor Covering Manufacturing	
		(except rubberized fabric and garments, gloves, life vests, wet suits, accessories, such as bibs and bathing caps, rubber toys, bags made from rubberized fabric, rubber diaper covers, and rubber resilient floor coverings)	**326299**	All Other Rubber Product Manufacturing	
		(rubber gloves, inflatable rubber life jackets)	**339113**	Surgical and Appliance and Supplies Manufacturing	
		(wet suits)	**339920**	Sporting and Athletic Goods Manufacturing	
		(rubber toys, except dolls)	**339932**	Game, Toy, and Children's Vehicle Manufacturing	
Y2	**3081**	Unsupported Plastics Film and Sheet	**326113**	Unlaminated Plastics Film and Sheet (except Packaging) Manufacturing	
	3082	Unsupported Plastics Profile Shapes	**326121**	Unlaminated Plastics Profile Shape Manufacturing	

	3083	Laminated Plastics Plate, Sheet, and Profile Shapes	**326130**	Laminated Plastics Plate, Sheet (except Packaging), and Shape Manufacturing	
	3084	Plastics Pipe	**326122**	Plastics Pipe and Pipe Fitting Manufacturing	
	3085	Plastics Bottles	**326160**	Plastics Bottle Manufacturing	
	3086	Plastics Foam Products (polystyrene foam products)	**326140**	Polystyrene Foam Product Manufacturing	
		(except polystyrene foam products)	**326150**	Urethane and Other Foam Product (except Polystyrene) Manufacturing	
	3087	Custom Compounding of Purchased Plastics Resins	**325991**	Custom Compounding of Purchased Resins	
	3088	Plastics Plumbing Fixtures	**326191**	Plastics Plumbing Fixture Manufacturing	
	3089	Plastics Products, Not Elsewhere Classified (plastics sausage casings)	**326121**	Unlaminated Plastics Profile Shape Manufacturing	
		(pipe fittings)	**326122**	Plastics Pipe and Pipe Fitting Manufacturing	
		(except plastics pipe fittings, inflatable plastics life jackets, plastics furniture parts, and plastics sausage casings)	**326199**	All Other Plastics Product Manufacturing	
		(finished plastic furniture parts)	**337215**	Showcase, Partition, Shelving, and Locker Manufacturing	
		(inflatable plastic life jackets)	**339113**	Surgical Appliance and Supplies Manufacturing	
	3931	Musical Instruments	**339992**	Musical Instrument Manufacturing	
	3942	Dolls and Stuffed Toys	**339931**	Doll and Stuffed Toy Manufacturing	
	3944	Games, Toys, and Children's Vehicles, Except Dolls and Bicycles (metal tricycles)	**336991**	Motorcycle, Bicycle, and Parts Manufacturing	Any facility whose primary activity is manufacturing metal tricycles (SIC 3944 / NAICS 336991) should be regulated under Sector AB, but may continue to be regulated under Sector Y, or alternatively, under Sector AD. Sector AB applies additional SWPPP requirements. Sector Y does not apply additional sector-specific requirements to metal tricycle manufacturers and under Sector AD EPA could establish additional facility-specific monitoring and reporting requirements. Regulatory burden would be greater under Sector AB.

		(except metal tricycles)	**339932**	Game, Toy, and Children's Vehicle Manufacturing	
	3949	Sporting and Athletic Goods, Not Elsewhere Classified	**339920**	Sporting and Athletic Goods Manufacturing	
	3951	Pens, Mechanical Pencils, and Parts	**339941**	Pens, Mechanical Pencil Manufacturing	
	3953	Marking Devices	**339943**	Marking Device Manufacturing	
	3955	Carbon Paper and Inked Ribbons	**339944**	Carbon Paper and Inked Ribbon Manufacturing	
	3961	Costume Jewelry and Costume Novelties, Except Precious Metal (except cuff links)	**339914**	Costume Jewelry and Novelty Manufacturing	
		(nonprecious cuff links)	**339993**	Fastener, Button, Needle, and Pin Manufacturing	
	3965	Fasteners, Buttons, Needles, and Pins	**339993**	Fastener, Button, Needle, and Pin Manufacturing	
	3991	Brooms and Brushes	**339994**	Broom, Brush, and Mop Manufacturing	
	3993	Signs and Advertising Specialties (screen printing purchased advertising specialties[34])	**323113**	Commercial Screen Printing	Any facility whose primary activity is screen printing purchased advertising specialties (SIC 3993 / NAICS 323113) should be regulated under Sector X, but may continue to be regulated under Sector Y, or alternatively, under Sector AD. Sector X applies additional technology-based effluent limits comprised of good housekeeping measures for material storage areas, and additional SWPPP requirements. Sector Y does not apply additional requirements to these facilities and under Sector AD EPA could establish additional facility-specific monitoring and reporting requirements. Regulatory burden would be greater under Sector X.
		(signs)	**339950**	Sign Manufacturing	
	3995	Burial Caskets	**339995**	Burial Casket Manufacturing	
	3996	Linoleum, Asphalted-Felt-Base, and Other Hard Surface Floor Coverings, Not Elsewhere Classified	**326192**	Resilient Floor Covering Manufacturing	

	3999	Manufacturing Industries, Not Elsewhere Classified			
		(fur dressing and finishing)	**316110**	Leather and Hide Tanning and Finishing	Any facility whose primary activity is fur dressing and finishing (SIC 3999 / NAICS 316110) should be regulated under Sector Z, but may continue to be regulated under Sector Y, or alternatively, under Sector AD. Sector Z applies additional technology-based effluent limits comprised of good housekeeping measures for material storage areas and handling areas, and additional SWPPP requirements. Sector Y does not apply additional requirements to these facilities and under Sector AD EPA could establish additional facility-specific monitoring and reporting requirements. Regulatory burden would be greater under Sector Z.
		(burnt wood articles)	**321999**	All Other Miscellaneous Wood Product Manufacturing	Any facility whose primary activity is burnt wood articles (SIC 3999 / NAICS 321999) should be regulated under Sector A, but may continue to be regulated under Sector Y, or alternatively, under Sector AD. Sector A applies additional technology-based effluent limits comprised of good housekeeping measures, additional SWPPP requirements, and benchmark monitoring for COD and TSS. Sector Y does not apply additional requirements to these facilities and under Sector AD EPA could establish additional facility-specific monitoring and reporting requirements. Regulatory burden would be greater under Sector A.
		(matches and match books manufacturing)	**325998**	All Other Miscellaneous Chemical Product and Preparation Manufacturing	Any facility whose primary activity is matches and match books manufacturing (SIC 3999 / NAICS

					325998) should be regulated under Sector C, but may continue to be regulated under Sector Y, or alternatively, under Sector AD. Sectors C and Y do not require additional sector-specific requirements. EPA could establish additional facility-specific monitoring and reporting requirements under Sector AD. Regulatory burden is not expected to differ between Sectors C and Y.
		(plastics products such as combs, hair curlers, etc.)	**326199**	All Other Plastics Product Manufacturing	
		(hand operated hair clippers for humans)	**332211**	Cutlery and Flatware (except Precious) Manufacturing	Any facility whose primary activity is manufacturing hand operated hair clippers for humans (SIC 3999 / NAICS 332211) should be regulated under Sector AA, but may continue to be regulated under Sector Y, or alternatively, under Sector AD. Sector AA applies additional technology-based effluent limits comprised of good housekeeping measures, spill prevention and response procedures, and spills and leaks; additional SWPPP requirements; and additional inspection requirements. Sector Y does not require additional sector-specific requirements. EPA could establish additional facility-specific monitoring and reporting requirements under Sector AD. Regulatory burden would be greater under Sector AA.
		(tape measures)	**332212**	Hand and Edge Tool Manufacturing	Any facility whose primary activity is manufacturing tape measures (SIC 3999 / NAICS 332212) should be regulated under Sector AA, but may continue to be regulated under Sector Y, or alternatively, under Sector AD. Sector AA applies additional

					technology-based effluent limits comprised of good housekeeping measures, spill prevention and response procedures, and spills and leaks; additional SWPPP requirements; and additional inspection requirements. Sector Y does not require additional sector-specific requirements. EPA could establish additional facility-specific monitoring and reporting requirements under Sector AD. Regulatory burden would be greater under Sector AA.
		(flocking metal products for the trade)	**332812**	Metal Coating, Engraving (except Jewelry and Silverware), and Allied Services to Manufacturers	Any facility whose primary activity is manufacturing flocking metal products for the trade (SIC 3999 / NAICS 332812) should be regulated under Sector AA, but may continue to be regulated under Sector Y, or alternatively, under Sector AD. Sector AA applies additional technology-based effluent limits comprised of good housekeeping measures, spill prevention and response procedures, and spills and leaks; additional SWPPP requirements; and additional inspection requirements. Sector Y does not require additional sector-specific requirements. EPA could establish additional facility-specific monitoring and reporting requirements under Sector AD. Regulatory burden would be greater under Sector AA.
		(other miscellaneous metal products, such as combs, hair curlers, etc.)	**332999**	All Other Miscellaneous Fabricated Metal Product Manufacturing	Any facility whose primary activity is manufacturing other miscellaneous metal products, such as combs, hair curlers, etc. (SIC 3999 / NAICS 332999) should be regulated under Sector AA, but may continue to be regulated under Sector Y, or alternatively, under Sector AD. Sector

					AA applies additional technology-based effluent limits comprised of good housekeeping measures, spill prevention and response procedures, and spills and leaks; additional SWPPP requirements; and additional inspection requirements. Sector Y does not require additional sector-specific requirements. EPA could establish additional facility-specific monitoring and reporting requirements under Sector AD. Regulatory burden would be greater under Sector AA.
		(beauty and barber shop equipment, except chairs)	**333319**	Other Commercial and Service Industry Machinery Manufacturing	
		(lamp shades of paper or textile)	**335121**	Residential Electric Lighting Fixture Manufacturing	
		(electric hair clippers for humans)	**335211**	Electric Housewares and Household Fan Manufacturing	Any facility whose primary activity is manufacturing electric hair clippers for humans (SIC 3999 / NAICS 335211) should be regulated under Sector AC, but may continue to be regulated under Sector Y, or alternatively, under Sector AD. Sectors Y and AC do not apply sector-specific requirements to facilities manufacturing electric hair clippers for humans. EPA may establish facility-specific monitoring and reporting requirements under Sector AD. Regulatory burden is not expected to differ between Sectors Y and AC.
		(beauty and barber chairs)	**337127**	Institutional Furniture Manufacturing	Any facility whose primary activity is manufacturing beauty and barber chairs (SIC 3999 / NAICS 337127) should be regulated under Sector W, but may continue to be regulated under Sector Y, or alternatively, under Sector AD. Sector W applies additional SWPPP requirements to facilities manufacturing beauty and

					barber chairs. Sector Y applies no additional requirements and under Sector AD EPA could establish additional facility-specific monitoring and reporting requirements. Regulatory burden would be greater under Sector W.
		(embroidery kits)	**339932**	Game, Toy, and Children's Vehicle Manufacturing	
		(other miscellaneous products not specially provided for previously)	**339999**	All Other Miscellaneous Manufacturing	

Sector Z. Leather Tanning and Finishing

Sub-sector	SIC Codes		NAICS Codes		Notes
Z1	**3111**	Leather Tanning and Finishing	**316110**	Leather and Hide Tanning and Finishing	

Sector AA. Fabricated Metal Products

Sub-sector	SIC Codes		NAICS Codes		Notes
AA1	**3411**	Metal Cans	**332431**	Metal Can Manufacturing	
	3412	Metal Shipping Barrels, Drums, Kegs, and Pails	**332439**	Other Metal Container Manufacturing	
	3421	Cutlery (except hedge shears and trimmers, tinners' snips, and similar nonelectric hand tools)	**332211**	Cutlery and Flatware (except Precious) Manufacturing	
		(hedge shears and trimmers, tinners snips, and similar nonelectric hand tools)	**332212**	Hand and Edge Tool Manufacturing	
	3423	Hand and Edge Tools, Except Machine Tools and Handsaws	**332212**	Hand and Edge Tool Manufacturing	
	3425	Saw Blades and Handsaws	**332213**	Saw Blade and Handsaw Manufacturing	
	3429	Hardware, Not Elsewhere Classified (vacuum and insulated bottles, jugs, and chests)	**332439**	Other Metal Container Manufacturing	
		(except fire hose nozzles, hose couplings, vacuum and insulated bottles, jugs and chests, fireplace fixtures, time locks, turnbuckles, pulleys, tackle blocks, luggage and utility racks, sleep sofa mechanisms and chair glides, traps, handcuffs and	**332510**	Hardware Manufacturing	

		leg irons, ladder jacks, and other like metal products)			
		(turnbuckles and hose clamps)	**332722**	Bolt, Nut, Screw, Rivet, and Washer Manufacturing	
		(fire hose nozzles and hose couplings)	**332919**	Other Metal Valve and Pipe Fitting Manufacturing	
		(fireplace fixtures, traps, handcuffs and leg irons, ladder jacks, and other like metal products)	**332999**	All Other Miscellaneous Fabricated Metal Product Manufacturing	
		(pulleys, tackle blocks, block and tackle assemblies)	**333923**	Overhead Traveling Crane, Hoist, and Monorail System Manufacturing	
		(time locks)	**334518**	Watch, Clock, and Part Manufacturing	
		(luggage and utility racks)	**336399**	All Other Motor Vehicle Parts Manufacturing	
		(sleep sofa mechanisms and chair glides)	**337215**	Showcase, Partition, Shelving, and Locker Manufacturing	
	3431	Enameled Iron and Metal Sanitary Ware	**332998**	Enameled Iron and Metal Sanitary Ware Manufacturing	
	3432	Plumbing Fixture Fittings and Trim (except shower rods, lawn hose nozzles, and lawn sprinklers)	**332913**	Plumbing Fixture Fitting and Trim Manufacturing	
		(lawn hose nozzles and lawn sprinklers)	**332919**	Other Metal Valve and Pipe Fitting Manufacturing	
		(metal shower rods)	**332999**	All Other Miscellaneous Fabricated Metal Product Manufacturing	
	3443	Fabricated Plate Work (Boiler Shops) (fabricated plate work and metal weldments)	**332313**	Plate Work Manufacturing	
		(power boilers and heat exchangers)	**332410**	Power Boiler and Heat Exchanger Manufacturing	
		(heavy gauge tanks)	**332420**	Metal Tank (Heavy Gauge) Manufacturing	
		(metal cooling towers)	**333415**	Air-Conditioning and Warm Air Heating Equipment and Commercial and Industrial Refrigeration Equipment Manufacturing (metal cooling towers)	
	3444	Sheet Metal Work (stamped metal skylights)	**332321**	Metal Window and Door Manufacturing	
		(except sheet metal bins and vats, skylights, and sheet metal cooling towers)	**332322**	Sheet Metal Work Manufacturing	
		(metal bins and vats)	**332439**	Other Metal Container Manufacturing	
		(cooling towers, sheet metal)	**333415**	Air-Conditioning and Warm Air Heating Equipment and Commercial and Industrial Refrigeration Equipment Manufacturing	

	3446	Architectural and Ornamental Ironwork	**332323**	Ornamental and Architectural Metal Work Manufacturing	
	3448	Prefabricated Metal Buildings and Components	**332311**	Prefabricated Metal Building and Component Manufacturing	
	3449	Miscellaneous Structural Metal Work (custom roll forming)	**332114**	Custom Roll Forming	
		(fabricated bar joists and concrete reinforcing bars)	**332312**	Fabricated Structural Metal Manufacturing	
		(curtain wall and metal plaster bases and lath)	**332323**	Ornamental and Architectural Metal Work Manufacturing	
	3451	Screw Machine Products	**332721**	Precision Turned Product Manufacturing	
	3452	Bolts, Nuts, Screws, Rivets, and Washers	**332722**	Bolt, Nut, Screw, Rivet, and Washer Manufacturing	
	3462	Iron and Steel Forgings	**332111**	Iron and Steel Forging	
	3463	Nonferrous Forgings	**332112**	Nonferrous Forging	
	3465	Automotive Stampings	**336370**	Motor Vehicle Metal Stamping	
	3466	Crowns and Closures	**332115**	Crown and Closure Manufacturing	
	3469	Metal Stampings, Not Elsewhere Classified (except kitchen utensils, pots and pans for cooking, coins, and stamped metal boxes)	**332116**	Metal Stamping	
		(kitchen utensils, pots, and pans for cooking)	**332214**	Kitchen Utensil, Pot, and Pan Manufacturing	
		(stamped metal tool, cash, mail, and lunch boxes)	**332439**	Other Metal Container Manufacturing	
	3471	Electroplating, Plating, Polishing, Anodizing, and Coloring	**332813**	Electroplating, Plating, Polishing, Anodizing, and Coloring	
AA2	**3479**	Coating, Engraving, and Allied Services, Not Elsewhere Classified (except jewelry, silverware, and flatware engraving and etching)	**332812**	Metal Coating, Engraving (except Jewelry and Silverware), and Allied Services to Manufacturers	
		(precious metal jewelry engraving and etching)	**339911**	Jewelry (except Costume) Manufacturing	
		(silver and plated ware engraving and etching)	**339912**	Silverware and Holloware Manufacturing	
		(costume jewelry engraving and etching)	**339914**	Costume Jewelry and Novelty Manufacturing	
AA1	**3482**	Small Arms Ammunition	**332992**	Small Arms Ammunition Manufacturing	
	3483	Ammunition, Except for Small Arms	**332993**	Ammunition (except for Small Arms) Manufacturing	
	3484	Small Arms	**332994**	Small Arms Manufacturing	

	3489	Ordinance and Accessories, Not Elsewhere Classified	**332995**	Other Ordinance and Accessories Manufacturing	
	3491	Industrial Valves	**332911**	Industrial Valve Manufacturing	
	3492	Fluid Power Valves and Hose Fittings	**332912**	Fluid Power Valve and Hose Fitting Manufacturing	
	3493	Steel Springs, Except Wire	**332611**	Spring (Heavy Gauge) Manufacturing	
	3494	Valves and Pipe Fittings, Not Elsewhere Classified (except metal pipe hangers and supports)	**332919**	Other Metal Valve and Pipe Fitting Manufacturing	
		(metal pipe hangers and supports)	**332999**	All Other Miscellaneous Fabricated Metal Product Manufacturing	
	3495	Wire Springs (except watch and clock springs)	**332612**	Spring (Light Gauge) Manufacturing	
		(clock and watch springs)	**334518**	Watch, Clock, and Part Manufacturing	
	3496	Miscellaneous Fabricated Wire Products (potato mashers)	**332214**	Kitchen Utensil, Pot, and Pan Manufacturing	
		(except shopping carts and potato mashers)	**332618**	Other Fabricated Wire Product Manufacturing	
		(shopping carts made from purchased wire)	**333924**	Industrial Truck, Tractor, Trailer, and Stacker Machinery Manufacturing	
	3497	Metal Foil and Leaf (laminated aluminum foil rolls and sheets for flexible packaging uses)	**322225**	Laminated Aluminum Foil Manufacturing for Flexible Packaging Uses	
		(foil and foil containers)	**332999**	All Other Miscellaneous Fabricated Metal Product Manufacturing	
	3498	Fabricated Pipe and Pipe Fittings	**332996**	Fabricated Pipe and Pipe Fitting Manufacturing	
	3499	Fabricated Metal Products, Not Elsewhere Classified (powder metallurgy)	**332117**	Powder Metallurgy Part Manufacturing	
		(metal boxes)	**332439**	Other Metal Container Manufacturing	
		(safe and vault locks)	**332510**	Hardware Manufacturing	
		(metal aerosol valves)	**332919**	Other Metal Valve and Pipe Fitting Manufacturing	
		(other metal products)	**332999**	All Other Miscellaneous Fabricated Metal Product Manufacturing	
		(metal automobile seat frames)	**336360**	Motor Vehicle Seating and Interior Trim Manufacturing	
		(metal furniture frames)	**337215**	Showcase, Partition, Shelving, and Locker Manufacturing	
	3911	Jewelry, Precious Metal	**339911**	Jewelry (except Costume) Manufacturing	

	3914	Silverware, Plated Ware, and Stainless Steel Ware (cutlery and flatware, nonprecious and precious plated)	**332211**	Cutlery and Flatware (except Precious) Manufacturing	
		(precious metal plated hollowware)	**332999**	All Other Miscellaneous Fabricated Metal Product Manufacturing	
		(except nonprecious and precious plated metal cutlery, flatware, and hollowware)	**339912**	Silverware and Holloware Manufacturing	
	3915	Jewelers Findings and Materials and Lapidary Work			
		(watch jewels)	**334518**	Watch, Clock, and Part Manufacturing	Any facility whose primary activity is manufacturing watch jewels (SIC 3915 / NAICS 334518) should be regulated under Sector AC, but may continue to be regulated under Sector AA, or alternatively, under Sector AD. Sector AA applies additional technology-based effluent limits comprising good housekeeping measures, spill prevention and response, and spills and leaks; additional SWPPP requirements; and additional inspection requirements. Sector AC does not apply additional sector-specific requirements and EPA may establish facility-specific monitoring and reporting requirements under Sector AD. Regulatory burden would be greater under Sector AA.
		(except watch jewels)	**339913**	Jewelers' Material and Lapidary Work Manufacturing	

Sector AB. Transportation Equipment, Industrial or Commercial Machinery

Sub-sector	SIC Codes		NAICS Codes		Notes
AB1	**3511**	Steam, Gas, and Hydraulic Turbines, and Turbine Generator Set Units	**333611**	Turbine and Turbine Generator Set Units Manufacturing	
	3519	Internal Combustion Engines, Not Elsewhere Classified (except stationary engine radiators)	**333618**	Other Engine Equipment Manufacturing	
		(stationary engine radiators)	**336399**	All Other Motor Vehicle Parts Manufacturing	

	3523	Farm Machinery and Equipment (hand hair clippers for animals)	**332212**	Hand and Edge Tool Manufacturing	
		(corrals, stalls, and holding gates)	**332323**	Ornamental and Architectural Metal Work Manufacturing	
		(except corrals, stalls, holding gates, hand clippers for animals, and farm conveyors/elevators)	**333111**	Farm Machinery and Equipment Manufacturing	
		(farm conveyors and elevators)	**333922**	Conveyor and Conveying Equipment Manufacturing	
	3524	Lawn and Garden Tractors and Home Lawn and Garden Equipment (nonpowered lawnmowers)	**332212**	Hand and Edge Tool Manufacturing	
		(except nonpowered lawnmowers)	**333112**	Lawn and Garden Tractor and Home Lawn and Garden Equipment Manufacturing	
	3531	Construction Machinery and Equipment (except railway track maintenance equipment; winches, aerial work platforms; and automotive wrecker hoists)	**333120**	Construction Machinery Manufacturing	
		(winches, aerial work platforms, automobile wrecker hoists, locomotive cranes, and ship cranes)	**333923**	Overhead Traveling Crane, Hoist, and Monorail System Manufacturing	
		(railway track maintenance equipment)	**336510**	Railroad Rolling Stock Manufacturing	
	3532	Mining Machinery and Equipment, Except Oil and Gas Field Machinery and Equipment	**333131**	Mining Machinery and Equipment Manufacturing	
	3533	Oil and Gas Field Machinery and Equipment	**333132**	Oil and Gas Field Machinery and Equipment Manufacturing	
	3534	Elevators and Moving Stairways	**333921**	Elevators and Moving Stairway Manufacturing	
	3535	Conveyors and Conveying Equipment	**333922**	Conveyors and Conveying Equipment Manufacturing	
	3536	Overhead Traveling Cranes, Hoists, and Monorail Systems	**333923**	Overhead Traveling Cranes, Hoists, and Monorail System Manufacturing	
	3537	Industrial Trucks, Tractors, Trailers, and Stackers (metal air cargo containers)	**332439**	Other Metal Container Manufacturing	
		(metal pallets)	**332999**	All Other Miscellaneous Fabricated Metal Product Manufacturing	

		(except metal pallets and metal air cargo containers)	**333924**	Industrial Truck, Tractor, Trailer, and Stacker Machinery Manufacturing	
	3541	Machine Tools, Metal Cutting Types	**333512**	Machine Tool (Metal Cutting Types) Manufacturing	
	3542	Machine Tools, Metal Forming Types	**333513**	Machine Tool (Metal Forming Types) Manufacturing	
	3543	Industrial Patterns	**332997**	Industrial Pattern Manufacturing	
	3544	Special Dies and Tools, Die Sets, Jigs and Fixtures, and Industrial Molds (industrial molds)	**333511**	Industrial Mold Manufacturing	
		(except molds)	**333514**	Special Die and Tool, Die Set, Jig, and Fixture Manufacturing	
	3545	Cutting Tools, Machine Tool Accessories, and Machinist Precision Measuring Devices (precision measuring devices)	**332212**	Hand and Edge Tool Manufacturing	
		(except precision measuring devices)	**333515**	Cutting Tool and Machine Tool Accessory Manufacturing	
	3546	Power-Driven Handtools	**333991**	Power-Driven Handtool Manufacturing	
	3547	Rolling Mill Machinery and Equipment	**333516**	Rolling Mill Machinery and Equipment Manufacturing	
	3548	Electric and Gas Welding and Soldering Equipment (except transformers for arc-welding)	**333992**	Welding and Soldering Equipment Manufacturing	
		(transformers for arc-welders)	**335311**	Power, Distribution, and Specialty Transformer Manufacturing	
	3549	Metalworking Machinery, Not Elsewhere Classified	**333518**	Other Metalworking Machinery Manufacturing	
	3552	Textile Machinery	**333292**	Textile Machinery Manufacturing	
	3553	Woodworking Machinery	**333210**	Sawmill and Woodworking Machinery Manufacturing	
	3554	Paper Industries Machinery	**333291**	Paper Industry Machinery Manufacturing	
	3555	Printing Trades Machinery and Equipment	**333293**	Printing Machinery and Equipment Manufacturing	
	3556	Food Products Machinery	**333294**	Food Product Machinery Manufacturing	
	3559	Special Industry Machinery, Not Elsewhere Classified (nuclear control rod drive mechanisms)	**332410**	Power Boiler and Heat Exchanger Manufacturing	
		(cotton ginning machinery)	**333111**	Farm Machinery and Equipment Manufacturing	
		(rubber and plastics manufacturing machinery)	**333220**	Plastics and Rubber Industry Machinery Manufacturing	

		(semiconductor machinery manufacturing)	**333295**	Semiconductor Machinery Manufacturing	
		(except rubber and plastics manufacturing machinery, semiconductor manufacturing machinery, and automotive maintenance equipment)	**333298**	All Other Industrial Machinery Manufacturing	
		(automotive maintenance equipment)	**333319**	Other Commercial and Service Industry Machinery Manufacturing	
	3561	Pumps and Pumping Equipment	**333911**	Pump and Pumping Equipment Manufacturing	
	3562	Ball and Roller Bearings	**332991**	Ball and Roller Bearing Manufacturing	
	3563	Air and Gas Compressors	**333912**	Air and Gas Compressor Manufacturing	
	3564	Industrial and Commercial Fans and Blowers and Air Purification Equipment (air purification equipment)	**333411**	Air Purification Equipment Manufacturing	
		(fans and blowers)	**333412**	Industrial and Commercial Fan and Blower Manufacturing	
	3565	Packaging Machinery	**333993**	Packaging Machinery Manufacturing	
	3566	Speed Changers, Industrial High-Speed Drives, and Gears	**333612**	Speed Changer, Industrial High-Speed Drives, and Gear Manufacturing	
	3567	Industrial Process Furnaces and Ovens	**333994**	Industrial Process Furnace and Oven Manufacturing	
	3568	Mechanical Power Transmission Equipment, Not Elsewhere Classified	**333613**	Mechanical Power Transmission Equipment Manufacturing	
	3569	General Industrial Machinery and Equipment, Not Elsewhere Classified (textile fire hose)	**314999**	All Other Miscellaneous Textile Product Mills	
		(electric swimming pool heaters)	**333414**	Heating Equipment (except Warm Air Furnaces) Manufacturing	
		(except fire hoses and electric swimming pool heaters)	**333999**	All Other Miscellaneous General Purpose Machinery Manufacturing	
	3581	Automatic Vending Machines	**333311**	Automatic Vending Machine Manufacturing	
	3582	Commercial Laundry, Drycleaning, and Pressing Machines	**333312**	Commercial Laundry, Drycleaning, and Pressing Machine Manufacturing	
	3585	Air-Conditioning and Warm Air Heating Equipment and Commercial and Industrial Refrigeration Equipment (except motor vehicle air-conditioning)	**333415**	Air-Conditioning and Warm Air Heating Equipment and Commercial and Industrial Refrigeration Equipment Manufacturing	
		(motor vehicle air-conditioning)	**336391**	Motor Vehicle Air-Conditioning Manufacturing	

	3586	Measuring and Dispensing Pumps	**333913**	Measuring and Dispensing Pump Manufacturing	
	3589	Service Industry Machinery, Not Elsewhere Classified	**333319**	Other Commercial and Service Industry Machinery Manufacturing	
	3592	Carburetors, Pistons, Piston Rings, and Valves	**336311**	Carburetor, Piston, Piston Ring, and Valve Manufacturing	
	3593	Fluid Power Cylinders and Actuators	**333995**	Fluid Power Cylinder and Actuator Manufacturing	
	3594	Fluid Power Pumps and Motors	**333996**	Fluid Power Pumps and Motors Manufacturing	
	3596	Scales and Balances, Except Laboratory	**333997**	Scale and Balance (except Laboratory) Manufacturing	
	3599	Industrial and Commercial Machinery and Equipment, Not Elsewhere Classified (machine shops)	**332710**	Machine Shops	
		(grinding castings for the trade)	**332813**	Electroplating, Plating, Polishing, Anodizing and Coloring	
		(flexible metal hose)	**332999**	All Other Miscellaneous Fabricated Metal Product Manufacturing	
		(carnival amusement park equipment)	**333319**	Other Commercial and Service Industry Machinery Manufacturing	
		(other industrial and commercial machinery and equipment)	**333999**	All Other Miscellaneous General Purpose Machinery Manufacturing	
		(water leak detectors)	**334519**	Other Measuring and Controlling Device Manufacturing	
		(gasoline, oil, and intake filters for internal combustion engines, except for motor vehicles)	**336399**	All Other Motor Vehicle Parts Manufacturing	
	3711	Motor Vehicles and Passenger Car Bodies (automobiles)	**336111**	Automobile Manufacturing	
		(light trucks and utility vehicles)	**336112**	Light Truck and Utility Vehicle Manufacturing	
		(heavy duty trucks)	**336120**	Heavy Duty Truck Manufacturing	
		(kit car and other passenger car bodies)	**336211**	Motor Vehicle Body Manufacturing	
		(military armored vehicles)	**336992**	Military Armored Vehicle, Tank, and Tank Component Manufacturing	
	3713	Truck and Bus Bodies	**336211**	Motor Vehicle Body Manufacturing	
	3714	Motor Vehicle Parts and Accessories (dump truck lifting mechanisms and fifth wheels)	**336211**	Motor Vehicle Body Manufacturing	
		(gasoline engines and engine parts including rebuilt)	**336312**	Gasoline Engine and Engine Parts Manufacturing	

		(wiring harness sets, other than ignition; block heaters and battery heaters; instrument board assemblies; permanent defrosters; windshield washer-wiper mechanisms; cruise control mechanisms; and other electrical equipment for internal combustion engines)	**336322**	Other Motor Vehicle Electrical and Electronic Equipment Manufacturing	
		(steering and suspension parts)	**336330**	Motor Vehicle Steering and Suspension Components (except Spring) Manufacturing	
		(brake and brake systems, including assemblies)	**336340**	Motor Vehicle Brake System Manufacturing	
		(transmissions and power train parts, including rebuilding)	**336350**	Motor Vehicle Transmission and Power Train Parts Manufacturing	
		(except truck and bus bodies, trailers, engine and engine parts, motor vehicle electrical and electronic equipment, motor vehicle steering and suspension components, motor vehicle brake systems, and motor vehicle transmission and power train parts)	**336399**	All Other Motor Vehicle Parts Manufacturing	
	3715	Truck Trailers	**336212**	Truck Trailer Manufacturing	
	3716	Motor Homes	**336213**	Motor Home Manufacturing	
	3721	Aircraft (except research and development not producing prototypes)	**336411**	Aircraft Manufacturing	
	3724	Aircraft Engines and Engine Parts (except research and development not producing prototypes)	**336412**	Aircraft Engine and Engine Parts Manufacturing	
	3728	Aircraft Parts and Auxiliary Equipment, Not Elsewhere Classified (fluid power aircraft subassemblies)	**332912**	Fluid Power Valve and Hose Fitting Manufacturing	
		(target drones)	**336411**	Aircraft Manufacturing	
		(except fluid power aircraft subassemblies, target drones, and research and development not producing prototypes)	**336413**	Other Aircraft Part and Auxiliary Equipment Manufacturing	
	3743	Railroad Equipment (locomotive fuel lubricating or cooling medium pumps)	**333911**	Pump and Pumping Equipment Manufacturing	
		(except locomotive fuel lubricating or cooling medium pumps)	**336510**	Railroad Rolling Stock Manufacturing	

	3751	Motorcycles, Bicycles, and Parts	**336991**	Motorcycle, Bicycle, and Parts Manufacturing	
	3761	Guided Missiles and Space Vehicles (except research and development not producing prototypes)	**336414**	Guided Missile and Space Vehicle Manufacturing	
	3764	Guided Missile and Space Vehicle Propulsion Units and Propulsion Unit Parts (except research and development not producing prototypes)	**336415**	Guided Missile and Space Vehicle Propulsion Unit and Propulsion Unit Parts Manufacturing	
	3769	Guided Missile and Space Vehicle Parts and Auxiliary Equipment, Not Elsewhere Classified (except research and development not producing prototypes)	**336419**	Other Guided Missile and Space Vehicle Parts and Auxiliary Equipment Manufacturing	
	3792	Travel Trailers and Campers	**336214**	Travel Trailer and Camper Manufacturing	
	3795	Tanks and Tank Components	**336992**	Military Armored Vehicle, Tank, and Tank Component Manufacturing	
	3799	Transportation Equipment, Not Elsewhere Classified (wheelbarrows)	**333924**	Industrial Truck, Tractor, Trailer, and Stacker Machinery Manufacturing	
		(automobile, boat, utility and light truck trailers)	**336214**	Travel Trailer and Camper Manufacturing	
		(trailer hitches)	**336399**	All Other Motor Vehicle Parts Manufacturing	
		(except automobile, boat, utility light truck trailers, trailer hitches, and wheelbarrows)	**336999**	All Other Transportation Equipment Manufacturing	

Sector AC. Electronic, Electrical, Photographic and Optical Goods

Sub-sector	SIC Codes		NAICS Codes		Notes
AC1	**3571**	Electronic Computers	**334111**	Electronic Computer Manufacturing	
	3572	Computer Storage Devices	**334112**	Computer Storage Device Manufacturing	
	3575	Computer Terminals	**334113**	Computer Terminal Manufacturing	
	3577	Computer Peripheral Equipment, Not Elsewhere Classified (except plotter controllers and magnetic tape head cleaners)	**334119**	Other Computer Peripheral Equipment Manufacturing	
		(plotter controllers)	**334418**	Printed Circuit Assembly (Electronic Assembly) Manufacturing	
		(magnetic tape head cleaners)	**334613**	Magnetic and Optical Recording Media Manufacturing	

	3578	Calculating and Accounting Machinery, Except Electronic Computers (change making machines)	**333311**	Automatic Vending Machine Manufacturing	
		(except point of sales terminals, change making machines and funds transfer devices)	**333313**	Office Machinery Manufacturing	
		(point of sale terminals and fund transfer devices)	**334119**	Other Computer Peripheral Equipment Manufacturing	
	3579	Office Machines, Not Elsewhere Classified (except timeclocks, time stamps, pencil sharpeners, stapling machines, etc.)	**333313**	Office Machinery Manufacturing	
		(time clocks and other time recording devices)	**334518**	Watch, Clock, and Part Manufacturing	
		(pencil sharpeners, staplers and other office equipment)	**339942**	Lead Pencil and Art Good Manufacturing	
	3612	Power, Distribution, and Specialty Transformers	**335311**	Power, Distribution, and Specialty Transformer Manufacturing	
	3613	Switchgear and Switchboard Apparatus	**335313**	Switchgear and Switchboard Apparatus Manufacturing	
	3621	Motors and Generators	**335312**	Motors and Generator Manufacturing	
	3624	Carbon and Graphite Products	**335991**	Carbon and Graphite Product Manufacturing	
	3625	Relays and Industrial Controls	**335314**	Relay and Industrial Control Manufacturing	
	3629	Electrical Industrial Apparatus, Not Elsewhere Classified	**335999**	All Other Miscellaneous Electrical Equipment and Component Manufacturing	
	3631	Household Cooking Equipment	**335221**	Household Cooking Appliance Manufacturing	
	3632	Household Refrigerators and Home and Farm Freezers	**335222**	Household Refrigerator and Home Freezer Manufacturing	
	3633	Household Laundry Equipment	**335224**	Household Laundry Equipment Manufacturing	
	3634	Electric Housewares and Fans (wall and baseboard heating units for permanent installation)	**333414**	Heating Equipment (except Warm Air Furnaces) Manufacturing	
		(except wall and baseboard heating units for permanent installation, electronic cigarette lighters, and wall mount restroom hand dryers)	**335211**	Electric Housewares and Household Fan Manufacturing	
		(electronic cigarette lighters)	**339999**	All Other Miscellaneous Manufacturing	
	3635	Household Vacuum Cleaners	**335212**	Household Vacuum Cleaner Manufacturing	
	3639	Household Appliances, Not Elsewhere Classified (household sewing machines)	**333298**	All Other Industrial Machinery Manufacturing	

		(floor waxing and floor polishing machines)	**335212**	Household Vacuum Cleaner Manufacturing	
		(except floor waxing and floor polishing machines, and household sewing machines)	**335228**	Other Major Household Appliance Manufacturing	
	3641	Electric Lamp Bulbs and Tubes	**335110**	Electric Lamp Bulbs and Part Manufacturing	
	3643	Current-Carrying Wiring Devices	**335931**	Current-Carrying Wiring Device Manufacturing	
	3644	Noncurrent-Carrying Wiring Devices			
		(fish wire, electrical wiring tool)	**332212**	Hand and Edge Tool Manufacturing	Any facility whose primary activity is manufacturing fish wire, electrical wiring tool (SIC 3644 / NAICS 332212) should be regulated under Sector AA, but may continue to be regulated under Sector AC, or alternatively, under Sector AD. Sector AA applies additional technology-based effluent limits comprising good housekeeping measures, spill prevention and response, and spills and leaks; additional SWPPP requirements; and additional inspection requirements. Sector AC does not apply additional sector-specific requirements and EPA may establish facility-specific monitoring and reporting requirements under Sector AD. Regulatory burden would be greater under Sector AA.
		(except fishwire, electrical wiring tool)	**335932**	Noncurrent-Carrying Wiring Device Manufacturing	
	3645	Residential Electric Lighting Fixtures	**335121**	Residential Electric Lighting Fixture Manufacturing	
	3646	Commercial, Industrial, and Institutional Electric Lighting Fixtures	**335122**	Commercial, Industrial, and Institutional Electric Lighting Fixture Manufacturing	
	3647	Vehicular Lighting Equipment	**336321**	Vehicular Lighting Equipment Manufacturing	
	3648	Lighting Equipment, Not Elsewhere Classified	**335129**	Other Lighting Equipment Manufacturing	
	3651	Household Audio and Video Equipment	**334310**	Audio and Video Equipment Manufacturing	

	3652	Phonograph Records and Prerecorded Audio Tapes and Disks (reproduction of all other media except video)	**334612**	Prerecorded Compact Disc (except Software), Tape, and Record Reproducing	
	3661	Telephone and Telegraph Apparatus (except consumer external modems)	**334210**	Telephone Apparatus Manufacturing	
		(consumer external modems)	**334418**	Printed Circuit Assembly (Electronic Assembly) Manufacturing	
	3663	Radio and Television Broadcasting and Communications Equipment	**334220**	Radio and Television Broadcasting and Wireless Communications Equipment Manufacturing	
	3669	Communications Equipment, Not Elsewhere Classified	**334290**	Other Communications Equipment Manufacturing	
	3671	Electron Tubes	**334411**	Electron Tube Manufacturing	
	3672	Printed Circuit Boards	**334412**	Bare Printed Circuit Board Manufacturing	
	3674	Semiconductors and Related Devices	**334413**	Semiconductor and Related Device Manufacturing	
	3675	Electronic Capacitors	**334414**	Electronic Capacitor Manufacturing	
	3676	Electronic Resistors	**334415**	Electronic Resistor Manufacturing	
	3677	Electronic Coils, Transformers, and Other Inductors	**334416**	Electronic Coil, Transformer, and Other Inductor Manufacturing	
	3678	Electronic Connectors	**334417**	Electronic Connector Manufacturing	
	3679	Electronic Components, Not Elsewhere Classified (antennas)	**334220**	Radio and Television Broadcasting and Wireless Communications Equipment Manufacturing	
		(radio headphones)	**334310**	Audio and Video Equipment Manufacturing	
		(printed circuit/electronic assembly manufacturing)	**334418**	Printed Circuit Assembly (Electronic Assembly) Manufacturing	
		(other electronic components)	**334419**	Other Electronic Component Manufacturing	
	3691	Storage Batteries	**335911**	Storage Battery Manufacturing	
	3692	Primary Batteries, Dry and Wet	**335912**	Primary Battery Manufacturing	
	3694	Electrical Equipment for Internal Combustion Engines	**336322**	Other Motor Vehicle Electrical and Electronic Equipment Manufacturing	
	3695	Magnetic and Optical Recording Media	**334613**	Magnetic and Optical Recording Media Manufacturing	
	3699	Electrical Machinery, Equipment, and Supplies, Not Elsewhere Classified (electronic teaching machines and flight simulators)	**333319**	Other Commercial and Service Industry Machinery Manufacturing	
		(outboard electric motors)	**333618**	Other Engine Equipment Manufacturing	Any facility whose primary activity is manufacturing outboard electric

					motors (SIC 3699 / NAICS 333618) should be regulated under Sector AB, but may continue to be regulated under Sector AC, or alternatively, under Sector AD. Sector AB applies additional sector-specific SWPPP requirements. Sector AC does not apply additional sector-specific requirements and EPA may establish facility-specific monitoring and reporting requirements under Sector AD. Regulatory burden would be greater under Sector AB.
		(laser welding and soldering equipment)	**333992**	Welding and Soldering Equipment Manufacturing	
		(Christmas tree lighting sets, electric insect lamps, electric fireplace logs, and trouble lights)	**335129**	Other Lighting Equipment Manufacturing	
		(other electrical industrial apparatus)	**335999**	All Other Miscellaneous Electrical Equipment and Component Manufacturing	
	3812	Search, Detection, Navigation, Guidance, Aeronautical, and Nautical Systems and Instruments	**334511**	Search, Detection, Navigation, Guidance, Aeronautical, and Nautical System and Instrument Manufacturing	
	3821	Laboratory Apparatus and Furniture	**339111**	Laboratory Apparatus and Furniture Manufacturing	
	3822	Automatic Controls for Regulating Residential and Commercial Environments and Appliances	**334512**	Automatic Environmental Control Manufacturing for Residential, Commercial, and Appliance Use	
	3823	Industrial Instruments for Measurement, Display, and Control of Process Variables; and Related Products	**334513**	Instruments and Related Products Manufacturing for Measuring, Displaying, and Controlling Industrial Process Variables	
	3824	Totalizing Fluid Meters and Counting Devices	**334514**	Totalizing Fluid Meter and Counting Device Manufacturing	
	3825	Instruments for Measuring and Testing of Electricity and Electrical Signals			
		(automotive ammeters and voltmeters)	**334514**	Totalizing Fluid Meter and Counting Device Manufacturing	
		(except automotive instruments)	**334515**	Instrument Manufacturing for Measuring and Testing Electricity and Electrical Signals	

	3826	Laboratory Analytical Instruments	**334516**	Analytical Laboratory Instrument Manufacturing	
	3827	Optical Instruments and Lenses	**333314**	Optical Instruments and Lens Manufacturing	
	3829	Measuring and Controlling Devices, Not Elsewhere Classified			
		(motor vehicle gauges)	**334514**	Totalizing Fluid Meter and Counting Device Manufacturing	
		(electronic chronometers)	**334518**	Watch, Clock, and Part Manufacturing	
		(except medical thermometers, electronic chronometers and motor vehicle gauges)	**334519**	Other Measuring and Controlling Device Manufacturing	
		(medical thermometers)	**339112**	Surgical and Medical Instrument Manufacturing	
	3841	Surgical and Medical Instruments and Apparatus			
		(tranquilizer guns)	**332994**	Small Arms Manufacturing	Any facility whose primary activity is manufacturing tranquilizer guns (SIC 3841 / NAICS 332994) should be regulated under Sector AA, but may continue to be regulated under Sector AC, or alternatively, under Sector AD. Sector AA applies additional technology-based effluent limits comprising good housekeeping measures, spill prevention and response, and spills and leaks; additional SWPPP requirements; and additional inspection requirements. Sector AC does not apply additional sector-specific requirements and EPA may establish facility-specific monitoring and reporting requirements under Sector AD. Regulatory burden would be greater under Sector AA.
		(operating room tables)	**339111**	Laboratory Apparatus and Furniture Manufacturing	
		(except tranquilizer guns and operating room tables)	**339112**	Surgical and Medical Instrument Manufacturing	

	3842	Orthopedic, Prosthetic, and Surgical Appliances and Supplies (incontinent pads and bed pads)	**322291**	Sanitary Paper Product Manufacturing	Any facility whose primary activity is manufacturing incontinent pads and bed pads (SIC 3842 / NAICS 322291) should be regulated under Sector B, but may continue to be regulated under Sector AC, or alternatively, under Sector AD. Sectors B and AC do not apply additional sector-specific requirements. EPA may require additional facility-specific monitoring and reporting requirement under Sector AD. Regulatory burden is not expected to differ between Sectors B and AC.
		(electronic hearing aids)	**334510**	Electromedical and Electrotherapeutic Apparatus Manufacturing	
		(except electronic hearing aids, incontinent pads, anatomical models, and bed pads)	**339113**	Surgical Appliance and Supplies Manufacturing	
		(anatomical models)	**339999**	All Other Miscellaneous Manufacturing	
	3843	Dental Equipment and Supplies	**339114**	Dental Equipment and Supplies Manufacturing	
	3844	X-Ray Apparatus and Tubes and Related Irradiation Apparatus	**334517**	Irradiation Apparatus Manufacturing	
	3845	Electromedical and Electrotherapeutic Apparatus (except CT and CAT scanners)	**334510**	Electromedical and Electrotherapeutic Apparatus Manufacturing	
		(CT and CAT Scanners)	**334517**	Irradiation Apparatus Manufacturing	
	3851	Ophthalmic Goods (intraoccular lenses, i.e., surgical implants)	**339113**	Surgical Appliance and Supplies Manufacturing	
		(except intraocular lenses)	**339115**	Ophthalmic Goods Manufacturing	
	3861	Photographic Equipment and Supplies (photographic films, paper, plates and chemicals)	**325992**	Photographic Film, Paper, Plate, and Chemical Manufacturing	
		(except photographic film, paper, plates, and chemicals)	**333315**	Photographic and Photocopying Equipment Manufacturing	
	3873	Watches, Clocks, Clockwork Operated Devices, and Parts	**334518**	Watch, Clock, and Part Manufacturing	

Sector AD. Non-Classified Facilities

Sub-Sector	Narrative Description	Notes
AD1	Other stormwater discharges designated by the Director as needing a permit (see 40 CFR 122.26(a)(9)(i)(C) & (D)) or any facility discharging stormwater associated with industrial activity not described by any of Sectors A-AC. NOTE: Facilities may not elect to be covered under Sector AD. Only the Director may assign a facility to Sector AD.	

Appendix O - Summary of Reports Permit Submittals

Permit Section	Report/Submittal	Frequency	Due Date(s)	Where to Submit
Part 1.1.4.5	**Endangered and Threatened Species Appendix E Criterion C Eligibility Form** (Applicable only for operators seeking coverage under Part 1.1.4.5 eligibility criterion C).	Once, if applicable	At least 30 days prior to submitting the NOI for permit coverage	Email to msgpesa@epa.gov
Part 1.2	**New Discharger:** Submittal of Notice of Intent (NOI) for Permit Coverage	Once per permit term	A minimum of 30 days prior to commencing discharge	Electronically using the NPDES eReporting Tool (NeT) for MSGP
Part 1.2	**Existing Discharger:** Submittal of Notice of Intent (NOI) for Permit Coverage	Once per permit term	No later than Septemer 2, 2015. However, if you have not previously obtained coverage under an NPDES permit, you must submit your NOI immediately.	Electronically using the NPDES eReporting Tool (NeT) for MSGP
Part 1.3	**Notice of Termination**	Once, if applicable	Within 30 days after: • a new operator takes over responsibility for the facility; or • operations and stormwater discharges have ceased; or • for Sector G, H, or J facilities, the applicable termination requirements have been met; or • alternative permit coverage has been obtained	Electronically using the NPDES eReporting Tool (NeT) for MSGP
Part 1.4	**Conditional "No Exposure" Certification Form**	If eligible, once every 5 years	As necessary	Electronically using the NPDES eReporting Tool (NeT) for MSGP

Permit Section	Report/Submittal	Frequency	Due Date(s)	Where to Submit
Part 3.1.2	**Routine Inspection Documentation**	At least quarterly	By the end of the quarter.	Reports are kept with SWPPP
Part 3.2.2	**Quarterly Visual Assessment Documentation**	At least quarterly	By the end of the quarter.	Reports are kept with SWPPP
Part 4.4	**Corrective Action Documentation**	• Document existence of corrective action condition within 24 hours of becoming aware of the condition • Document corrective actions taken or to be taken within 14 days from the time of discovery of the condition	As necessary	Reports are kept with SWPPP
Part 5 Part 7.3	**Stormwater Pollution Prevention Plan (SWPPP)**	• Provide URL for SWPPP or provide SWPPP information directly on the NOI form. • Update the on-site SWPPP as site conditions indicate. At minimum, the SWPPP must be modified based on corrective actions and deadlines required under Part 4.2.	Develop initial SWPPP prior to the submittal of NOI form. Update the SWPPP information included on URL or on NOI form, at a minimum, no later than 45 days after conducting the final routine facility inspection for the year.	Electronically using the NPDES eReporting Tool (NeT) for MSGP
Part 6 Part 7.4	**Discharge Monitoring Reports (DMRs)**	• 1/quarter for benchmark monitoring • 1/year for numeric effluent limitation monitoring • 1/year for impaired waters monitoring	Within 30 days of receiving your full laboratory results for all monitored outfalls during the reporting period.	Electronically using NetDMR
Part 7.5	**Annual Report**	1/year	By January 30th	Electronically using the NPDES eReporting Tool (NeT) for MSGP
Part 7.6	**Exceedance Report for Numeric Effluent Limitations**	If applicable	30 days after lab results if 30-day follow-up monitoirng indicates exceedance	Follow-up monitoring submitted Electronically using NetDMR Exceedance eports submitted directly to the EPA Regional Office listed in Part 7.9.1 of the permit

Permit Section	Report/Submittal	Frequency	Due Date(s)	Where to Submit
Part 7.7	**Additional Reporting (Noncompliance endangering health, reportable quantity spills, etc.)**	As necessary	Varies – see Part 7.7	

Appendix P - List of Federal CERCLA Sites

Part 1.1.4.10 of the MSGP has special requirements for discharges to a federal CERCLA site.[3]

If your facility discharges to one of the federal CERCLA sites listed below, you are ineligible for coverage under this permit, unless you notify the EPA Regional Office in advance and the EPA Regional Office determines that you are eligible for permit coverage. In determining eligibility for coverage under Part 1.1.4.10, the EPA Regional Office may evaluate whether you have included appropriate controls and implementation procedures designed to ensure your discharge will not lead to recontamination of aquatic media at the CERCLA Site, such that it would cause or contribute to a water quality standard exceedance. If it is determined that your facility discharges to a CERCLA Site listed below after you have obtained coverage under this permit, you must contact your applicable EPA Regional Office to develop appropriate controls and/or implementation procedures, as necessary, to ensure that your discharges will not lead to recontamination of aquatic media at the CERCLA Site such that they would cause or contribute to a water quality standard exceedance.

EPA Region 10

The CERCLA Sites and the receiving waters associated with these sites to which the requirements of Part 1.1.4.10 apply are listed in the table below. The areas where the permit applies are enumerated in Appendix C of the permit. For maps of CERCLA sites in Region 10 identified within this table, please check the Region 10 Superfund list viewable at http://yosemite.epa.gov/R10/cleanup.nsf/sites/cleanuplist.

Operators who discharge / intend to discharge into the receiving waters listed below must first contact the EPA Regional Office before submitting an NOI. Contact information is viewable at: http://yosemite.epa.gov/r10/water.nsf/Stormwater/industrial/.

Similarly, if you have received notice from EPA that the facility to be covered under the MSGP is considered a potential source to a clean up site, you must first contact the Regional EPA office before submitting an NOI.

	Waterbody (HUC code/Watershed)	**Superfund Sites CERCLIS ID Latitude / Longitude Major Contaminants**
ID	St. Joe River; Coeur d'Alene Lake Basin	St. Maries Creosote IDSFN1002095 47.191697 / -116.343000LPAHs, HPAHs

[3] "CERCLA site" means a facility as defined in Section 101(9) of the Comprehensive Environmental Response, Compensation and Liability Act (CERCLA), 42 U.S.C. § 9601(9), that is undergoing a remedial investigation and feasibility study, or for which a Record of Decision for remedial action has been issued in accordance with the National Contingency Plan, 40 C.F.R. Part 300.

WA	Commencement Bay, Puget Sound	Commencement Bay, Near Shore/Tide Flats WAD980726368 47.155998 / -122.245998Dioxins, furans, arsenic, copper, lead, zinc, 4-methyl-phenol, Hex-CB, HPAHs, PCBs, PCE, cadmium, mercury, LPAHs
WA	Duwamish Waterway; Elliott Bay; Puget Sound	Harbor Island (Lead) WAD980722839 47.344584 / -122.210792Lead, arsenic, copper, HPAHs, LPAHs, mercury,PCBs, zinc, TBT
WA	Clam Bay; Puget Sound	Old Navy Dump/ Manchester Lab WA8680030931 47.342798 / -122.325298 PCBs, copper, lead, zinc, silver, 2,4-dimethyl-phenol, PCBs
WA	Elliott Bay; Puget Sound	Pacific Sound Resources WAD009248287 47.345639 / -122.215998LMWPAHs, HMWPAHs, PCBs
WA	Columbia River	Upper Columbia River (T2) WASFN1002171 47.5722 / -118.5846
WA	Puget Sound	Puget Sound Naval Shipyard WA2170023418 47.333298 / -122.384999PCBs, mercury
WA	Puget Sound	Wycoff / Eagle Harbor WAD009248295 47.371798 / -122.310012Mercury, LPAHs, HPAHs,
WA	Duwamish Waterway; Elliott Bay; Puget Sound	Lower Duwamish Waterway (T2) WA0002329803 47.321608 / -122.194040PCBs, PAHs, phthalates, inorganics, mercury, semi-VOCs